FCC TEST REPORT

Test report
On Behalf of
Beijing Babel Technology Co.,Ltd.
For
JoneR Translator
Model No.: PH01

FCC ID: 2ARVJ-PH01

Prepared for : **Beijing Babel Technology Co.,Ltd.**
4th Floor,Room 409,Block C I-M-WAY,45Cheng fu Rd.,Haidian District,Beijing,China

Prepared By : **Shenzhen HUAK Testing Technology Co., Ltd.**
1F, B2 Building, Junfeng Zhongcheng Zhizao Innovation Park, Fuhai Street, Bao'an District, Shenzhen City, China

Date of Test: **November 05, 2018~ November 16, 2018**
Date of Report: **November 20, 2018**
Report Number: **HK1811151591E4**

TEST RESULT CERTIFICATION

Applicant's name ..... :	**Beijing Babel Technology Co.,Ltd.**
Address..... :	4th Floor,Room 409,Block C I-M-WAY,45Cheng fu Rd.,Haidian District,Beijing,China
Manufacture's Name ..... :	**Beijing Babel Technology Co.,Ltd.**
Address..... :	4th Floor,Room 409,Block C I-M-WAY,45Cheng fu Rd.,Haidian District,Beijing,China

Product description

Trade Mark ..... :	JoneR
Product name ..... :	JoneR Translator
Model and/or type reference ... :	PH01
Standards ..... :	FCC Rules and Regulations Part 22 & Part 27 ANSI C63.26:2015

This publication may be reproduced in whole or in part for non-commercial purposes as long as the Shenzhen HUAK Testing Technology Co., Ltd. is acknowledged as copyright owner and source of the material. Shenzhen HUAK Testing Technology Co., Ltd. takes no responsibility for and will not assume liability for damages resulting from the reader's interpretation of the reproduced material due to its placement and context.

Date of Test ..... :	
Date (s) of performance of tests..... :	November 05, 2018~ November 16, 2018
Date of Issue ..... :	November 20, 2018
Test Result..... :	**Pass**

Testing Engineer : Gary Qian

(Gary Qian)

Technical Manager : Eden Hu

(Eden Hu)

Authorized Signatory : Jason Zhou

(Jason Zhou)

Revision History

Revision	Issue Date	Revisions	Revised By
000	November 20, 2018	Initial Issue	James Zhou

Contents

1 TEST STANDARDS 5
2 SUMMARY 6
2.1 Product Description 6
2.2 Host System Configuration List and Details 7
2.3 Short description of the Equipment under Test (EUT) 7
2.5 Normal Accessory setting 7
2.6 EUT configuration 7
2.7 Related Submittal(s) / Grant (s) 7
2.8 Modifications 7
3 TEST ENVIRONMENT 8
3.1 Test Facility 8
3.2 Environmental conditions 8
3.3 Test Description 8
3.4 Equipments Used during the Test 10
3.5 Measurement uncertainty 11
4 TEST CONDITIONS AND RESULTS 12
4.1 Output Power 12
4.1.1. Conducted Output Power 12
4.1.2. Radiated Output Power 17
4.2 Peak-to-Average Ratio (PAR) 21
4.3 Occupied Bandwidth and Emission Bandwidth 36
4.4 Band Edge compliance 37
4.5 Spurious Emssion on Antenna Port 39
4.6 Radiated Spurious Emssion 41
4.7 Frequency Stability under Temperature & Voltage Variations 50
5 Test Set up Photos of the EUT 52
6 External Photos of the EUT 52
7 Internal Photos of the EUT 52

1 TEST STANDARDS

The tests were performed according to following standards:
FCC Part 22: Private Land Mobile Radio Services.
FCC Part 27: Miscellaneous Wireless Communications Services.
ANSI C63.26:2015: American National Standard for Compliance Testing of Transmitters Used in Licensed Radio Services.
FCC KDB971168 D01 Power Meas License Digital Systems

2 SUMMARY

2.1 Product Description

EUT	:	JoneR Translator
Model Number	:	PH01
Model Difference Declaration	:	N/A
Test Model	:	PH01
Power Supply	:	DC 3.80V by Battery
Hardware version	:	YK916-MB-V0.2
Software version	:	PH01-L01-S-01-0009
Bluetooth		
Bluetooth Version	:	V4.1
Frequency Range	:	2402-2480MHz
Channel Number	:	79 Channels for Bluetooth V3.0(DSS) 40 Channels for Bluetooth V4.1(DTS)
Modulation Technology	:	GFSK, π/4-DQPSK, 8-DPSK for Bluetooth V3.0(DSS) GFSK for Bluetooth V4.1(DTS)
Data Rates	:	Bluetooth V3.0(DSS): 1~3Mbps Bluetooth V4.1(DTS): 1Mbps
Antenna Type And Gain	:	Internal Antenna -1.5dBi
Wlan		
WLAN	:	Supported IEEE 802.11b/g/n
WLAN FCC Operation Frequency	:	IEEE 802.11b:2412-2462MHz IEEE 802.11g:2412-2462MHz IEEE 802.11n HT20:2412-2462MHz IEEE 802.11n HT40:2422-2452MHz
WLAN Channel Number	:	11 Channels for 2412-2462MHz(IEEE 802.11b/g/n HT20) 7 Channels for 2422-2452MHz(IEEE 802.11n HT40)
WLAN Modulation Technology	:	IEEE 802.11b: DSSS(CCK,DQPSK,DBPSK) IEEE 802.11g: OFDM (64QAM, 16QAM, QPSK, BPSK) IEEE 802.11n: OFDM (64QAM, 16QAM, QPSK, BPSK)
Antenna Type And Gain	:	Internal Antenna -1.5dBi
E-UTRA[US BAND]		
E-UTRA	:	☒FDD Band 5 ☒TDDBand 41
E-UTRA FCC Operation Frequency	:	FDD Band 5(UL: 824 – 848 MHz/DL: 869 – 894 MHz) TDD Band 41(UL: 2555 – 2655 MHz/DL: 2555 – 2655 MHz)
Channel Separation	:	0.1 MHz
WLAN Modulation Technology	:	OFDM (16QAM, QPSK)
Antenna Type And Gain	:	Internal Antenna -3.0dBi

Note: Antenna postion refer to EUT Photos.

2.2 Host System Configuration List and Details

Manufacturer	Description	Model	Serial Number	Certificate

2.3 Short description of the Equipment under Test (EUT)

2.3.1 General Description

EUT is subscriber equipment in the LTE system. LTE frequency band is Band 5 and Band 41.

2.5 Normal Accessory setting

Fully charged battery was used during the test.

2.6 EUT configuration

The following peripheral devices and interface cables were connected during the measurement:

● - supplied by the manufacturer

○ - supplied by the lab

○	Adapter	Model :	GKYPG0200050EU2
		Manufacturer :	GuaiKaiYuan

2.7 Related Submittal(s) / Grant (s)

This submittal(s) (test report) is intended for **FCC ID: 2ARVJ-PH01** filing to comply with FCC Part 22 Rules, and FCC Part 27 Rules.

2.8 Modifications

No modifications were implemented to meet testing criteria.

3 TEST ENVIRONMENT

3.1 Test Facility

Designation Number: CN1229
Test Firm Registration Number: 616276

The 3m-Semi anechoic test site fulfills CISPR 16-1-4 according to ANSI C63.10 and CISPR 16-1-4:2010

3.2 Environmental conditions

During the measurement the environmental conditions were within the listed ranges:

Temperature:	15-35 ° C
Humidity:	30-60 %
Atmospheric pressure:	950-1050mbar

3.3 Test Description

3.3.1 CLR Band (824-849MHz paired with 869-894MHz) <LTE Band 5>

Test Item	FCC RuleNo.	Requirements	Verdict
Effective(Isotropic) RadiatedPower OutputData	§2.1046, §22.913	ERP ≤ 7W;	Pass
Peak-Average Ratio	§2.1046,	Limit≤13dB	Pass
Modulation Characteristics	§2.1047	Digitalmodulation	N/A
Bandwidth	§2.1049	OBW: Nolimit. EBW: Nolimit.	Pass
Band Edges Compliance	§2.1051, §22.917	≤ -13dBm/1%*EBW,in1 MHz bands immediately outside and adjacent to The frequency block.	Pass
Spurious Emission at Antenna Terminals	§2.1051, §22.917	≤ -13dBm/100KHz, from 9 kHz to10th harmonics but outside authorized Operating frequency ranges.	Pass
Frequency Stability	§2.1055, §22.355	≤ ±2.5ppm.	Pass
Radiated spurious emission	§2.1053, §22.917	≤ -13dBm/100KHz.	Pass
NOTE 1: For the verdict, the “N/A” denotes “not applicable”, the “N/T” de notes “not tested”			

3.3.2 BRS/EBS Band (2496-2690MHz paired with 2496-2690MHz) <LTE Band 41>

Test Item	FCC RuleNo.	Requirements	Verdict
Effective (Isotropic) Radiated Power Output Data	§2.1046, §27.50(h)(2)	EIRP ≤ 2W;	Pass
Peak-Average Ratio	§2.1046, §27.50(d)(5)	Limit≤13dB	Pass
Modulation Characteristics	§2.1047	Digitalmodulation	N/A
Bandwidth	§2.1049	OBW: Nolimit. EBW: Nolimit.	Pass
Band Edges Compliance	§2.1051, §27.53(m)(4)	-10dBm(channel edge to 5MHz from the edge); -13dBm(5MHz to XMHz from the edge, where X is greater of 6dB and 26dB BW(99% for ISED)); -25dBm(XMHz away from the edge); In addition, -13dBm(2490.5-2496MHz); -25dBm(Below 2490.5MHz)	Pass
Spurious Emission at Antenna Terminals	§2.1051, §27.53(m) (4)	≤ -25dBm/1MHz, from 9kHz to10th harmonics but outside Band Edges	Pass
Frequency Stability	§2.1055, §27.54	Within authorized bands of operation/frequency block.	Pass
Radiated spurious emission	§2.1053, §27.53(m) (4)	≤ -25dBm/1MHz.	Pass
NOTE 1: For the verdict, the “N/A” denotes “not applicable”, the “N/T” de notes “nottested”			

3.4 Equipments Used during the Test

Item	Equipment	Manufacturer	Model No.	Serial No.	Last Cal.	Cal. Interval
1.	L.I.S.N. Artificial Mains Network	R&S	ENV216	HKE-002	Dec. 28, 2017	1 Year
2.	Receiver	R&S	ESCI 7	HKE-010	Dec. 28, 2017	1 Year
3.	RF automatic control unit	Tonscend	JS0806-2	HKE-060	Dec. 28, 2017	1 Year
4.	Spectrum analyzer	R&S	FSP40	HKE-025	Dec. 28, 2017	1 Year
5.	Spectrum analyzer	Agilent	N9020A	HKE-048	Dec. 28, 2017	1 Year
6.	Preamplifier	Schwarzbeck	BBV 9743	HKE-006	Dec. 28, 2017	1 Year
7.	EMI Test Receiver	Rohde & Schwarz	ESCI 7	HKE-010	Dec. 28, 2017	1 Year
8.	Bilog Broadband Antenna	Schwarzbeck	VULB9163	HKE-012	Dec. 28, 2017	1 Year
9.	Loop Antenna	Schwarzbeck	FMZB 1519 B	HKE-014	Dec. 28, 2017	1 Year
10.	Horn Antenna	Schewarzbeck	9120D	HKE-013	Dec. 28, 2017	1 Year
11.	Pre-amplifier	EMCI	EMC051845 SE	HKE-015	Dec. 28, 2017	1 Year
12.	Pre-amplifier	Agilent	83051A	HKE-016	Dec. 28, 2017	1 Year
13.	EMI Test Software EZ-EMC	Tonscend	JS1120-B	HKE-083	Dec. 28, 2017	N/A
14.	Power Sensor	Agilent	E9300A	HKE-086	Dec. 28, 2017	1 Year
15.	Spectrum analyzer	Agilent	N9020A	HKE-048	Dec. 28, 2017	1 Year
16.	Signal generator	Agilent	N5182A	HKE-029	Dec. 28, 2017	1 Year
17.	Signal Generator	Agilent	83630A	HKE-028	Dec. 28, 2017	1 Year
18.	Shielded room	Shiel Hong	4*3*3	HKE-039	Dec. 28, 2017	3 Year
19.	WIDEBAND RADIO COMMUNICATION	R&S	CMW 500	HKE-027	Dec. 28, 2017	1 Year

3.5 Measurement uncertainty

The data and results referenced in this document are true and accurate. The reader is cautioned that there may be errors within the calibration limits of the equipment and facilities. The measurement uncertainty was calculated for all measurements listed in this test report acc. to ETSI TR 100 028 " Electromagnetic compatibility and Radio spectrum Matters (ERM); Uncertainties in the measurement of mobile radio equipment characteristics" and is documented in the HUAK quality system acc. to DIN EN ISO/IEC 17025. Furthermore, component and process variability of devices similar to that tested may result in additional deviation. The manufacturer has the sole responsibility of continued compliance of the device.

Hereafter the best measurement capability for HUAK is reported:

Test	Range	Measurement Uncertainty	Notes
Radiated Emission	30~1000MHz	3.10 dB	(1)
Radiated Emission	1~18GHz	3.70 dB	(1)
Radiated Emission	18-40GHz	3.90 dB	(1)
Conducted Disturbance	0.15~30MHz	1.63 dB	(1)
Conducted Power	9KHz~18GHz	0.61 dB	(1)
Spurious RF Conducted Emission	9KHz~40GHz	1.22 dB	(1)
Band Edge Compliance of RF Emission	9KHz~40GHz	1.22 dB	(1)
Occuiped Bandwidth	9KHz~40GHz	-	(1)

(1) This uncertainty represents an expanded uncertainty expressed at approximately the 95% confidence level using a coverage factor of k=1.96.

4 TEST CONDITIONS AND RESULTS

4.1 Output Power

TEST APPLICABLE

During the process of testing, the EUT was controlled via R&S Digital Radio Communication tester (CMW500) to ensure max power transmission and proper modulation. This result contains output power and EIRP measurements for the EUT. In all cases, output power is within the specified limits.

4.1.1. Conducted Output Power

TEST CONFIGURATION

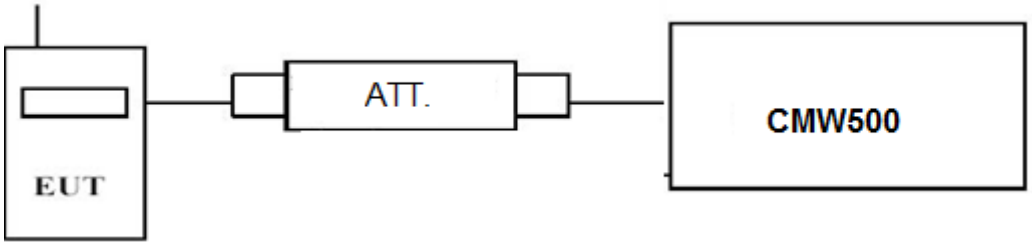

TEST PROCEDURE

Conducted Power Measurement:

a) Place the EUT on a bench and set it in transmitting mode.
b) Connect a low loss RF cable from the antenna port to a CMW500 by an Att.
c) EUT Communicate with CMW500 then selects a channel for testing.
d) Add a correction factor to the display CMW500, and then test.

TEST RESULTS

Pass

Remark:

1. *We were tested all RB Configuration refer 3GPP TS136 521 for each Channel Bandwidth of LTE FDD Band 5 and LTE TDD Band 41;*
2. *please refer to Appendix A*

4.1.2. Radiated Output Power

LIMIT

This is the test for the maximum radiated power from the EUT.
Per Part 27.50(d) (4) specifies, Fixed, mobile, and portable (hand-held) stations operating in the 1710-1755MHz band are limited to 1W EIRP. Fixed stations operating in this band are limited to a maximum antenna height of 10 meters above ground. Mobile and portable stations operating in this band must employ a means for limiting power to the minimum necessary for successful communications.
Per Part 27.50 (c) (10) the following power and antenna height requirements apply to stations transmitting in the 698–746 MHz band, the portable stations (hand-held devices) are limited to 3 watts ERP.
Per Part 27.50(b) (9) specifies, Control stations and mobile stations transmitting in the 746-757 MHz, 776-788 MHz, and 805-806 MHz bands and fixed stations transmitting in the 787-788 MHz and 805-806 MHz bands are limited to 30 watts ERP.
Per Part 27.50(a) (3) specifies, *Mobile and portable stations.* (i) For mobile and portable stations transmitting in the 2305-2315 MHz band or the 2350-2360 MHz band, the average EIRP must not exceed 50 milliwatts within any 1 megahertz of authorized bandwidth, *except that* for mobile and portable stations compliant with 3GPP LTE standards or another advanced mobile broadband protocol that avoids concentrating energy at the edge of the operating band the average EIRP must not exceed 250 milliwatts within any 5 megahertz of authorized bandwidth but may exceed 50 milliwatts within any 1 megahertz of authorized bandwidth. For mobile and portable stations using time division duplexing (TDD) technology, the duty cycle must not exceed 38 percent in the 2305-2315 MHz and 2350-2360 MHz bands. Mobile and portable stations using FDD technology are restricted to transmitting in the 2305-2315 MHz band. Power averaging shall not include intervals in which the transmitter is off.
Per Part 22.913(a) (5) specifies, The ERP of mobile transmitters and auxiliary test transmitters must not exceed 7 watts.
Per Part 27.50(h) (2) specifies, The following power limits shall apply in the BRS and EBS: *Mobile and other user stations.* Mobile stations are limited to 2.0 watts EIRP. All user stations are limited to 2.0 watts transmitter output power.

TEST CONFIGURATION

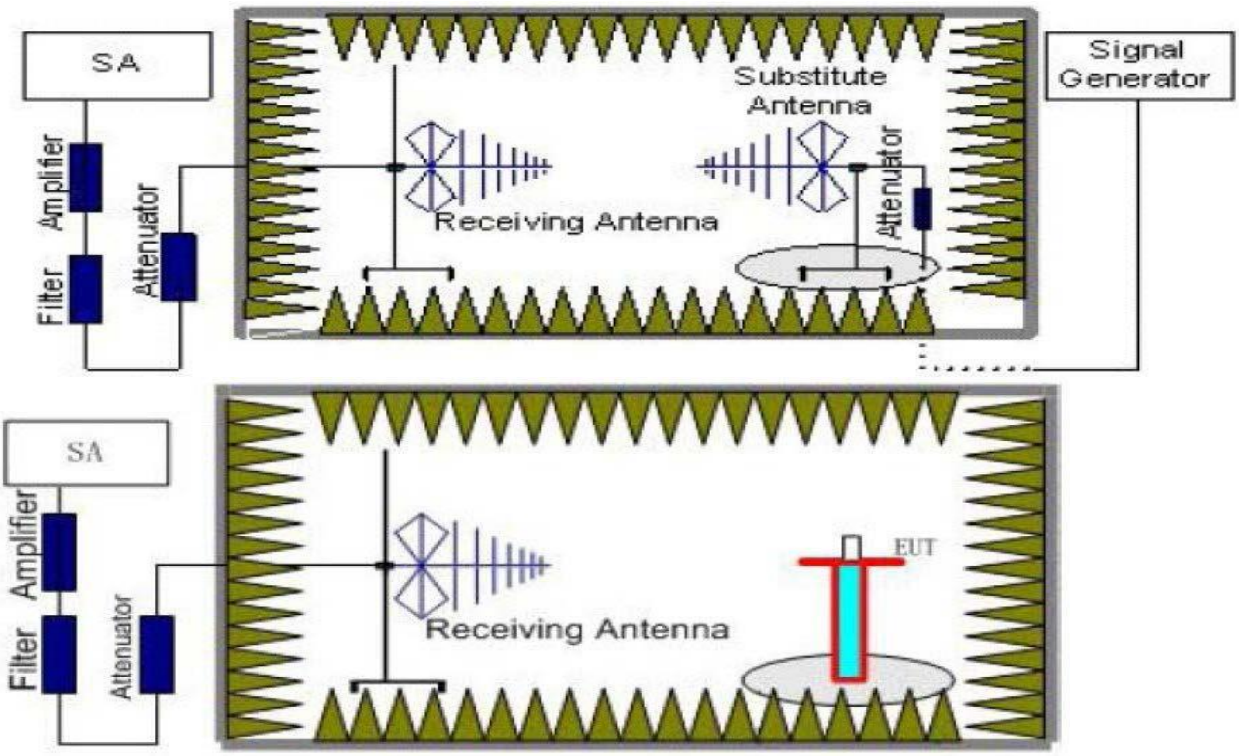

TEST PROCEDURE

1. EUT was placed on a 1.50 meter high non-conductive stand at a 3 meter test distance from the receive antenna. A receiving antenna was placed on the antenna mast 3 meters from the EUT for emission measurements. The height of receiving antenna is 1.50m. Detected emissions were maximized at each frequency by rotating the EUT through 360° and adjusting the receiving antenna polarization. The radiated emission measurements of all transmit frequencies in three channels (High, Middle, Low) were measured with peak detector.
2. A log-periodic antenna or double-ridged waveguide horn antenna shall be substituted in place of the EUT. The log-periodic antenna will be driven by a signal generator and the level will be adjusted till the same power value on the spectrum analyzer or receiver. The level of the spurious emissions can be calculated through the level of the signal generator, cable loss, the gain of the substitution antenna and the reading of the spectrum analyzer or receiver.
3. The EUT is then put into continuously transmitting mode at its maximum power level during the test.Set Test Receiver or Spectrum RBW=1MHz,VBW=3MHz, And the maximum value of the receiver should be recorded as (P_r).
4. The EUT shall be replaced by a substitution antenna. In the chamber, an substitution antenna for the frequency band of interest is placed at the reference point of the chamber. An RF Signal source for the frequency band of interest is connected to the substitution antenna with a cable that has been constructed to not interfere with the radiation pattern of the antenna. A power (P_{Mea}) is applied to the input of the substitution antenna, and adjust the level of the signal generator output until the value of the receiver reach the previously recorded (P_r). The power of signal source (P_{Mea}) is recorded. The test should be performed by rotating the test item and adjusting the receiving antenna polarization.
5. A amplifier should be connected to the Signal Source output port. And the cable should be connect between the Amplifier and the Substitution Antenna. The cable loss (P_{cl}) ,the Substitution Antenna Gain (G_a) and the Amplifier Gain (P_{Ag}) should be recorded after test.
   The measurement results are obtained as described below:
   Power(EIRP)=P_{Mea}+ P_{Ag} - P_{cl} + G_a
6. This value is EIRP since the measurement is calibrated using an antenna of known gain (2.15 dBi) and known input power.
7. ERP can be calculated from EIRP by subtracting the gain of the dipole, ERP = EIRP-2.15dBi.

TEST RESULTS

Radiated Measurement:

Remark:

1. *We were tested all RB Configuration refer 3GPP TS136 521 for each Channel Bandwidth of LTE FDD Band 5 and LTE TDD Band 41; recorded worst case for each Channel Bandwidth of LTE FDD Band 5, and LTE TDD Band 41;.*
2. *EIRP=P_{Mea}(dBm)-P_{cl}(dB)+P_{Ag}(dB)+G_a(dBi)*
3. *ERP = EIRP – 2.15dBi as EIRP by subtracting the gain of the dipole.*
4. *Margin = Emission Level - Limit*
5. *We test the H direction and V direction recorded worst case*

LTE FDD Band 5_Channel Bandwidth 1.4MHz_QPSK

Frequency (MHz)	P_{Mea} (dBm)	P_{cl} (dB)	G_a Antenna Gain (dB)	P_{Ag} (dB)	Correction (dB)	Burst Avergae ERP (dBm)	Limit (dBm)	Margin (dB)	Polarization
824.7	-16.55	3.45	8.45	33.79	2.15	20.09	38.45	-18.33	V
836.5	-16.29	3.49	8.45	33.85	2.15	20.37	38.45	-19.17	V
848.3	-16.09	3.55	8.36	33.88	2.15	20.45	38.45	-19.44	V

LTE FDD Band 5_Channel Bandwidth 3MHz_QPSK

Frequency (MHz)	P_{Mea} (dBm)	P_{cl} (dB)	G_a Antenna Gain (dB)	P_{Ag} (dB)	Correction (dB)	Burst Avergae ERP (dBm)	Limit (dBm)	Margin (dB)	Polarization
825.5	-16.44	3.45	8.45	33.79	2.15	20.20	38.45	-19.01	V
836.5	-15.86	3.49	8.45	33.85	2.15	20.80	38.45	-19.14	V
847.5	-15.61	3.55	8.36	33.88	2.15	20.93	38.45	-19.55	V

LTE FDD Band 5_Channel Bandwidth 5MHz_QPSK

Frequency (MHz)	P_{Mea} (dBm)	P_{cl} (dB)	G_a Antenna Gain (dB)	P_{Ag} (dB)	Correction (dB)	Burst Avergae ERP (dBm)	Limit (dBm)	Margin (dB)	Polarization
826.5	-16.01	3.45	8.45	33.79	2.15	20.63	38.45	-19.24	V
836.5	-16.11	3.49	8.45	33.85	2.15	20.55	38.45	-18.04	V
846.5	-16.07	3.55	8.36	33.88	2.15	20.47	38.45	-19.34	V

LTE FDD Band 5_Channel Bandwidth 10MHz_QPSK

Frequency (MHz)	P_{Mea} (dBm)	P_{cl} (dB)	G_a Antenna Gain (dB)	P_{Ag} (dB)	Correction (dB)	Burst Avergae ERP (dBm)	Limit (dBm)	Margin (dB)	Polarization
829	-16.13	3.45	8.45	33.79	2.15	20.51	38.45	-20.66	V
836.5	-16.25	3.49	8.45	33.85	2.15	20.41	38.45	-18.73	V
844	-16.35	3.55	8.36	33.88	2.15	20.19	38.45	-19.89	V

LTE FDD Band 5_Channel Bandwidth 1.4MHz_16QAM

Frequency (MHz)	P_{Mea} (dBm)	P_{cl} (dB)	G_a Antenna Gain(d B)	P_{Ag} (dB)	Correction (dB)	Burst Avergae ERP (dBm)	Limit (dBm)	Margin (dB)	Polarization
824.7	-16.05	3.45	8.45	33.79	2.15	20.59	38.45	-18.32	V
836.5	-16.64	3.49	8.45	33.85	2.15	20.02	38.45	-18.84	V
848.3	-16.20	3.55	8.36	33.88	2.15	20.34	38.45	-19.28	V

LTE FDD Band 5_Channel Bandwidth 3MHz_16QAM

Frequency (MHz)	P_{Mea} (dBm)	P_{cl} (dB)	G_a Antenna Gain (dB)	P_{Ag} (dB)	Correction (dB)	Burst Avergae ERP (dBm)	Limit (dBm)	Margin (dB)	Polarization
825.5	-16.07	3.45	8.45	33.79	2.15	20.57	38.45	-18.71	V
836.5	-16.55	3.49	8.45	33.85	2.15	20.11	38.45	-19.04	V
847.5	-15.88	3.55	8.36	33.88	2.15	20.66	38.45	-19.51	V

LTE FDD Band 5_Channel Bandwidth 5MHz_16QAM

Frequency (MHz)	P_{Mea} (dBm)	P_{cl} (dB)	G_a Antenna Gain (dB)	P_{Ag} (dB)	Correction (dB)	Burst Avergae ERP (dBm)	Limit (dBm)	Margin (dB)	Polarization
826.5	-16.02	3.45	8.45	33.79	2.15	20.62	38.45	-19.41	V
836.5	-16.33	3.49	8.45	33.85	2.15	20.33	38.45	-18.21	V
846.5	-15.61	3.55	8.36	33.88	2.15	20.93	38.45	-19.31	V

LTE FDD Band 5_Channel Bandwidth 10MHz_16QAM

Frequency (MHz)	P_{Mea} (dBm)	P_{cl} (dB)	G_a Antenna Gain (dB)	P_{Ag} (dB)	Correction (dB)	Burst Avergae ERP (dBm)	Limit (dBm)	Margin (dB)	Polarization
829	-16.49	3.45	8.45	33.79	2.15	20.15	38.45	-20.41	V
836.5	-16.35	3.49	8.45	33.85	2.15	20.31	38.45	-18.78	V
844	-16.28	3.55	8.36	33.88	2.15	20.26	38.45	-20.22	V

LTE TDD Band 41_Channel Bandwidth 5MHz_QPSK

Frequency (MHz)	P_{Mea} (dBm)	P_{cl} (dB)	G_a Antenna Gain(dB)	P_{Ag} (dB)	Burst Average EIRP (dBm)	Limit (dBm)	Margi n (dB)	Polarization
2557.5	-17.87	4.32	6.8	36.13	20.74	30	-7.82	V
2593	-18.05	4.36	6.55	36.26	20.40	30	-8.67	V
2652.5	-17.70	4.51	6.37	36.54	20.70	30	-7.62	V

LTE TDD Band 41_Channel Bandwidth 10MHz_QPSK

Frequency (MHz)	P_{Mea} (dBm)	P_{cl} (dB)	G_a Antenna Gain(dB)	P_{Ag} (dB)	Burst Average EIRP (dBm)	Limit (dBm)	Margin (dB)	Polarization
2560	-18.37	4.32	6.8	36.13	20.24	30	-7.75	V
2593	-18.33	4.36	6.55	36.26	20.12	30	-8.74	V
2650	-18.00	4.51	6.37	36.54	20.40	30	-7.47	V

LTE TDD Band 41_Channel Bandwidth 15MHz_QPSK

Frequency (MHz)	P_{Mea} (dBm)	P_{cl} (dB)	G_a Antenna Gain(dB)	P_{Ag} (dB)	Burst Average EIRP (dBm)	Limit (dBm)	Margin (dB)	Polarization
2562.5	-17.94	4.32	6.8	36.13	20.67	30	-7.6	V
2593	-18.17	4.36	6.55	36.26	20.28	30	-8.42	V
2647.5	-17.90	4.51	6.37	36.54	20.50	30	-7.45	V

LTE TDD Band 41_Channel Bandwidth 20MHz_QPSK

Frequency (MHz)	P_{Mea} (dBm)	P_{cl} (dB)	G_a Antenna Gain(dB)	P_{Ag} (dB)	Burst Average EIRP (dBm)	Limit (dBm)	Margin (dB)	Polarization
2565	-18.42	4.32	6.8	36.13	20.19	30	-7.57	V
2593	-17.47	4.36	6.55	36.26	20.98	30	-8.6	V
2645	-17.89	4.51	6.37	36.54	20.51	30	-7.48	V

LTE TDD Band 41_Channel Bandwidth 5MHz_16QAM

Frequency (MHz)	P_{Mea} (dBm)	P_{cl} (dB)	G_a Antenna Gain(dB)	P_{Ag} (dB)	Burst Average EIRP (dBm)	Limit (dBm)	Margin (dB)	Polarization
2557.5	-18.28	4.32	6.8	36.13	20.33	30	-7.78	V
2593	-18.13	4.36	6.55	36.26	20.32	30	-8.58	V
2652.5	-17.42	4.51	6.37	36.54	20.98	30	-7.59	V

LTE TDD Band 41_Channel Bandwidth 10MHz_16QAM

Frequency (MHz)	P_{Mea} (dBm)	P_{cl} (dB)	G_a Antenna Gain(dB)	P_{Ag} (dB)	Burst Average EIRP (dBm)	Limit (dBm)	Margin (dB)	Polarization
2560	-18.17	4.32	6.8	36.13	20.44	30	-7.73	V
2593	-18.35	4.36	6.55	36.26	20.10	30	-8.45	V
2650	-17.84	4.51	6.37	36.54	20.56	30	-7.37	V

LTE TDD Band 41_Channel Bandwidth 15MHz_16QAM

Frequency (MHz)	P_{Mea} (dBm)	P_{cl} (dB)	G_a Antenna Gain(dB)	P_{Ag} (dB)	Burst Average EIRP (dBm)	Limit (dBm)	Margin (dB)	Polarization
2562.5	-18.42	4.32	6.8	36.13	20.19	30	-7.53	V
2593	-18.05	4.36	6.55	36.26	20.40	30	-8.52	V
2647.5	-17.60	4.51	6.37	36.54	20.80	30	-7.34	V

LTE TDD Band 41_Channel Bandwidth 20MHz_16QAM

Frequency (MHz)	P_{Mea} (dBm)	P_{cl} (dB)	G_a Antenna Gain(dB)	P_{Ag} (dB)	Burst Average EIRP (dBm)	Limit (dBm)	Margin (dB)	Polarization
2565	-17.91	4.32	6.8	36.13	20.70	30	-7.58	V
2593	-18.26	4.36	6.55	36.26	20.19	30	-8.46	V
2645	-18.06	4.51	6.37	36.54	20.34	30	-7.32	V

4.2 Peak-to-Average Ratio (PAR)

LIMIT

The Peak-to-Average Ratio (PAR) of the transmission may not exceed 13 dB.

TEST CONFIGURATION

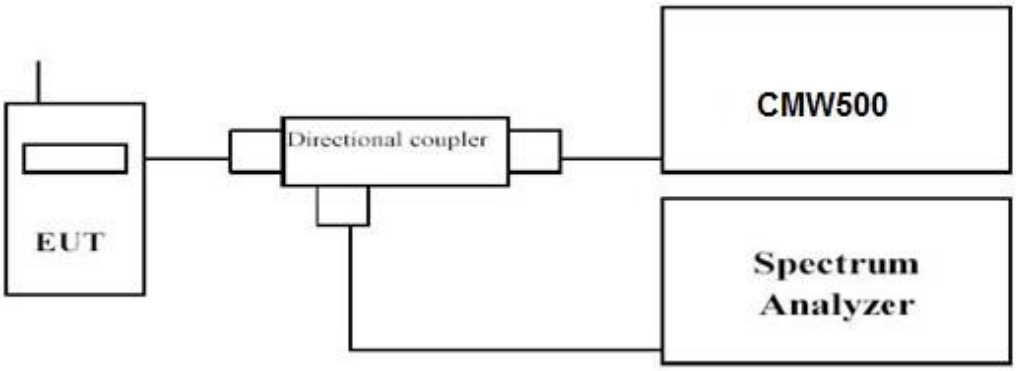

TEST PROCEDURE

1. Refer to instrument's analyzer instruction manual for details on how to use the power statistics/CCDF function;
2. Set resolution/measurement bandwidth ≥ signal's occupied bandwidth;
3. Set the number of counts to a value that stabilizes the measured CCDF curve;
4. Set the measurement interval as follows:
   1). for continuous transmissions, set to 1 ms,
   2). for burst transmissions, employ an external trigger that is synchronized with the EUT burst timing sequence, or use the internal burst trigger with a trigger level that allows the burst to stabilize and set the measurement interval to a time that is less than or equal to the burst duration.
5. Record the maximum PAPR level associated with a probability of 0.1%.

TEST RESULTS

Remark:

1. *We were tested all RB Configuration refer 3GPP TS136 521 for each Channel Bandwidth of LTE FDD Band 5 and LTE TDD Band 41;*
2. *please refer to Appendix B*

4.3 Occupied Bandwidth and Emission Bandwidth

LIMIT

N/A

TEST CONFIGURATION

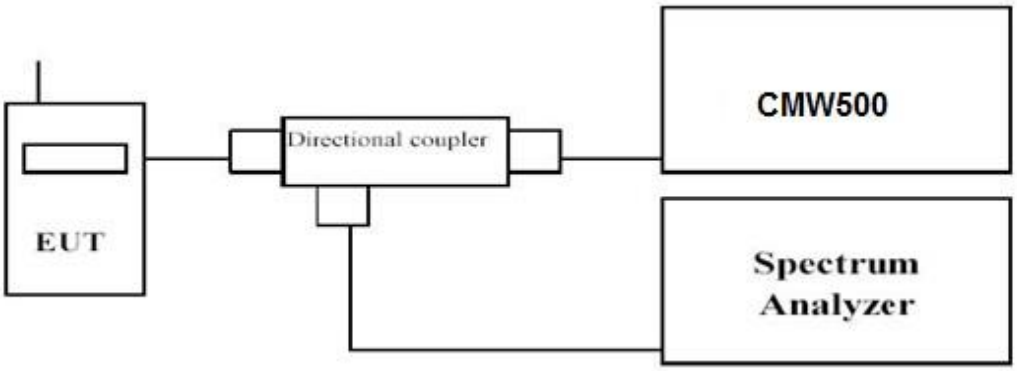

TEST PROCEDURE

The transmitter output was connected to a calibrated coaxial cable and coupler, the other end of which was connected to a spectrum analyzer. The occupied bandwidth was measured with the spectrum analyzer at low, middle and high channel in each band. The -26dBc Emission bandwidth was also measured and recorded. Set RBW was set to about 1% of emission BW, VBW≥3 times RBW.
-26dBc display line was placed on the screen (or 99% bandwidth), the occupied bandwidth is the delta frequency between the two points where the display line intersects the signal trace.

TEST RESULTS

Remark:
1. *We were tested all RB Configuration refer 3GPP TS136 521 for each Channel Bandwidth of LTE FDD Band 5 and LTE TDD Band 41;*
2. *please refer to Appendix C.*

4.4 Band Edge compliance

LIMIT

For LTE FDD Band 5: Per §22.917 (a): For operations in the 814–849 MHz band, the power of any emission outside of the authorized operating frequency ranges must be attenuated below the transmitting power (P) by a factor of at least 43 + 10 log(P) dB.
For LTE TDD Band 41: Per §27.53 (m)(6) Measurement procedure. Compliance with these rules is based on the use of measurement instrumentation employing a resolution bandwidth of 1 megahertz or greater. However, in the 1 MHz bands immediately outside and adjacent to the frequency block a resolution bandwidth of at least one percent of the emission bandwidth of the fundamental emission of the transmitter may be employed; for mobile digital stations, in the 1 megahertz bands immediately outside and adjacent to the frequency block a resolution bandwidth of at least two percent may be employed, except when the 1 megahertz band is 2495-2496 MHz, in which case a resolution bandwidth of at least one percent may be employed. A narrower resolution bandwidth is permitted in all cases to improve measurement accuracy provided the measured power is integrated over the full required measurement bandwidth (i.e. 1 megahertz or 1 percent of emission bandwidth, as specified; or 1 megahertz or 2 percent for mobile digital stations, except in the band 2495-2496 MHz). The emission bandwidth is defined as the width of the signal between two points, one below the carrier center frequency and one above the carrier center frequency, outside of which all emissions are attenuated at least 26 dB below the transmitter power. With respect to television operations, measurements must be made of the separate visual and aural operating powers at sufficiently frequent intervals to ensure compliance with the rules.
(m)(4) For mobile digital stations, the attenuation factor shall be not less than 40 + 10 log (P) dB on all frequencies between the channel edge and 5 megahertz from the channel edge, 43 + 10 log (P) dB on all frequencies between 5 megahertz and X megahertz from the channel edge, and 55 + 10 log (P) dB on all frequencies more than X megahertz from the channel edge, where X is the greater of 6 megahertz or the actual emission bandwidth as defined in paragraph (m)(6) of this section. In addition, the attenuation factor shall not be less that 43 + 10 log (P) dB on all frequencies between 2490.5 MHz and 2496 MHz and 55 + 10 log (P) dB at or below 2490.5 MHz. Mobile Satellite Service licensees operating on frequencies below 2495 MHz may also submit a documented interference complaint against BRS licensees operating on channel BRS Channel 1 on the same terms and conditions as adjacent channel BRS or EBS licensees.Show citation box.

TEST CONFIGURATION

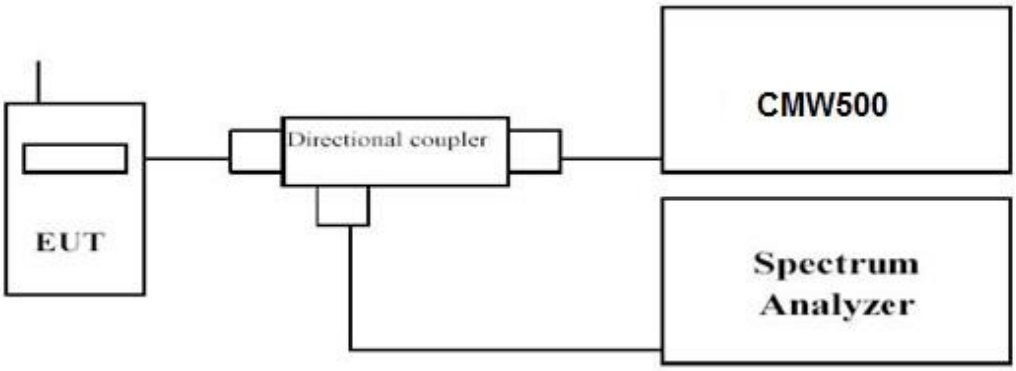

TEST PROCEDURE

1. The transmitter output port was connected to base station.
2. The RF output of EUT was connected to the power meter by RF cable and attenuator, the path loss was compensated to the results for each measurement.
3. Set EUT at maximum power through base station.
4. Select lowest and highest channels for each band and different modulation.
5. Measure Band edge using RMS (Average) detector by spectrum

TEST RESULTS

Remark:

1. *We were tested all RB Configuration refer 3GPP TS136 521 for each Channel Bandwidth of LTE FDD Band 5 and LTE TDD Band 41;*
2. *please refer to Appendix D*

4.5 Spurious Emssion on Antenna Port

LIMIT

For LTE FDD Band 5: Per §22.917 (a): For operations in the 814–849 MHz band, the power of any emission outside of the authorized operating frequency ranges must be attenuated below the transmitting power (P) by a factor of at least 43 + 10 log(P) dB.
For LTE TDD Band 41: Per §27.53 (m)(6) Measurement procedure. Compliance with these rules is based on the use of measurement instrumentation employing a resolution bandwidth of 1 megahertz or greater. However, in the 1 MHz bands immediately outside and adjacent to the frequency block a resolution bandwidth of at least one percent of the emission bandwidth of the fundamental emission of the transmitter may be employed; for mobile digital stations, in the 1 megahertz bands immediately outside and adjacent to the frequency block a resolution bandwidth of at least two percent may be employed, except when the 1 megahertz band is 2495-2496 MHz, in which case a resolution bandwidth of at least one percent may be employed. A narrower resolution bandwidth is permitted in all cases to improve measurement accuracy provided the measured power is integrated over the full required measurement bandwidth (i.e. 1 megahertz or 1 percent of emission bandwidth, as specified; or 1 megahertz or 2 percent for mobile digital stations, except in the band 2495-2496 MHz). The emission bandwidth is defined as the width of the signal between two points, one below the carrier center frequency and one above the carrier center frequency, outside of which all emissions are attenuated at least 26 dB below the transmitter power. With respect to television operations, measurements must be made of the separate visual and aural operating powers at sufficiently frequent intervals to ensure compliance with the rules.
(m)(4) For mobile digital stations, the attenuation factor shall be not less than 40 + 10 log (P) dB on all frequencies between the channel edge and 5 megahertz from the channel edge, 43 + 10 log (P) dB on all frequencies between 5 megahertz and X megahertz from the channel edge, and 55 + 10 log (P) dB on all frequencies more than X megahertz from the channel edge, where X is the greater of 6 megahertz or the actual emission bandwidth as defined in paragraph (m)(6) of this section. In addition, the attenuation factor shall not be less that 43 + 10 log (P) dB on all frequencies between 2490.5 MHz and 2496 MHz and 55 + 10 log (P) dB at or below 2490.5 MHz. Mobile Satellite Service licensees operating on frequencies below 2495 MHz may also submit a documented interference complaint against BRS licensees operating on channel BRS Channel 1 on the same terms and conditions as adjacent channel BRS or EBS licensees.Show citation box.

TEST CONFIGURATION

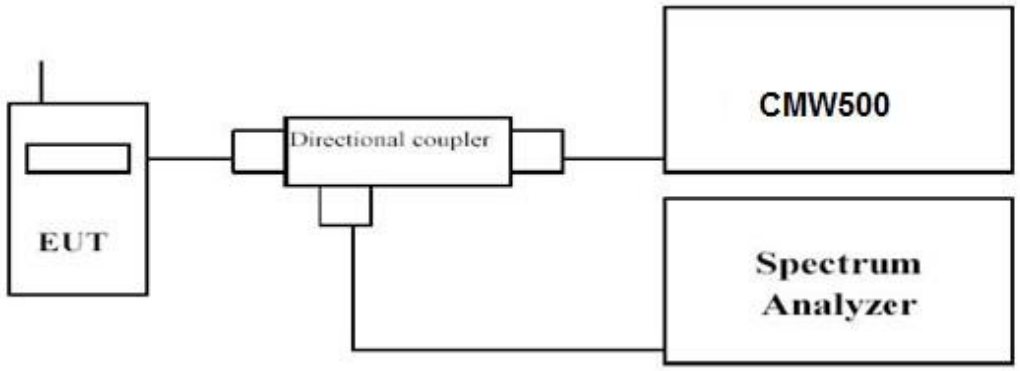

TEST PROCEDURE

The EUT was setup according to ANSI C63.26

a. Place the EUT on a bench and set it in transmitting mode.
b. Connect a low loss RF cable from the antenna port to a spectrum analyzer and CMW500 by a Directional Couple.
c. EUT Communicate with CMW500, then select a channel for testing.
d. Add a correction factor to the display of spectrum, and then test.
e. The resolution bandwidth of the spectrum analyzer was set sufficient scans were taken to show the out of band Emission if any up to10th harmonic.
f. Please refer to following tables for test antenna conducted emissions.

Working Frequency	Sub range (GHz)	RBW	VBW	Sweep time (s)
LTE FDD Band 5	0.000009~0.000015	1KHz	3KHz	Auto
	0.000015~0.03	10KHz	30KHz	Auto
	0.03~26	1 MHz	3 MHz	Auto
LTE TDD Band 41	0.000009~0.000015	1KHz	3KHz	Auto
	0.000015~0.03	10KHz	30KHz	Auto
	0.03~26	1 MHz	3 MHz	Auto

TEST RESULTS

Remark:
1. *We were tested all RB Configuration refer 3GPP TS136 521 for each Channel Bandwidth of LTE FDD Band 5 and LTE TDD Band 41;*
2. *please refer to Appendix E*

4.6 Radiated Spurious Emssion

LIMIT

For LTE FDD Band 5: Per §22.917 (a): For operations in the 814–849 MHz band, the power of any emission outside of the authorized operating frequency ranges must be attenuated below the transmitting power (P) by a factor of at least 43 + 10 log(P) dB.
For LTE TDD Band 41: Per §27.53 (m)(6) Measurement procedure. Compliance with these rules is based on the use of measurement instrumentation employing a resolution bandwidth of 1 megahertz or greater. However, in the 1 MHz bands immediately outside and adjacent to the frequency block a resolution bandwidth of at least one percent of the emission bandwidth of the fundamental emission of the transmitter may be employed; for mobile digital stations, in the 1 megahertz bands immediately outside and adjacent to the frequency block a resolution bandwidth of at least two percent may be employed, except when the 1 megahertz band is 2495-2496 MHz, in which case a resolution bandwidth of at least one percent may be employed. A narrower resolution bandwidth is permitted in all cases to improve measurement accuracy provided the measured power is integrated over the full required measurement bandwidth (i.e. 1 megahertz or 1 percent of emission bandwidth, as specified; or 1 megahertz or 2 percent for mobile digital stations, except in the band 2495-2496 MHz). The emission bandwidth is defined as the width of the signal between two points, one below the carrier center frequency and one above the carrier center frequency, outside of which all emissions are attenuated at least 26 dB below the transmitter power. With respect to television operations, measurements must be made of the separate visual and aural operating powers at sufficiently frequent intervals to ensure compliance with the rules.
(m)(4) For mobile digital stations, the attenuation factor shall be not less than 40 + 10 log (P) dB on all frequencies between the channel edge and 5 megahertz from the channel edge, 43 + 10 log (P) dB on all frequencies between 5 megahertz and X megahertz from the channel edge, and 55 + 10 log (P) dB on all frequencies more than X megahertz from the channel edge, where X is the greater of 6 megahertz or the actual emission bandwidth as defined in paragraph (m)(6) of this section. In addition, the attenuation factor shall not be less that 43 + 10 log (P) dB on all frequencies between 2490.5 MHz and 2496 MHz and 55 + 10 log (P) dB at or below 2490.5 MHz. Mobile Satellite Service licensees operating on frequencies below 2495 MHz may also submit a documented interference complaint against BRS licensees operating on channel BRS Channel 1 on the same terms and conditions as adjacent channel BRS or EBS licensees.Show citation box.

TEST CONFIGURATION

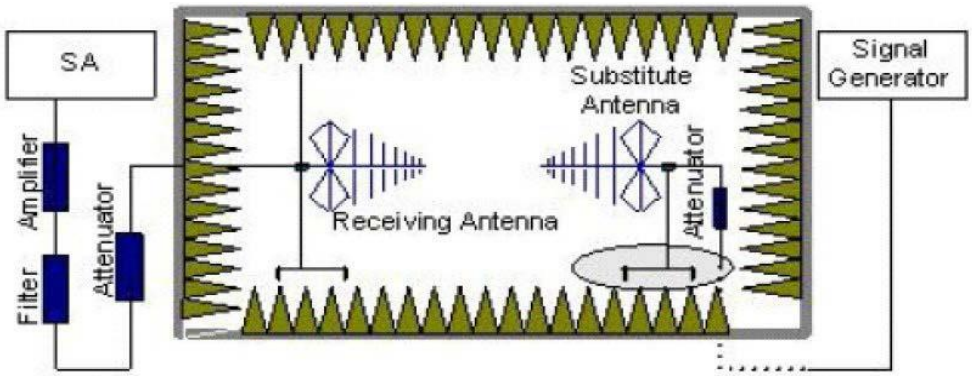

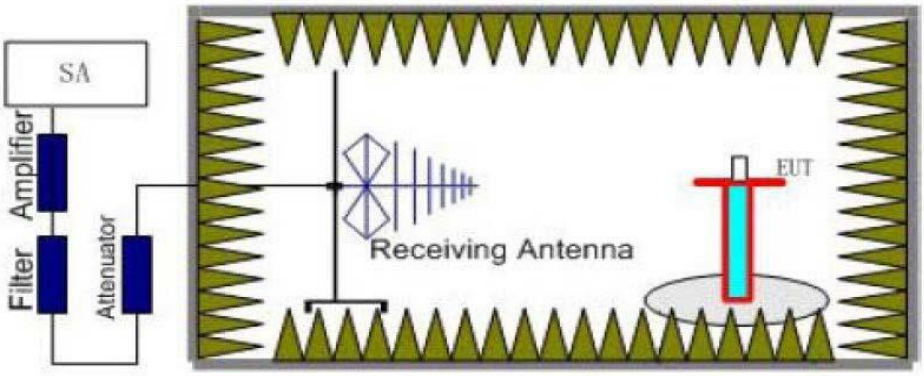

TEST PROCEDURE

1. EUT was placed on a 1.50 meter high non-conductive stand at a 3 meter test distance from the receive antenna. A receiving antenna was placed on the antenna mast 3 meters from the EUT for emission measurements. The height of receiving antenna is 1.50m. Detected emissions were maximized at each frequency by rotating the EUT through 360° and adjusting the receiving antenna polarization. The radiated emission measurements of all transmit frequencies in three channels (High, Middle, Low) were measured with peak detector.
2. A log-periodic antenna or double-ridged waveguide horn antenna shall be substituted in place of the EUT. The log-periodic antenna will be driven by a signal generator and the level will be adjusted till the same power value on the spectrum analyzer or receiver. The level of the spurious emissions can be calculated through the level of the signal generator, cable loss, the gain of the substitution antenna and the reading of the spectrum analyzer or receiver.
3. The EUT is then put into continuously transmitting mode at its maximum power level during the test.Set Test Receiver or Spectrum RBW=1MHz,VBW=3MHz, And the maximum value of the receiver should be recorded as (P_r).
4. The EUT shall be replaced by a substitution antenna. In the chamber, an substitution antenna for the frequency band of interest is placed at the reference point of the chamber. An RF Signal source for the frequency band of interest is connected to the substitution antenna with a cable that has been constructed to not interfere with the radiation pattern of the antenna. A power (P_{Mea}) is applied to the input of the substitution antenna, and adjust the level of the signal generator output until the value of the receiver reach the previously recorded (P_r). The power of signal source (P_{Mea}) is recorded. The test should be performed by rotating the test item and adjusting the receiving antenna polarization.
5. A amplifier should be connected to the Signal Source output port. And the cable should be connect between the Amplifier and the Substitution Antenna. The cable loss (P_{cl}) ,the Substitution Antenna Gain (G_a) and the Amplifier Gain (P_{Ag}) should be recorded after test.
   The measurement results are obtained as described below:
   Power(EIRP)=P_{Mea}+ P_{Ag} - P_{cl} + G_a
6. This value is EIRP since the measurement is calibrated using an antenna of known gain (2.15 dBi) and known input power.
7. ERP can be calculated from EIRP by subtracting the gain of the dipole, ERP = EIRP -2.15dBi.
8. In order to make sure test results more clearly,we set frequency range and sweep time for difference frequency range as follows table:

Working Frequency	Subrange	RBW	VBW	Sweep time (s)
LTE FDD Band 5	0.00009~0.15	1KHz	3KHz	30
	0.00015~0.03	10KHz	30KHz	10
	0.03~1	100KHz	300KHz	10
	1~2	1 MHz	3 MHz	2
	2~5	1 MHz	3 MHz	3
	5~8	1 MHz	3 MHz	3
	8~11	1 MHz	3 MHz	3
LTE TDD Band 41	0.00009~0.15	1KHz	3KHz	30
	0.00015~0.03	10KHz	30KHz	10
	0.03~1	100KHz	300KHz	10
	1~2	1 MHz	3 MHz	2
	2~5	1 MHz	3 MHz	3
	5~8	1 MHz	3 MHz	3
	8~11	1 MHz	3 MHz	3
	11~14	1 MHz	3 MHz	3
	14~18	1 MHz	3 MHz	3
	18~20	1 MHz	3 MHz	2
	20~26.5	1 MHz	3 MHz	2

TEST LIMITS

According to rules specify that the power of any emission outside of the authorized operating frequency ranges must be attenuated below the transmitting power (P) by a factor of at least 43 + 10 log(P) dB.
The specification that emissions shall be attenuated below the transmitter power (P) by at least 43 + 10 log (P) dB, translates in the relevant power range (1 to 0.001 W) to -13 dBm. At 1 W the specified minimum attenuation becomes 43 dB and relative to a 30 dBm (1 W) carrier becomes a limit of -13 dBm. At 0.001 W (0 dBm) the minimum attenuation is 13 dB, which again yields a limit of -13 dBm. In this way a translation of the specification from relative to absolute terms is carried out.

Frequency	Channel	Frequency Range	Verdict
LTE FDD Band 5	Low	9 KHz – 8 GHz	PASS
	Middle	9 KHz – 8 GHz	PASS
	High	9 KHz – 8 GHz	PASS
LTE TDD Band 41	Low	9 KHz – 26.5 GHz	PASS
	Middle	9 KHz – 26.5 GHz	PASS
	High	9 KHz – 26.5 GHz	PASS

TEST RESULTS

Remark:
1. *We tested all RB Configuration refer 3GPP TS136 521 for each Channel Bandwidth of LTE FDD Band 5, and LTE TDD Band 41;*
2. *EIRP=P_{Mea}(dBm)-P_{cl}(dB) +G_a(dBi)*
3. *We were not recorded other points as values lower than limits.*
4. *Margin = EIRP - Limit*

LTE FDD Band 5_Channel Bandwidth 1.4MHz_QPSK_ Low Channel

Frequency (MHz)	PMea (dBm)	Pcl (dB)	Distance	Ga Antenna Gain(dB)	Peak EIRP (dBm)	Limit (dBm)	Margin (dB)	Polarization
1649.4	-46.27	3.86	3	8.56	-41.57	-13	-28.57	H
2474.1	-47.81	4.29	3	6.98	-45.12	-13	-32.12	H
1649.4	-46.24	3.86	3	8.56	-41.54	-13	-28.54	V
2474.1	-50.24	4.29	3	6.98	-47.55	-13	-34.55	V

LTE FDD Band 5_Channel Bandwidth 1.4MHz_QPSK_ Middle Channel

Frequency (MHz)	PMea (dBm)	Pcl (dB)	Distance	Ga Antenna Gain(dB)	Peak EIRP (dBm)	Limit (dBm)	Margin (dB)	Polarization
1673	-43.37	3.9	3	8.58	-38.69	-13	-25.69	H
2509.5	-46.88	4.32	3	6.8	-44.40	-13	-31.40	H
1673	-41.48	3.9	3	8.58	-36.80	-13	-23.80	V
2509.5	-48.03	4.32	3	6.8	-45.55	-13	-32.55	V

LTE FDD Band 5_Channel Bandwidth 1.4MHz_QPSK_ High Channel

Frequency (MHz)	PMea (dBm)	Pcl (dB)	Distance	Ga Antenna Gain(dB)	Peak EIRP (dBm)	Limit (dBm)	Margin (dB)	Polarization
1696.6	-43.03	3.91	3	9.06	-37.88	-13	-24.88	H
2544.9	-48.84	4.32	3	6.65	-46.51	-13	-33.51	H
1696.6	-43.69	3.91	3	9.06	-38.54	-13	-25.54	V
2544.9	-45.22	4.32	3	6.65	-42.89	-13	-29.89	V

LTE FDD Band 5_Channel Bandwidth 3MHz_QPSK_ Low Channel

Frequency (MHz)	PMea (dBm)	Pcl (dB)	Distance	Ga Antenna Gain(dB)	Peak EIRP (dBm)	Limit (dBm)	Margin (dB)	Polarization
1651	-41.91	3.86	3	8.56	-37.21	-13	-24.21	H
2476.5	-48.49	4.29	3	6.98	-45.80	-13	-32.80	H
1651	-44.54	3.86	3	8.56	-39.84	-13	-26.84	V
2476.5	-49.01	4.29	3	6.98	-46.32	-13	-33.32	V

LTE FDD Band 5_Channel Bandwidth 3MHz_QPSK_ Middle Channel

Frequency (MHz)	PMea (dBm)	Pcl (dB)	Distance	Ga Antenna Gain(dB)	Peak EIRP (dBm)	Limit (dBm)	Margin (dB)	Polarization
1673	-45.95	3.9	3	8.58	-41.27	-13	-28.27	H
2509.5	-46.21	4.32	3	6.8	-43.73	-13	-30.73	H
1673	-44.66	3.9	3	8.58	-39.98	-13	-26.98	V
2509.5	-45.77	4.32	3	6.8	-43.29	-13	-30.29	V

LTE FDD Band 5_Channel Bandwidth 3MHz_QPSK_ High Channel

Frequency (MHz)	PMea (dBm)	Pcl (dB)	Distance	Ga Antenna Gain(dB)	Peak EIRP (dBm)	Limit (dBm)	Margin (dB)	Polarization
1695.00	-44.21	3.91	3.00	9.06	-39.06	-13	-26.06	H
2542.50	-45.49	4.32	3.00	6.65	-43.16	-13	-30.16	H
1695.00	-46.24	3.91	3.00	9.06	-41.09	-13	-28.09	V
2542.50	-47.96	4.32	3.00	6.65	-45.63	-13	-32.63	V

LTE FDD Band 5_Channel Bandwidth 5MHz_QPSK_ Low Channel

Frequency (MHz)	PMea (dBm)	Pcl (dB)	Distance	Ga Antenna Gain(dB)	Peak EIRP (dBm)	Limit (dBm)	Margin (dB)	Polarization
1653	-43.48	3.86	3	8.56	-38.78	-13	-25.78	H
2479.5	-49.74	4.29	3	6.98	-47.05	-13	-34.05	H
1653	-42.60	3.86	3	8.56	-37.90	-13	-24.90	V
2479.5	-48.90	4.29	3	6.98	-46.21	-13	-33.21	V

LTE FDD Band 5_Channel Bandwidth 5MHz_QPSK_ Middle Channel

Frequency (MHz)	PMea (dBm)	Pcl (dB)	Distance	Ga Antenna Gain(dB)	Peak EIRP (dBm)	Limit (dBm)	Margin (dB)	Polarization
1673	-45.59	3.9	3	8.58	-40.91	-13	-27.91	H
2509.5	-45.15	4.32	3	6.8	-42.67	-13	-29.67	H
1673	-46.14	3.9	3	8.58	-41.46	-13	-28.46	V
2509.5	-50.87	4.32	3	6.8	-48.39	-13	-35.39	V

LTE FDD Band 5_Channel Bandwidth 5MHz_QPSK_ High Channel

Frequency (MHz)	PMea (dBm)	Pcl (dB)	Distance	Ga Antenna Gain(dB)	Peak EIRP (dBm)	Limit (dBm)	Margin (dB)	Polarization
1693	-41.90	3.91	3	9.06	-36.75	-13	-23.75	H
2539.5	-49.82	4.32	3	6.65	-47.49	-13	-34.49	H
1693	-46.42	3.91	3	9.06	-41.27	-13	-28.27	V
2539.5	-47.11	4.32	3	6.65	-44.78	-13	-31.78	V

LTE FDD Band 5_Channel Bandwidth 10MHz_QPSK_ Low Channel

Frequency (MHz)	PMea (dBm)	Pcl (dB)	Distance	Ga Antenna Gain(dB)	Peak EIRP (dBm)	Limit (dBm)	Margin (dB)	Polarization
1668	-43.73	3.86	3	8.56	-39.03	-13	-26.03	H
2502	-49.39	4.29	3	6.98	-46.70	-13	-33.70	H
1668	-45.20	3.86	3	8.56	-40.50	-13	-27.50	V
2502	-49.80	4.29	3	6.98	-47.11	-13	-34.11	V

LTE FDD Band 5_Channel Bandwidth 10MHz_QPSK_ Middle Channel

Frequency (MHz)	PMea (dBm)	Pcl (dB)	Distance	Ga Antenna Gain(dB)	Peak EIRP (dBm)	Limit (dBm)	Margin (dB)	Polarization
1673	-43.40	3.9	3	8.58	-38.72	-13	-25.72	H
2509.5	-46.03	4.32	3	6.8	-43.55	-13	-30.55	H
1673	-41.41	3.9	3	8.58	-36.73	-13	-23.73	V
2509.5	-48.29	4.32	3	6.8	-45.81	-13	-32.81	V

LTE FDD Band 5_Channel Bandwidth 10MHz_QPSK_ High Channel

Frequency (MHz)	PMea (dBm)	Pcl (dB)	Distance	Ga Antenna Gain(dB)	Peak EIRP (dBm)	Limit (dBm)	Margin (dB)	Polarization
1678	-43.66	3.91	3	9.06	-38.51	-13	-25.51	H
2517	-48.90	4.32	3	6.65	-46.57	-13	-33.57	H
1678	-45.28	3.91	3	9.06	-40.13	-13	-27.13	V
2517	-48.64	4.32	3	6.65	-46.31	-13	-33.31	V

LTE FDD Band 5_Channel Bandwidth 1.4MHz_16QAM _ Low Channel

Frequency (MHz)	PMea (dBm)	Pcl (dB)	Distance	Ga Antenna Gain(dB)	Peak EIRP (dBm)	Limit (dBm)	Margin (dB)	Polarization
1649.4	-43.21	3.86	3	8.56	-38.51	-13	-25.51	H
2474.1	-47.31	4.29	3	6.98	-44.62	-13	-31.62	H
1649.4	-47.46	3.86	3	8.56	-42.76	-13	-29.76	V
2474.1	-51.52	4.29	3	6.98	-48.83	-13	-35.83	V

LTE FDD Band 5_Channel Bandwidth 1.4MHz_16QAM _ Middle Channel

Frequency (MHz)	PMea (dBm)	Pcl (dB)	Distance	Ga Antenna Gain(dB)	Peak EIRP (dBm)	Limit (dBm)	Margin (dB)	Polarization
1673	-44.66	3.9	3	8.58	-39.98	-13	-26.98	H
2509.5	-48.70	4.32	3	6.8	-46.22	-13	-33.22	H
1673	-42.01	3.9	3	8.58	-37.33	-13	-24.33	V
2509.5	-47.90	4.32	3	6.8	-45.42	-13	-32.42	V

LTE FDD Band 5_Channel Bandwidth 1.4MHz_16QAM _ High Channel

Frequency (MHz)	PMea (dBm)	Pcl (dB)	Distance	Ga Antenna Gain(dB)	Peak EIRP (dBm)	Limit (dBm)	Margin (dB)	Polarization
1696.6	-44.01	3.91	3	9.06	-38.86	-13	-25.86	H
2544.9	-45.54	4.32	3	6.65	-43.21	-13	-30.21	H
1696.6	-46.05	3.91	3	9.06	-40.9	-13	-27.9	V
2544.9	-48.04	4.32	3	6.65	-45.71	-13	-32.71	V

LTE FDD Band 5_Channel Bandwidth 3MHz_16QAM _ Low Channel

Frequency (MHz)	PMea (dBm)	Pcl (dB)	Distance	Ga Antenna Gain(dB)	Peak EIRP (dBm)	Limit (dBm)	Margin (dB)	Polarization
1651	-44.57	3.86	3	8.56	-39.87	-13	-26.87	H
2476.5	-48.44	4.29	3	6.98	-45.75	-13	-32.75	H
1651	-46.50	3.86	3	8.56	-41.80	-13	-28.80	V
2476.5	-51.67	4.29	3	6.98	-48.98	-13	-35.98	V

LTE FDD Band 5_Channel Bandwidth 3MHz_16QAM _ Middle Channel

Frequency (MHz)	PMea (dBm)	Pcl (dB)	Distance	Ga Antenna Gain(dB)	Peak EIRP (dBm)	Limit (dBm)	Margin (dB)	Polarization
1673	-46.28	3.9	3	8.58	-41.60	-13	-28.60	H
2509.5	-50.42	4.32	3	6.8	-47.94	-13	-34.94	H
1673	-42.49	3.9	3	8.58	-37.81	-13	-24.81	V
2509.5	-52.46	4.32	3	6.8	-49.98	-13	-36.98	V

LTE FDD Band 5_Channel Bandwidth 3MHz_16QAM _ High Channel

Frequency (MHz)	PMea (dBm)	Pcl (dB)	Distance	Ga Antenna Gain(dB)	Peak EIRP (dBm)	Limit (dBm)	Margin (dB)	Polarization
1695	-46.75	3.91	3	9.06	-41.60	-13	-28.60	H
2542.5	-47.75	4.32	3	6.65	-45.42	-13	-32.42	H
1695	-46.04	3.91	3	9.06	-40.89	-13	-27.89	V
2542.5	-45.54	4.32	3	6.65	-43.21	-13	-30.21	V

LTE FDD Band 5_Channel Bandwidth 5MHz_16QAM _ Low Channel

Frequency (MHz)	PMea (dBm)	Pcl (dB)	Distance	Ga Antenna Gain(dB)	Peak EIRP (dBm)	Limit (dBm)	Margin (dB)	Polarization
1653	-43.63	3.86	3	8.56	-38.93	-13	-25.93	H
2479.5	-50.10	4.29	3	6.98	-47.41	-13	-34.41	H
1653	-46.41	3.86	3	8.56	-41.71	-13	-28.71	V
2479.5	-51.02	4.29	3	6.98	-48.33	-13	-35.33	V

LTE FDD Band 5_Channel Bandwidth 5MHz_16QAM _ Middle Channel

Frequency (MHz)	PMea (dBm)	Pcl (dB)	Distance	Ga Antenna Gain(dB)	Peak EIRP (dBm)	Limit (dBm)	Margin (dB)	Polarization
1673	-42.25	3.9	3	8.58	-37.57	-13	-24.57	H
2509.5	-49.06	4.32	3	6.8	-46.58	-13	-33.58	H
1673	-42.86	3.9	3	8.58	-38.18	-13	-25.18	V
2509.5	-50.02	4.32	3	6.8	-47.54	-13	-34.54	V

LTE FDD Band 5_Channel Bandwidth 5MHz_16QAM _ High Channel

Frequency (MHz)	PMea (dBm)	Pcl (dB)	Distance	Ga Antenna Gain(dB)	Peak EIRP (dBm)	Limit (dBm)	Margin (dB)	Polarization
1693	-42.02	3.91	3	9.06	-36.87	-13	-23.87	H
2539.5	-48.92	4.32	3	6.65	-46.59	-13	-33.59	H
1693	-42.34	3.91	3	9.06	-37.19	-13	-24.19	V
2539.5	-45.43	4.32	3	6.65	-43.10	-13	-30.10	V

LTE FDD Band 5_Channel Bandwidth 10MHz_16QAM _ Low Channel

Frequency (MHz)	PMea (dBm)	Pcl (dB)	Distance	Ga Antenna Gain(dB)	Peak EIRP (dBm)	Limit (dBm)	Margin (dB)	Polarization
1668	-43.36	3.86	3	8.56	-38.66	-13	-25.66	H
2502	-46.14	4.29	3	6.98	-43.45	-13	-30.45	H
1668	-44.62	3.86	3	8.56	-39.92	-13	-26.92	V
2502	-51.95	4.29	3	6.98	-49.26	-13	-36.26	V

LTE FDD Band 5_Channel Bandwidth 10MHz_16QAM _ Middle Channel

Frequency (MHz)	PMea (dBm)	Pcl (dB)	Distance	Ga Antenna Gain(dB)	Peak EIRP (dBm)	Limit (dBm)	Margin (dB)	Polarization
1673	-42.89	3.9	3	8.58	-38.21	-13	-25.21	H
2509.5	-46.08	4.32	3	6.8	-43.60	-13	-30.60	H
1673	-44.46	3.9	3	8.58	-39.78	-13	-26.78	V
2509.5	-51.87	4.32	3	6.8	-49.39	-13	-36.39	V

LTE FDD Band 5_Channel Bandwidth 10MHz_16QAM _ High Channel

Frequency (MHz)	PMea (dBm)	Pcl (dB)	Distance	Ga Antenna Gain(dB)	Peak EIRP (dBm)	Limit (dBm)	Margin (dB)	Polarization
1678	-44.23	3.91	3	9.06	-39.08	-13	-26.08	H
2517	-45.13	4.32	3	6.65	-42.80	-13	-29.80	H
1678	-42.76	3.91	3	9.06	-37.61	-13	-24.61	V
2517	-45.72	4.32	3	6.65	-43.39	-13	-30.39	V

LTE TDD Band 41_Channel Bandwidth 5MHz_QPSK_ Low Channel

Frequency (MHz)	PMea (dBm)	Pcl (dB)	Distance	Ga Antenna Gain(dB)	Peak EIRP (dBm)	Limit (dBm)	Margin (dB)	Polarization
-25	-11.68	-25	-11.68	-25	-11.68	-25	-11.68	-25
-25	-18.39	-25	-18.39	-25	-18.39	-25	-18.39	-25
-25	-12.51	-25	-12.51	-25	-12.51	-25	-12.51	-25
-25	-22.85	-25	-22.85	-25	-22.85	-25	-22.85	-25

LTE TDD Band 41_Channel Bandwidth 5MHz_QPSK_ Middle Channel

Frequency (MHz)	PMea (dBm)	Pcl (dB)	Distance	Ga Antenna Gain(dB)	Peak EIRP (dBm)	Limit (dBm)	Margin (dB)	Polarization
5186	-39.08	7.15	3	9.88	-36.35	-25	-11.35	H
7779	-45.53	8.36	3	11.36	-42.53	-25	-17.53	H
5186	-39.72	7.15	3	9.88	-36.99	-25	-11.99	V
7779	-51.41	8.36	3	11.36	-48.41	-25	-23.41	V

LTE TDD Band 41_Channel Bandwidth 5MHz_QPSK_ High Channel

Frequency (MHz)	PMea (dBm)	Pcl (dB)	Distance	Ga Antenna Gain(dB)	Peak EIRP (dBm)	Limit (dBm)	Margin (dB)	Polarization
5305	-42.39	7.15	3	9.88	-39.66	-25	-14.66	H
7957.5	-46.29	8.36	3	11.36	-43.29	-25	-18.29	H
5305	-41.95	7.15	3	9.88	-39.22	-25	-14.22	V
7957.5	-50.49	8.36	3	11.36	-47.49	-25	-22.49	V

LTE TDD Band 41_Channel Bandwidth 10MHz_QPSK_ Low Channel

Frequency (MHz)	PMea (dBm)	Pcl (dB)	Distance	Ga Antenna Gain(dB)	Peak EIRP (dBm)	Limit (dBm)	Margin (dB)	Polarization
5120	-43.46	7.15	3	9.88	-40.73	-25	-15.73	H
7680	-49.61	8.36	3	11.36	-46.61	-25	-21.61	H
5120	-41.04	7.15	3	9.88	-38.31	-25	-13.31	V
7680	-47.94	8.36	3	11.36	-44.94	-25	-19.94	V

LTE TDD Band 41_Channel Bandwidth 10MHz_QPSK_ Middle Channel

Frequency (MHz)	PMea (dBm)	Pcl (dB)	Distance	Ga Antenna Gain(dB)	Peak EIRP (dBm)	Limit (dBm)	Margin (dB)	Polarization
5186	-40.87	7.15	3	9.88	-38.14	-25	-13.14	H
7779	-50.28	8.36	3	11.36	-47.28	-25	-22.28	H
5186	-39.35	7.15	3	9.88	-36.62	-25	-11.62	V
7779	-48.26	8.36	3	11.36	-45.26	-25	-20.26	V

LTE TDD Band 41_Channel Bandwidth 10MHz_QPSK_ High Channel

Frequency (MHz)	PMea (dBm)	Pcl (dB)	Distance	Ga Antenna Gain(dB)	Peak EIRP (dBm)	Limit (dBm)	Margin (dB)	Polarization
5300	-44.55	7.15	3	9.88	-41.82	-25	-16.82	H
7950	-50.89	8.36	3	11.36	-47.89	-25	-22.89	H
5300	-38.83	7.15	3	9.88	-36.1	-25	-11.1	V
7950	-52.95	8.36	3	11.36	-49.95	-25	-24.95	V

LTE TDD Band 41_Channel Bandwidth 15MHz_QPSK_ Low Channel

Frequency (MHz)	PMea (dBm)	Pcl (dB)	Distance	Ga Antenna Gain(dB)	Peak EIRP (dBm)	Limit (dBm)	Margin (dB)	Polarization
5125	-43.14	7.15	3	9.88	-40.41	-25	-15.41	H
7687.5	-47.64	8.36	3	11.36	-44.64	-25	-19.64	H
5125	-39.00	7.15	3	9.88	-36.27	-25	-11.27	V
7687.5	-48.90	8.36	3	11.36	-45.9	-25	-20.9	V

LTE TDD Band 41_Channel Bandwidth 15MHz_QPSK_ Middle Channel

Frequency (MHz)	PMea (dBm)	Pcl (dB)	Distance	Ga Antenna Gain(dB)	Peak EIRP (dBm)	Limit (dBm)	Margin (dB)	Polarization
5186	-42.93	7.15	3	9.88	-40.41	-25	-15.41	H
7779	-48.30	8.36	3	11.36	-44.64	-25	-19.64	H
5186	-43.67	7.15	3	9.88	-36.27	-25	-11.27	V
7779	-50.60	8.36	3	11.36	-45.9	-25	-20.9	V

LTE TDD Band 41_Channel Bandwidth 15MHz_QPSK_ High Channel

Frequency (MHz)	PMea (dBm)	Pcl (dB)	Distance	Ga Antenna Gain(dB)	Peak EIRP (dBm)	Limit (dBm)	Margin (dB)	Polarization
5295	-42.89	7.15	3	9.88	-40.16	-25	-15.16	H
7942.5	-45.12	8.36	3	11.36	-42.12	-25	-17.12	H
5295	-42.06	7.15	3	9.88	-39.33	-25	-14.33	V
7942.5	-49.34	8.36	3	11.36	-46.34	-25	-21.34	V

LTE TDD Band 41_Channel Bandwidth 20MHz_QPSK_ Low Channel

Frequency (MHz)	PMea (dBm)	Pcl (dB)	Distance	Ga Antenna Gain(dB)	Peak EIRP (dBm)	Limit (dBm)	Margin (dB)	Polarization
5130	-43.06	7.15	3	9.88	-40.33	-25	-15.33	H
7695	-48.88	8.36	3	11.36	-45.88	-25	-20.88	H
5130	-45.25	7.15	3	9.88	-42.52	-25	-17.52	V
7695	-49.53	8.36	3	11.36	-46.53	-25	-21.53	V

LTE TDD Band 41_Channel Bandwidth 20MHz_QPSK_ Middle Channel

Frequency (MHz)	PMea (dBm)	Pcl (dB)	Distance	Ga Antenna Gain(dB)	Peak EIRP (dBm)	Limit (dBm)	Margin (dB)	Polarization
5186	-39.82	7.15	3	9.88	-37.09	-25	-12.09	H
7779	-47.66	8.36	3	11.36	-44.66	-25	-19.66	H
5186	-43.88	7.15	3	9.88	-41.15	-25	-16.15	V
7779	-46.80	8.36	3	11.36	-43.8	-25	-18.8	V

LTE TDD Band 41_Channel Bandwidth 20MHz_QPSK_ High Channel

Frequency (MHz)	PMea (dBm)	Pcl (dB)	Distance	Ga Antenna Gain(dB)	Peak EIRP (dBm)	Limit (dBm)	Margin (dB)	Polarization
5290	-39.17	7.15	3	9.88	-36.44	-25	-11.44	H
7935	-49.17	8.36	3	11.36	-46.17	-25	-21.17	H
5290	-42.90	7.15	3	9.88	-40.17	-25	-15.17	V
7935	-51.78	8.36	3	11.36	-48.78	-25	-23.78	V

LTE TDD Band 41_Channel Bandwidth 5MHz_16QAM_ Low Channel

Frequency (MHz)	PMea (dBm)	Pcl (dB)	Distance	Ga Antenna Gain(dB)	Peak EIRP (dBm)	Limit (dBm)	Margin (dB)	Polarization
5115	-41.65	7.15	3	9.88	-38.92	-25	-13.92	H
7672.5	-49.59	8.36	3	11.36	-46.59	-25	-21.59	H
5115	-43.54	7.15	3	9.88	-40.81	-25	-15.81	V
7672.5	-51.47	8.36	3	11.36	-48.47	-25	-23.47	V

LTE TDD Band 41_Channel Bandwidth 5MHz_16QAM_ Middle Channel

Frequency (MHz)	PMea (dBm)	Pcl (dB)	Distance	Ga Antenna Gain(dB)	Peak EIRP (dBm)	Limit (dBm)	Margin (dB)	Polarization
5186	-41.33	7.15	3	9.88	-38.6	-25	-13.6	H
7779	-48.53	8.36	3	11.36	-45.53	-25	-20.53	H
5186	-42.59	7.15	3	9.88	-39.86	-25	-14.86	V
7779	-45.28	8.36	3	11.36	-42.28	-25	-17.28	V

LTE TDD Band 41_Channel Bandwidth 5MHz_16QAM_ High Channel

Frequency (MHz)	PMea (dBm)	Pcl (dB)	Distance	Ga Antenna Gain(dB)	Peak EIRP (dBm)	Limit (dBm)	Margin (dB)	Polarization
5305	-44.04	7.15	3	9.88	-41.31	-25	-16.31	H
7957.5	-49.01	8.36	3	11.36	-46.01	-25	-21.01	H
5305	-38.90	7.15	3	9.88	-36.17	-25	-11.17	V
7957.5	-47.82	8.36	3	11.36	-44.82	-25	-19.82	V

LTE TDD Band 41_Channel Bandwidth 10MHz_16QAM_ Low Channel

Frequency (MHz)	PMea (dBm)	Pcl (dB	Distance	Ga Antenna Gain(dB)	Peak EIRP (dBm)	Limit (dBm)	Margin (dB)	Polarization
5120	-44.57	7.15	3	9.88	-41.84	-25	-16.84	H
7680	-49.94	8.36	3	11.36	-46.94	-25	-21.94	H
5120	-44.27	7.15	3	9.88	-41.54	-25	-16.54	V
7680	-51.32	8.36	3	11.36	-48.32	-25	-23.32	V

LTE TDD Band 41_Channel Bandwidth 10MHz_16QAM_ Middle Channel

Frequency (MHz)	PMea (dBm)	Pcl (dB	Distance	Ga Antenna Gain(dB)	Peak EIRP (dBm)	Limit (dBm)	Margin (dB)	Polarization
5186.00	-39.90	7.26	3.00	10.03	-37.13	-25	-12.13	H
7779.00	-47.27	8.48	3.00	11.41	-44.34	-25	-19.34	H
5186.00	-43.35	7.26	3.00	10.03	-40.58	-25	-15.58	V
7779.00	-47.44	8.48	3.00	11.41	-44.51	-25	-19.51	V

LTE TDD Band 41_Channel Bandwidth 10MHz_16QAM_ High Channel

Frequency (MHz)	PMea (dBm)	Pcl (dB)	Distance	Ga Antenna Gain(dB)	Peak EIRP (dBm)	Limit (dBm)	Margin (dB)	Polarization
5300	-39.93	7.15	3	9.88	-37.20	-13	-24.20	H
7950	-50.87	8.36	3	11.36	-47.87	-13	-34.87	H
5300	-45.24	7.15	3	9.88	-42.51	-13	-29.51	V
7950	-48.26	8.36	3	11.36	-45.26	-13	-32.26	V

LTE TDD Band 41_Channel Bandwidth 15MHz_16QAM_ Low Channel

Frequency (MHz)	PMea (dBm)	Pcl (dB)	Distance	Ga Antenna Gain(dB)	Peak EIRP (dBm)	Limit (dBm)	Margin (dB)	Polarization
5125	-43.76	7.15	3	9.88	-37.2	-25	-12.2	H
7687.5	-50.76	8.36	3	11.36	-47.87	-25	-22.87	H
5125	-45.38	7.15	3	9.88	-42.51	-25	-17.51	V
7687.5	-47.67	8.36	3	11.36	-45.26	-25	-20.26	V

LTE TDD Band 41_Channel Bandwidth 15MHz_16QAM_ Middle Channel

Frequency (MHz)	PMea (dBm)	Pcl (dB)	Distance	Ga Antenna Gain(dB)	Peak EIRP (dBm)	Limit (dBm)	Margin (dB)	Polarization
5186	-42.20	7.15	3	9.88	-39.47	-25	-14.47	H
7779	-49.34	8.36	3	11.36	-46.34	-25	-21.34	H
5186	-43.58	7.15	3	9.88	-40.85	-25	-15.85	V
7779	-46.04	8.36	3	11.36	-43.04	-25	-18.04	V

LTE TDD Band 41_Channel Bandwidth 15MHz_16QAM_ High Channel

Frequency (MHz)	PMea (dBm)	Pcl (dB)	Distance	Ga Antenna Gain(dB)	Peak EIRP (dBm)	Limit (dBm)	Margin (dB)	Polarization
5295	-41.75	7.15	3	9.88	-39.02	-25	-14.02	H
7942.5	-48.55	8.36	3	11.36	-45.55	-25	-20.55	H
5295	-41.08	7.15	3	9.88	-38.35	-25	-13.35	V
7942.5	-50.58	8.36	3	11.36	-47.58	-25	-22.58	V

LTE TDD Band 41_Channel Bandwidth 20MHz_16QAM_ Low Channel

Frequency (MHz)	PMea (dBm)	Pcl (dB)	Distance	Ga Antenna Gain(dB)	Peak EIRP (dBm)	Limit (dBm)	Margin (dB)	Polarization
5130	-40.22	7.15	3	9.88	-37.49	-25	-12.49	H
7695	-49.43	8.36	3	11.36	-46.43	-25	-21.43	H
5130	-40.81	7.15	3	9.88	-38.08	-25	-13.08	V
7695	-50.00	8.36	3	11.36	-47.00	-25	-22.00	V

LTE TDD Band 41_Channel Bandwidth 20MHz_16QAM_ Middle Channel

Frequency (MHz)	PMea (dBm)	Pcl (dB)	Distance	Ga Antenna Gain(dB)	Peak EIRP (dBm)	Limit (dBm)	Margin (dB)	Polarization
5186	-40.22	7.15	3	9.88	-37.49	-25	-12.49	H
7779	-49.32	8.36	3	11.36	-46.32	-25	-21.32	H
5186	-40.34	7.15	3	9.88	-37.61	-25	-12.61	V
7779	-47.05	8.36	3	11.36	-44.05	-25	-19.05	V

LTE TDD Band 41_Channel Bandwidth 20MHz_16QAM_ High Channel

Frequency (MHz)	PMea (dBm)	Pcl (dB)	Distance	Ga Antenna Gain(dB)	Peak EIRP (dBm)	Limit (dBm)	Margin (dB)	Polarization
5290	-44.14	7.15	3	9.88	-41.41	-25	-16.41	H
7935	-50.33	8.36	3	11.36	-47.33	-25	-22.33	H
5290	-38.98	7.15	3	9.88	-36.25	-25	-11.25	V
7935	-47.61	8.36	3	11.36	-44.61	-25	-19.61	V

4.7 Frequency Stability under Temperature & Voltage Variations

LIMIT

According to FCC §2.1055, §24.235§27.54 and §90.213 requirement, the frequency stability shall be sufficient to ensure that the fundamental emissions stay within the authorized bands of operation and should not exceed 2.5ppm.

TEST CONFIGURATION

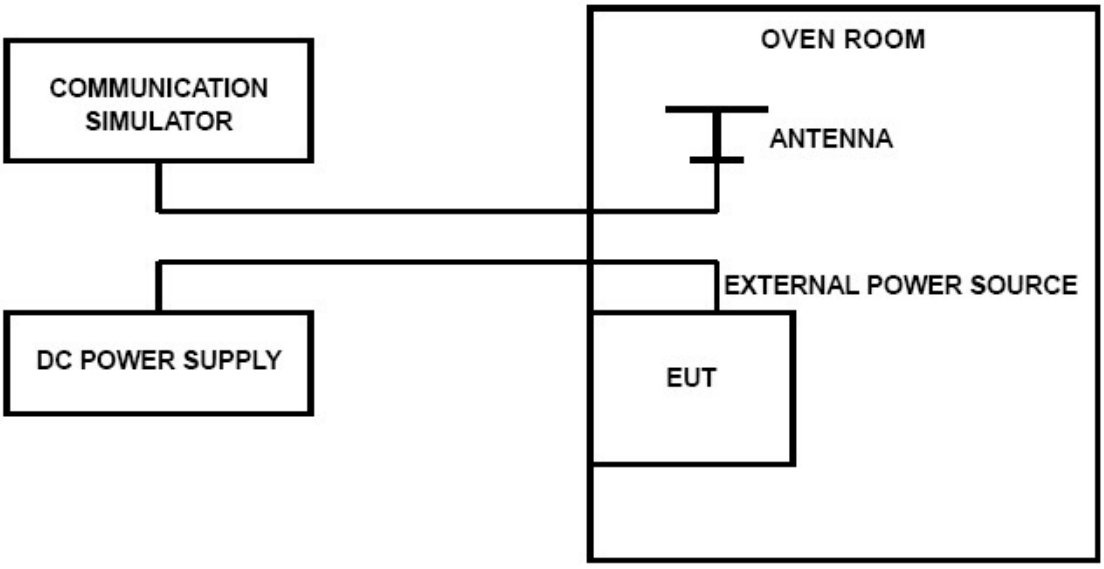

TEST PROCEDURE

The EUT was setup according to ANSI C63.26.

Frequency Stability Under Temperature Variations:
In order to measure the carrier frequency under the condition of AFC lock, it is necessary to make measurements with the EUT in a "call mode". This is accomplished with the use of R&S CMW500 DIGITAL RADIO COMMUNICATION TESTER.
1. Measure the carrier frequency at room temperature.
2. Subject the EUT to overnight soak at -30℃.
3. With the EUT, powered via nominal voltage, connected to the CMW500 and in a simulated call on middle channel for Specific band, measure the carrier frequency. These measurements should be made within 2 minutes of Powering up the EUT, to prevent significant self-warming.
4. Repeat the above measurements at 10℃ increments from -30℃ to +50℃. Allow at least 1.5 hours at each temperature, unpowered, before making measurements.
5. Re-measure carrier frequency at room temperature with nominal voltage. Vary supply voltage from minimum voltage to maximum voltage, in 0.1Volt increments re-measuring carrier frequency at each voltage. Pause at nominal voltage for 1.5 hours unpowered, to allow any self-heating to stabilize, before continuing.
6. Subject the EUT to overnight soak at +50℃.
7. With the EUT, powered via nominal voltage, connected to the CMW500 and in a simulated call on the centre channel, measure the carrier frequency. These measurements should be made within 2 minutes of Powering up the EUT, to prevent significant self-warming.
8. Repeat the above measurements at 10 ℃ increments from +50℃ to -30℃. Allow at least 1.5 hours at each temperature, unpowered, before making measurements
9. At all temperature levels hold the temperature to +/- 0.5℃ during the measurement procedure.

Frequency Stability Under Voltage Variations:
Set chamber temperature to 20℃. Use a variable AC power supply / DC power source to power the EUT and set the voltage to rated voltage. Set the spectrum analyzer RBW low enough to obtain the desired frequency resolution and recorded the frequency.
Reduce the input voltage to specify extreme voltage variation (±15%) and endpoint, record the maximum frequency change.

TEST RESULTS

Remark:

1. *We were tested all RB Configuration refer 3GPP TS136 521 for each Channel Bandwidth of LTE FDD Band 5 and LTE TDD Band 41;*
2. *please refer to Appendix F*

5 Test Set up Photos of the EUT

Please refer to separated files for Test Setup Photos of the EUT.

6 External Photos of the EUT

Please refer to separated files for External Photos of the EUT.

7 Internal Photos of the EUT

Please refer to separated files for Internal Photos of the EUT.

**********End of Report **********