NIIMBOT

Smart Label Printer

Quick Start Guide

NIIMBOT B1

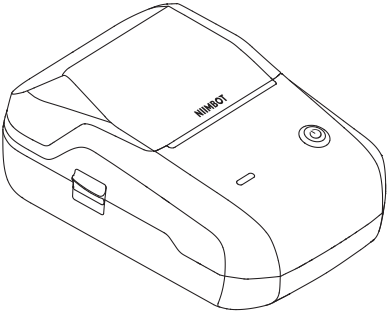

Notice: If the device cannot be turned on, please charge for one hour.

Wuhan Jingchen Intelligent IdentificationTechnology Co., Ltd.
Support Email : service@niimbot.com
Official Website : www.niimbot.net
Office Address : No. 5, Creative Workshop, Creative World,Yezhihu West Road,Hondshan District,Wuhan, China
Production Address : No. 1, Tianyang Road, Chuanlong Avenue, Hengdian Street, Huangpi District, Wuhan City, Hubei Province, China

© 2022 NIIMBOT. All rights reserved.
NIIMBOT is a brand under Wuhan Jingchen Intelligent Identification Technology Ltd.

CONTENTS

01 Package Contents ····· 03

02 Installation ····· 04

03 Installing App ····· 06

04 Connecting and Printing ····· 07

05 Basic Functions ····· 08

06 LED Indicators ····· 09

07 Specifications ····· 10

08 Safety Precautions ····· 11

09 Related statements ····· 13

01

Package Contents

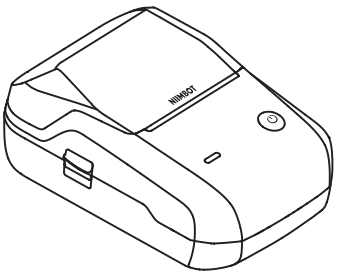

Smart Label Printer *1

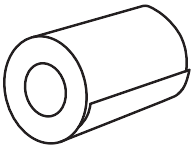

Label Paper Roll *1

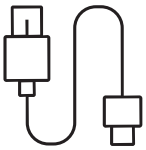

USB Type-C Cable *1

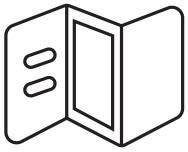

Quick Start Guide *1

02
Installation

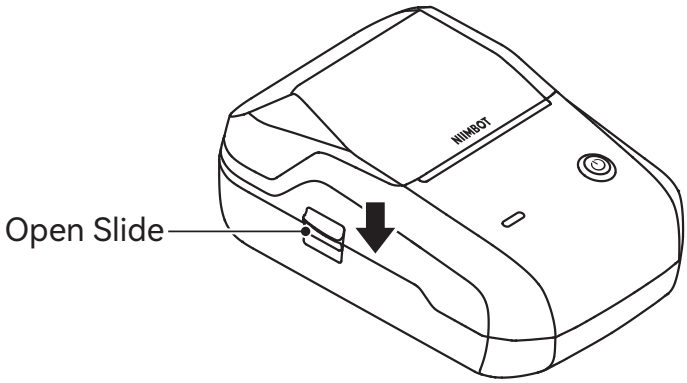

❶ Press the Open Slide on the left to open the paper compartment.

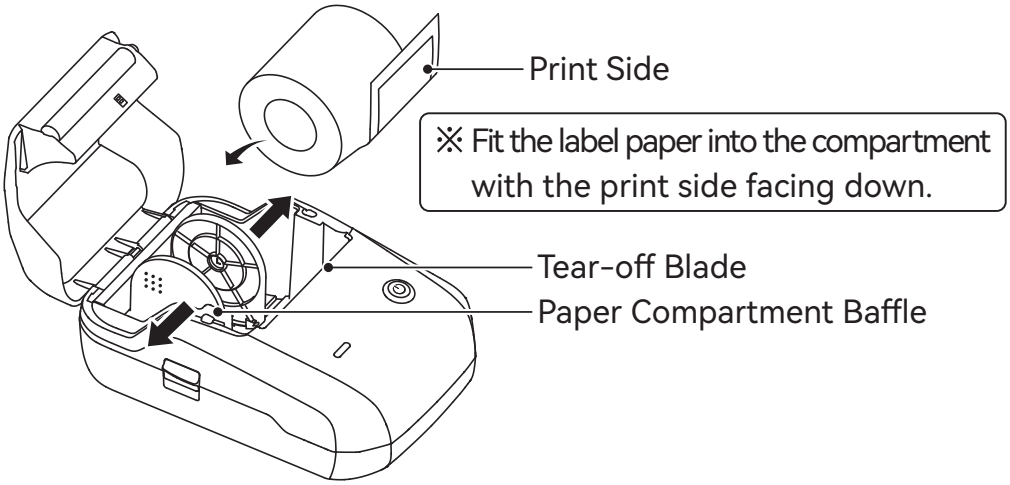

❷ Push the paper compartment baffle to the sides and fit the label paper into the paper compartment with the print side facing down.

⚠ Danger! Beware of shape blade when the paper compartment is open.

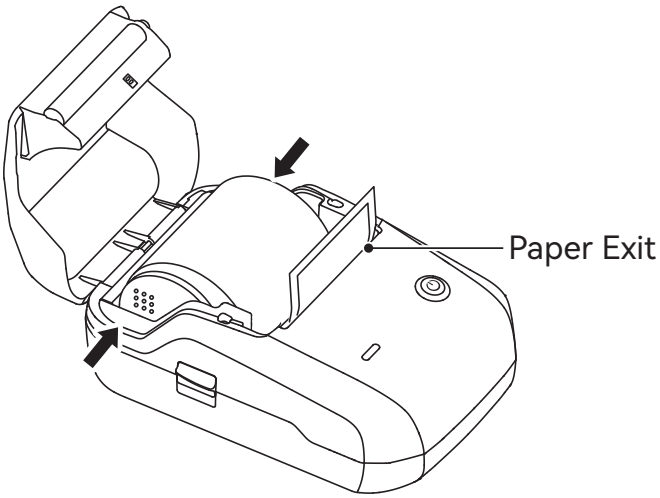

❸ Slide the paper compartment baffle inwards to secure the label paper, pull the first paper out, make sure it sticks out of the paper exit.

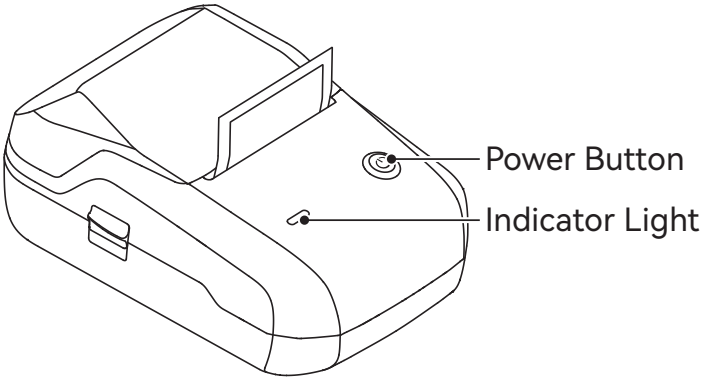

❹ Close the paper compartment and long-press the Power Button to turn the printer on.

03
Installing App

01.Download App

Before using the printer, please install the NIIMBOT app from Google Play or the App Store.

NIIMBOT
Design & Print APP
easy to download and use

Download on the App Store

GET IT ON Google Play

※More information available on the NIIMBOT app.

Sign in to NIIMBOT ▸ Me ▸ Help Center ▸ Hardware

02.Download Desktop Version

You can download and install "NIIMBOT" Desktop version from our official website (www.niimbot.com).

04

Connecting and Printing

❶ Open NIIMBOT app and turn on Bluetooth on your phone.

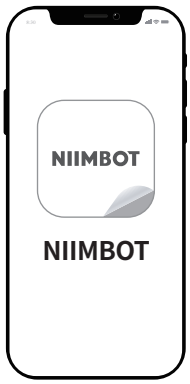

Turn on Bluetooth

❷ On Home, tap Connect smart label printer. Then select device model.

※ Notice: If a PIN code is required, input 0000 or 1234.

❸ After connecting, tap on "Current label template" on the Home tab to enter the label editor.

Special Notes

Images of products, accessories, and the app in this manual are for illustrative purposes only and may be different from actual products. Products are subject to change without prior notice.

05
Basic Functions

Function	Operation
Switch on	Hold down the Power button for three seconds.
Switch off	Hold down the Power button for three seconds when the device is on.
Print history	Press the Power button once when the device is on.
Print a test page	Double-press the Power button when the device is on.

06

LED Indicators

Indicator	Status	Description
Blue	Blinking	Hardware upgrading
Blue	Solid	Standby
Green	Blinking	Printing
Green	Solid	Bluetooth connected
Red	Blinking	Charging
Red	Solid	Paper compartment open/ Out of paper/Paper exit error

07
Specifications

Product	Label Printer	Model	NIIMBOT B1
Dimensions	132*91.2*61.6mm	Weight	293g
Charging Time	3.5 - 4 hours	Input	5V DC, 1A
Battery Capacity	1500mAh	Printing Method	Thermal printing
Printing Resolution	203dpi	Printing Width	20-48mm
Connectivity	Bluetooth、Type-C	Charge	USB Type-C
Transmit Power	4dBm(Maximum)	Operating Temperature	5~40℃

08

Safety Precautions

Please read all the instructions and warnings in this manual carefully before using this product to ensure the proper functioning of the device and your safety.

***Warnings**

	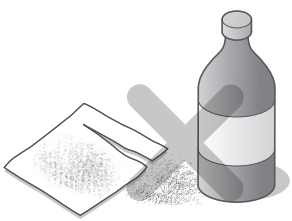	
Don't disassemble the product without authorization. Disassembled products cannot be returned or exchanged.	Do not wipe the product with corrosive chemicals or cleaning agents.	Do not use the product near places with flammable products such as gas stations or fuel depots.

1. Please keep the product and accessories out of the reach of children or they must be used under the supervision and guidance of a guardian;
2. Turn off the power immediately when water gets into the product;
3. Turn off the power immediately in case of any product malfunction;
4. If you want to use a power adapter, always use one that is safe, regulatory-compliant, and compatible;
5. Do not disassemble the product to replace the battery. Improper operation may cause an explosion;

6. The battery contains special protection circuit and device, please do not disassemble the battery without authorization, otherwise it may cause a short circuit or leakage. If electrolyte gets into your eyes, flush with water immediately and seek medical help;
7. Do not expose the product and the power adapter to high temperature or high humidity. Do not put them in water, otherwise a short circuit may occur and the battery may heat up, smoke, deform, damage, or even explode;
8. If smoke or smell comes from the product or the power adapter, please unplug the power adapter immediately and avoid any burns.

09
Related Statements

FCC Statement

This device complies with part 15 of the FCC Rules. Operation is subject to the following two conditions: (1) this device may not cause harmful interference, and (2) this device must accept any interference received, including interference that may cause undesired operation.

Any changes or modifications not expressly approved by the party responsible for compliance could void the user's authority to operate the equipment.

NOTE: This equipment has been tested and found to comply with the limits for a Class B digital device, pursuant to Part 15 of the FCC Rules. These limits are designed to provide reasonable protection against harmful interference in a residential installation. This equipment generates, uses and can radiate radio frequency energy and, if not installed and used in accordance with the instructions, may cause harmful interference to radio communications.

However, there is no guarantee that interference will not occur in a particular installation. If this equipment does cause harmful interference to radio or television reception,which can be determined by turning the equipment off and on, the user is encouraged to try to correct the interference by one or more of the following measures:

-- Reorient or relocate the receiving antenna.

-- Increase the separation between the equipment and receiver.

-- Connect the equipment into an outlet on a circuit different from that to which the receiver is connected.

-- Consult the dealer or an experienced radio/TV technician for help.

The device has been evaluated to meet general RF exposure requirement.The device can be used in portable exposure condition without restriction.

Declaration of conformity

Hereby, Wuhan Jingchen Intelligent Identifification Technology Co., Ltd. declares that this device is in compliance with the essential requirements and other relevant provisions of Radio Equipment Directive (RED) 2014/53/EU. This product can be used across EU member states. This device can be used in European Union.
Hereby, [Wuhan Jingchen Intelligent Identifification Technology Co., Ltd.] declares that the radio equipment type [NIIMBOT B1] is in compliance with Directive 2014/53/EU.
The full text of the EU declaration of conformity is available at the following internet address:http://www.niimbot.com.

Responsible Party：
Company name：AMERICAN JINGCHEN TECHNOLOGY CO., LTD
Address：100 N HOWARD ST STE R, SPOKANE, WA, 99201 USA
Tel:323-5104660
E-mail：zhanghong@niimbot.com