NIIMBOT

Product Manual

Smart Label Printer

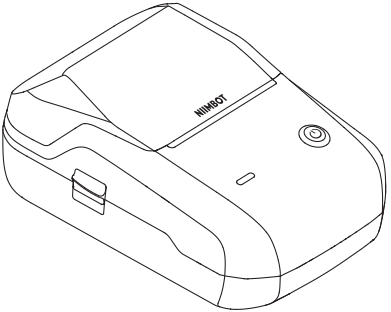

NIIMBOT B1

Notice: If the device cannot be turned on, please charge for one hour.

Wuhan Jingchen Intelligent IdentificationTechnology Co., Ltd.
Support Email : service@niimbot.com
Official Website : www.niimbot.com
Manufacturer's Address : No. 5, Creative Workshop, Creative World,Yezhihu West Road,Hongshan District,Wuhan, China

© 2024 NIIMBOT. All Rights Reserved.
NIIMBOT is a brand under Wuhan Jingchen Intelligent Identification Technology Ltd.

CONTENTS

01 Package Contents 03

02 Installation 04

03 Download software 06

04 Connecting to Print 08

05 Basic operations 09

06 Meaning of Indicator Lights 10

07 Specifications 11

08 Safety Precautions 12

01

Package Contents

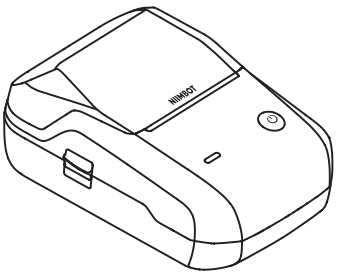

Label Printer *1

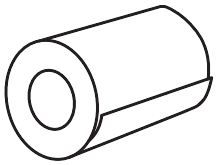

Label Paper Roll *1

USB Type-C Cable *1

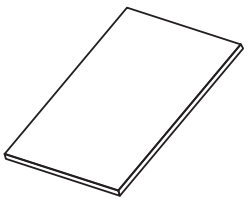

Product Manual *1

02
Installation

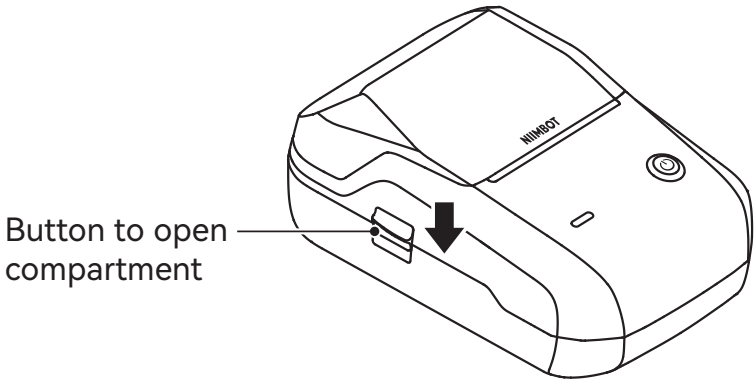

❶ Press the open button on the left-hand side of the printer to open the paper compartment.

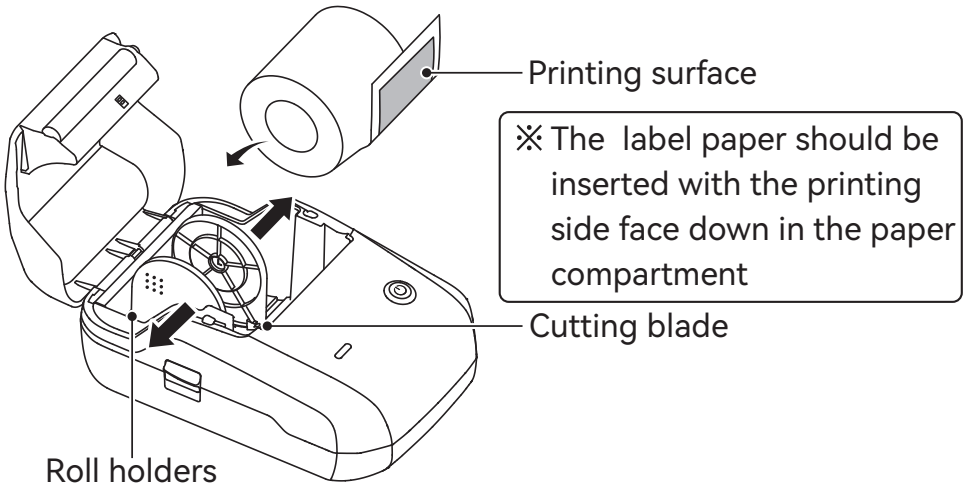

❷ Push the two paper tension plates outward and insert the label paper with the print side down.

⚠ The cutting blade is sharp. Exercise caution when the paper compartment cover is open.

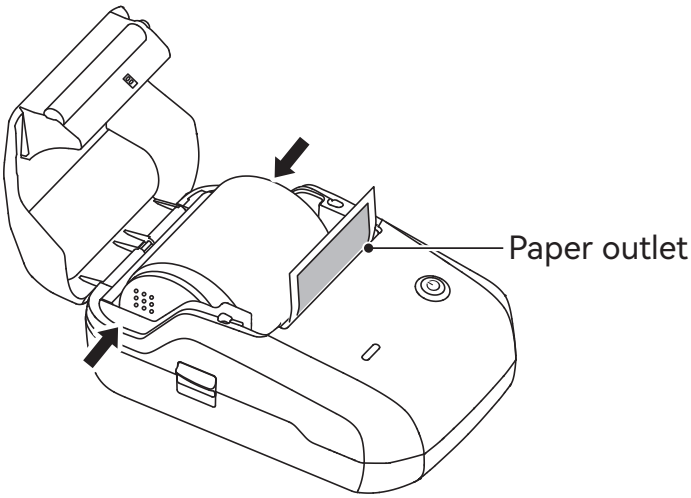

❸ Slide the paper tension plates inward to secure the label paper, then pull the first label to make it protrude out from the paper outlet.

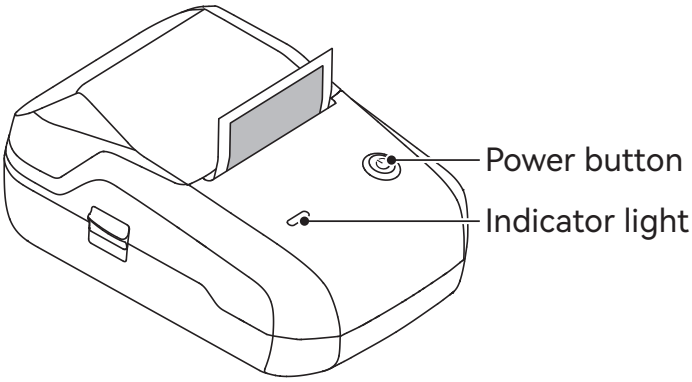

❹ Close the paper compartment, then press and hold the power button to turn on.

03
Download software

01.Download the app

❶ To use this product, please download and install the NIIMBOT app, available from Google Play or the App Store on Apple devices.

NIIMBOT
Design & Print APP
easy to download and use

Download on the App Store

GET IT ON Google Play

※ More instructions can be viewed in the NIIMBOT app

Sign in to NIIMBOT ▸ Me ▸ Help Center ▸ Hardware

❷ We recommend downloading the NIIM app for home use to unlock more functions for household printing.

NIIM
Design & Print APP
easy to download and use

Download on the App Store

GET IT ON Google Play

02.Download computer version

Visit the software downloads page on NIIMBOT's official website (www.niimbot.com) to download and install the computer version of "NIIMBOT ".

※ Note: To connect a computer to this device, please use the officially provided data cable or a data cable that supports data transmission.

04

Connecting to Print

❶ Once the app has downloaded, make sure your phone's Bluetooth is turned on.

※ Note: Location permissions may need to be enabled on Android phones.

Turn on Bluetooth ✔

❷ Open the app and search for Bluetooth devices to connect to.

※ Note: If it asks for a PIN, enter 0000 or 1234 then press OK.

❸ Once successfully connected, go to the Drawing Board.

Note

The illustrations of products, accessories, software interfaces, etc. in this getting started guide are illustrative in nature and for reference only. Due to product updates and upgrades, the physical product may differ slightly from the illustrations. Please refer to the actual physical product in such case. The product is subject to technical improvements without notice.

05

Basic operations

Function	Process
Turn on	Press and hold the power button for three seconds
Turn off	Press and hold the power button for three seconds while powered on
Feed paper	Press the power button once while powered on
Print testing page	Press the power button twice while powered on

06

Meaning of Indicator Lights

Color	Status	Meaning
Blue	Flashing	Upgrading firmware
Blue	Solid	Standby
Green	Flashing	Printing
Green	Solid	Bluetooth connected
Red	Flashing	Charging
Red	Solid	The paper compartment is not closed;out of paper; or paper output error

07

Specifications

Product	Label Printer	Model	NIIMBOT B1
Dimensions	132*91*62mm	Weight	293g
Charging Time	3.5 - 4 hours	Input	5V DC, 1A
Battery Capacity	1500mAh	Printing Method	Thermal printing
Printing Resolution	203dpi	Printing Width	20-48mm
Connectivity	Bluetooth, Type-C	Charge	Type-C
Transmit Power	4dBm(Maximum) for CE	Operating Temperature	5~40℃
Bluetooth	2402-2480MHz	RFID	13.56MHz

08
Safety Precautions

Read all instructions and warnings in this guide carefully before using the product to ensure proper and safe use of the product and to avoid personal injury or damage to property.

***Warning**

Do not disassemble the product yourself. No returns or exchanges will be authorized for disassembled products.	Do not use corrosive chemical products or cleaners to wipe down the product.	Do not use the product in the vicinity of flammable substances such as in gas stations, fuel depots, etc.

1. Keep the product and accessories in a safe place that is inaccessible to children, or only allow use under the supervision of a guardian.
2. Immediately disconnect the product from the power source if the product enters water.
3. Immediately disconnect the product if the device malfunctions.
4. If you use a power adapter to charge (or power) the device, you must purchase an adapter that is safe, compliant, and meets the standards.
5. Do not disassemble the product to replace the battery yourself. Incorrectly replacing the battery can result in an explosion.

6. The battery contains special protective circuitry and devices. Do not disassemble the battery as this may cause short circuits or electrolyte leakage. If electrolytes accidentally enter your eye, rinse immediately with clean water and seek medical advice.
7. Do not expose the appliance or power adapter to high-temperature or high-humidity environments, or put in water, to prevent short circuits that can cause the battery to become hot, smoke, deform, get damaged or even explode.
8. Disconnect the power adapter immediately if you notice either smoke or a smell coming from the product or the power adapter, taking care to avoid burns.

***Important**

Please purchase the version of the product that matches your region or country of use through the NIIMBOT official store or a NIIMBOT authorized sales agent. Purchasing the product through other channels may mean you buy a pirated product or a product not adapted to your region or country of use which may lead to usage issues. In such cases, NIIMBOT may be unable to provide you with further assistance.

FCC Statement

NOTE: This equipment has been tested and found to comply with the limits for a Class B digital device, pursuant to part 15 of the FCC Rules. These limits are designed to provide reasonable protection against harmful interference in a residential installation. This equipment generates, uses and can radiate radio frequency energy and, if not installed and used in accordance with the instructions, may cause harmful interference to radio communications. However, there is no guarantee that interference will not occur in a particular installation. If this equipment does cause harmful interference to radio or television reception, which can be determined by turning the equipment off and on, the user is encouraged to try to correct the interference by one or more of the following measures:

- Reorient or relocate the receiving antenna.
- Increase the separation between the equipment and receiver.
- Connect the equipment into an outlet on a circuit different from that to which the receiver is connected.
- Consult the dealer or an experienced radio/TV technician for help

Changes or modifications not expressly approved by the party responsible for compliance could void the user's authority to operate the equipment.

This device complies with Part 15 of the FCC Rules. Operation is subject to the following two conditions:
(1) this device may not cause harmful interference, and (2) this device must accept any interference received, including interference that may cause undesired operation.

FCC RF Exposure Statement:
This equipment complies with FCC radiation exposure limits set forth for an uncontrolled environment. This equipment can be used in portable exposure conditions.