NIIMBOT

Product Manual

Smart Label Printer

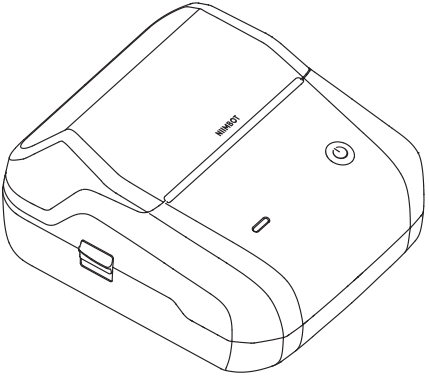

NIIMBOT B31

Notice: If the device cannot be turned on, please charge for one hour.

Wuhan Jingchen Intelligent IdentificationTechnology Co., Ltd.
Support Email : service@niimbot.com
Official Website : www.niimbot.com
Manufacturer's Address : No. 5, Creative Workshop, Creative World,Yezhihu West Road,Hongshan District,Wuhan, China

© 2024 NIIMBOT. All Rights Reserved.
NIIMBOT is a brand under Wuhan Jingchen Intelligent Identification Technology Ltd.

01

Package Contents

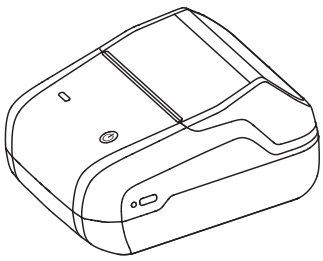

Smart Label Printer *1

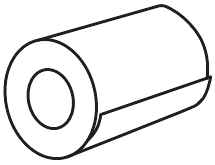

Label Paper Roll *1

USB Type-C Cable *1

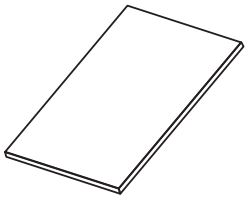

Product Manual *1

02
Installation

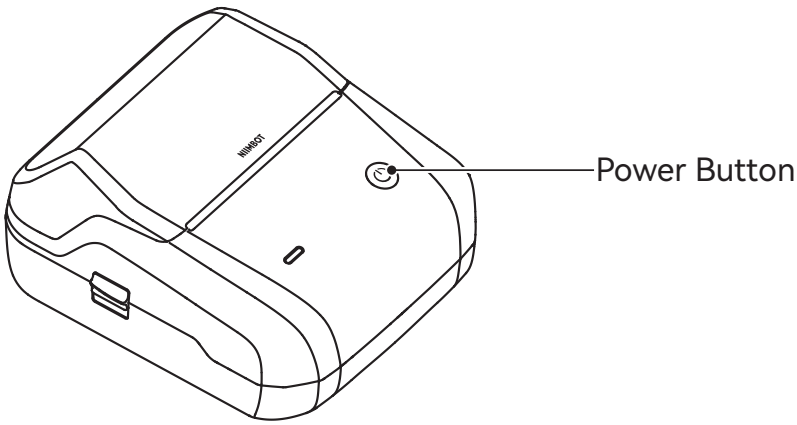

❶ Press and hold the Power button for three seconds to switch on the printer.

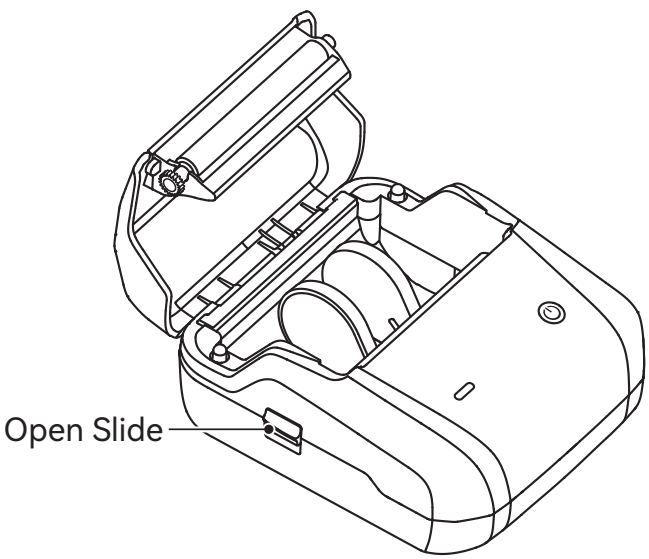

❷ Press the Open Slide on the left to open the paper compartment.

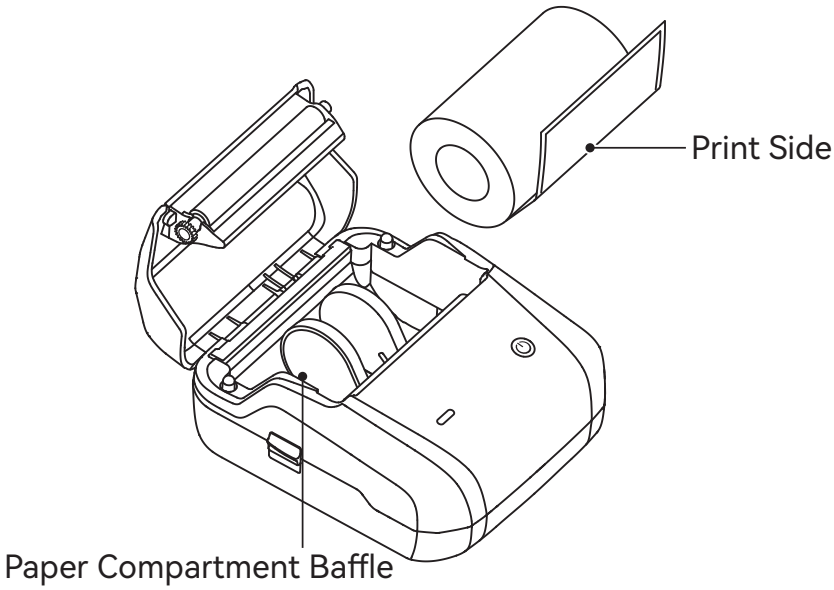

❸ Push the paper compartment baffle to the sides and fit the label paper into the paper compartment with the print side facing down.

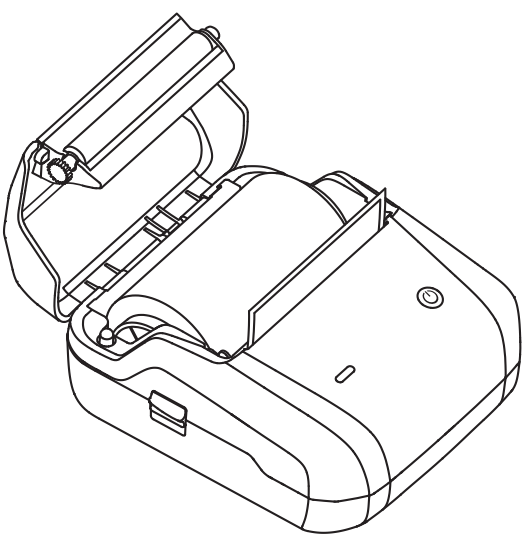

❹ Slide the paper compartment baffle inwards to secure the label paper, pull the first paper out, make sure it sticks out of the paper exit.

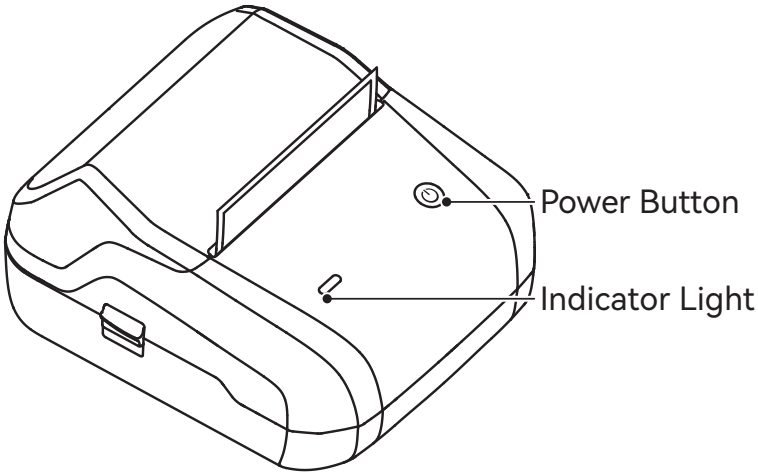

❺ Close the paper compartment and long-press the Power Button to turn the printer on.

03
Installing App

01.Download App

Before using the printer, please install the NIIMBOT app from Google Play or the App Store.

NIIMBOT
Design & Print APP
easy to download and use

Download on the App Store

GET IT ON Google Play

※ More information available on the NIIMBOT app.

Sign in to NIIMBOT ▸ Me ▸ Help Center ▸ Hardware

02.Download Desktop Version

You can download and install "NIIMBOT" Desktop version from our official website (www.niimbot.com).

※ Notice: In case you need to connect your computer to the device, please use the original data cable or a data cable that supports data transfer.

04

Connecting and Printing

❶ After downing the APP, make sure your phone's Bluetooth is on.

※ Note: For Android phones, location permission must be granted.

Turn on Bluetooth

❷ Open the APP, search and connect to the device through Bluetooth.

※ Notice: If a PIN code is required, input 0000 or 1234.

❸ After connecting, enter the "Canvas" page to edit.

Special Notes

Images of products, accessories, and the app in this manual are for illustrative purposes only and may be different from actual products. Products are subject to change without prior notice.

05

Product Description

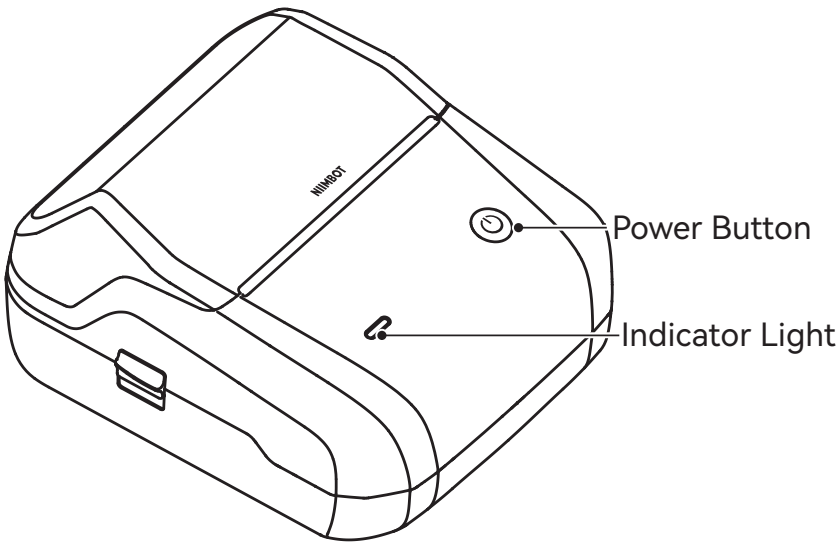

Button Function Description

Function	Operation
Switch on	Hold down the Power button for three seconds.
Switch off	Hold down the Power button for three seconds when the device is on.
Feeding Paper	Press the Power button once when the device is on.
Print a test page	Double-press the Power button when the device is on.

Indicator Light Description

Color	Status	Description
Blue	Solid On	Powered on, but not connected
	Blinking Fast	Firmware upgrading
Green	Solid On	Bluetooth connected
	Blinking Fast	Printing
Red	Solid On	Device abnormality

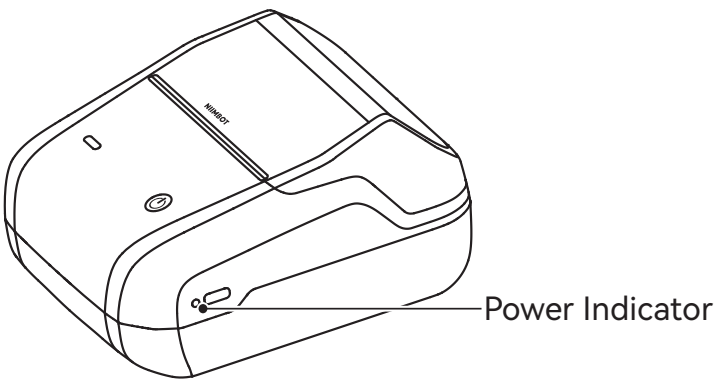

Power Indicator Description

Color	Status	Description
White	Blinking Slowly	Charging
	Solid On	Fully Charged and Connected to Power
	Blinking Fast	Low Battery

06

Specifications

Product	Label Printer	Model	NIIMBOT B31
Dimensions	132*118*69mm	Weight	308g
Charging Time	3 - 4 hours	Input	5V DC, 1A
Battery Capacity	1500mAh	Printing Method	Thermal printing
Printing Resolution	203dpi	Printing Width	72mm
Connectivity	Bluetooth, Type-C	Charge	Type-C
		Operating Temperature	0℃ - 45℃

07
Safety Precautions

Please read all the instructions and warnings in this manual carefully before using this product to ensure the proper functioning of the device and your safety.

***Warnings**

	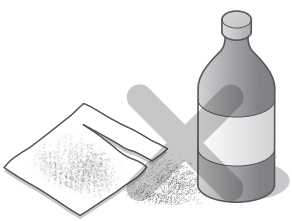	
Don't disassemble the product without authorization. Disassembled products cannot be returned or exchanged.	Do not wipe the product with corrosive chemicals or cleaning agents.	Do not use the product near places with flammable products such as gas stations or fuel depots.

1. Please keep the product and accessories out of the reach of children or they must be used under the supervision and guidance of a guardian;
2. Turn off the power immediately when water gets into the product;
3. Turn off the power immediately in case of any product malfunction;
4. If you want to use a power adapter, always use one that is safe, regulatory-compliant, and compatible;
5. Do not disassemble the product to replace the battery. Improper operation may cause an explosion;

6. The battery contains special protection circuit and device, please do not disassemble the battery without authorization, otherwise it may cause a short circuit or leakage. If electrolyte gets into your eyes, flush with water immediately and seek medical help;
7. Do not expose the product and the power adapter to high temperature or high humidity. Do not put them in water, otherwise a short circuit may occur and the battery may heat up, smoke, deform, damage, or even explode;
8. If smoke or smell comes from the product or the power adapter, please unplug the power adapter immediately and avoid any burns.

*Important

1. Please use NIIMBOT label paper to prevent print quality issues or printhead damage;
2. The product comes with a built-in rechargeable battery. Do not throw it into fire or heat it. Do not charge, use or store it in a hot place, as this may cause overheating, fire or explosion.
3. Please purchase our product models designed for specific your country or region through the official NIIMBOT store or NIIMBOT authorized channels. Purchasing a NIIMBOT product through an unauthorized source may expose you to piracy risks, compatibility issues with your local environment, or other factors that could affect the product's proper functionality. Additionally, NIIMBOT may not be able to provide support for issues related to products obtained through unauthorized channels.

Dichiarazione di conformità

Con la presente, Wuhan Jingchen Intelligent Identification Technology Co., Ltd. dichiara che questo dispositivo è conforme ai requisiti essenziali e alle altre disposizioni pertinenti della Direttiva sulle apparecchiature radio (RED) 2014/53/UE. Questo prodotto può essere utilizzato in tutti gli Stati membri dell'Unione Europea. Questo dispositivo può essere utilizzato nell'Unione Europea.
Con la presente, [Wuhan Jingchen Intelligent Identification Technology Co., Ltd.] dichiara che il tipo di apparecchiatura radio [NIIMBOT B31] è conforme alla Direttiva 2014/53/UE. Il testo completo della dichiarazione di conformità dell'UE è disponibile sul seguente sito web: http://www.niimbot.com.

American Responsible Party

Company name : AMERICAN JINGCHEN TECHNOLOGY CO., LTD
Address : 100 N HOWARD ST STE R, SPOKANE, WASHINGTON, 99201 USA
Tel : 323-510-4660
E-mail : zhanghong@niimbot.com

© 2024 NIIMBOT. All Rights Reserved.
NIIMBOT is a brand under Wuhan Jingchen Intelligent Identification Technology Ltd.

NIIMBOT

FCC Statement

This device complies with part 15 of the FCC Rules. Operation is subject to the following two conditions: (1) this device may not cause harmful interference, and (2) this device must accept any interference received, including interference that may cause undesired operation.

Any changes or modifications not expressly approved by the party responsible for compliance could void the user's authority to operate the equipment.

NOTE: This equipment has been tested and found to comply with the limits for a Class B digital device, pursuant to Part 15 of the FCC Rules. These limits are designed to provide reasonable protection against harmful interference in a residential installation. This equipment generates, uses and can radiate radio frequency energy and, if not installed and used in accordance with the instructions, may cause harmful interference to radio communications.

However, there is no guarantee that interference will not occur in a particular installation. If this equipment does cause harmful interference to radio or television reception,which can be determined by turning the equipment off and on, the user is encouraged to try to correct the interference by one or more of the following measures:

-- Reorient or relocate the receiving antenna.

-- Increase the separation between the equipment and receiver.

-- Connect the equipment into an outlet on a circuit different from that to which the receiver is connected.

-- Consult the dealer or an experienced radio/TV technician for help.

The device has been evaluated to meet general RF exposure requirement.The device can be used in portable exposure condition without restriction.

Konformitätserklärung

Hiermit erklärt Wuhan Jingchen Intelligent Identification Technology Co., Ltd. dass dieses Gerät mit den grundlegenden Anforderungen und anderen relevanten Bestimmungen der Funkanlagenrichtlinie (RED) 2014/53/EU übereinstimmt. Dieses Produkt kann in allen EU-Mitgliedstaaten verwendet werden. Dieses Gerät kann in der Europäischen Union verwendet werden.
Hiermit erklärt [Wuhan Jingchen Intelligent Identification Technology Co., Ltd.], dass das Funkgerät des Typs [NIIMBOT B31] mit der Richtlinie 2014/53/EU konform ist. Der vollständige Text der EU-Konformitätserklärung ist auf der folgenden Website verfügbar: http://www.niimbot.com.

Déclaration de conformité

Par la présente, Wuhan Jingchen Intelligent Identification Technology Co, Ltd déclare que cet appareil est conforme aux exigences essentielles et aux autres dispositions pertinentes de la directive relative aux équipements hertziens (RED) 2014/53/UE. Ce produit peut être utilisé dans tous les États membres de l'Union européenne. Cet appareil peut être utilisé dans l'Union européenne.
Par la présente, [Wuhan Jingchen Intelligent Identification Technology Co., Ltd] déclare que l'équipement radio de type [NIIMBOT B31] est conforme à la directive 2014/53/UE. Le texte intégral de la déclaration de conformité de l'UE est disponible sur le site web suivant : http://www.niimbot.com.

Declaration of conformity

Hereby, Wuhan Jingchen Intelligent Identifification Technology Co., Ltd. declares that this device is in compliance with the essential requirements and other relevant provisions of Radio Equipment Directive (RED) 2014/53/EU. This product can be used across EU member states. This device can be used in European Union.
Hereby, [Wuhan Jingchen Intelligent Identifification Technology Co., Ltd.] declares that the radio equipment type [NIIMBOT B31] is in compliance with Directive 2014/53/EU.
The full text of the EU declaration of conformity is available at the following internet address:http://www.niimbot.com.

Declaración de conformidad

Por la presente, Wuhan Jingchen Intelligent Identification Technology Co., Ltd. declara que este dispositivo cumple los requisitos esenciales y otras disposiciones pertinentes de la Directiva sobre equipos radioeléctricos (RED) 2014/53/UE. Este producto puede utilizarse en todos los estados miembros de la UE. Este dispositivo puede utilizarse en la Unión Europea.
Por la presente, [Wuhan Jingchen Intelligent Identification Technology Co., Ltd.] declara que el equipo de radio tipo [NIIMBOT B31] cumple la Directiva 2014/53/UE. El texto completo de la declaración de conformidad de la UE está disponible en el siguiente sitio web: http://www.niimbot.com.