70mm

110mm

NIIMBOT

Product Manual

Smart Label Printer

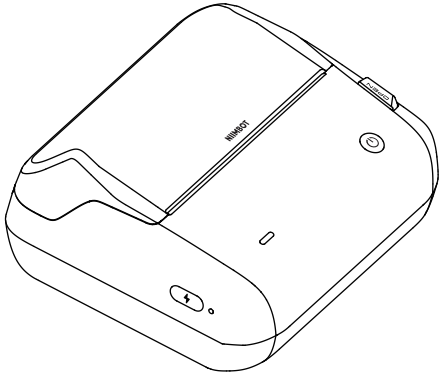

NIIMBOT B4

Notice: If the device cannot be turned on, please charge for one hour.

Wuhan Jingchen Intelligent IdentificationTechnology Co., Ltd.
Support Email : service@niimbot.com
Official Website : www.niimbot.com
Manufacturer's Address : No. 5, Creative Workshop, Creative World,Yezhihu West Road,Hongshan District,Wuhan, China

© 2024 NIIMBOT. All Rights Reserved.
NIIMBOT is a brand under Wuhan Jingchen Intelligent Identification Technology Ltd.

Notice: If the device cannot be turned on, please charge for one hour.

Wuhan Jingchen Intelligent IdentificationTechnology Co., Ltd.
Support Email : service@niimbot.com
Official Website : www.niimbot.com
Manufacturer's Address : No. 5, Creative Workshop, Creative World,Yezhihu West Road,Hongshan District,Wuhan, China

© 2024 NIIMBOT. All Rights Reserved.
NIIMBOT is a brand under Wuhan Jingchen Intelligent Identification Technology Ltd.

NIIMBOT

Product Manual

Smart Label Printer

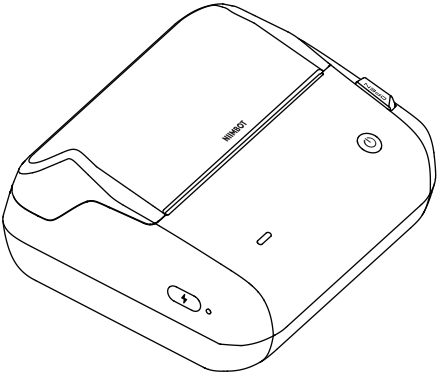

NIIMBOT B4

CONTENTS

01 Package Contents 03

02 Installation 04

03 Download software 07

04 Connecting to Print 08

05 Product Description 09

06 Specifications 11

07 Safety Precautions 12

01

Package Contents

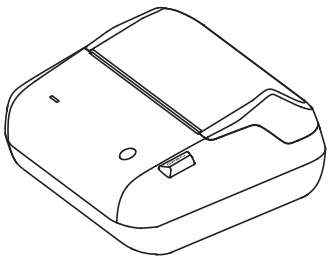

Smart Label Printer *1

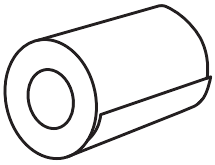

Label Paper Roll *1

USB Type-C Cable *1

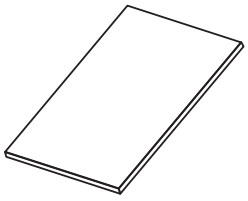

Product Manual *1

02
Installation

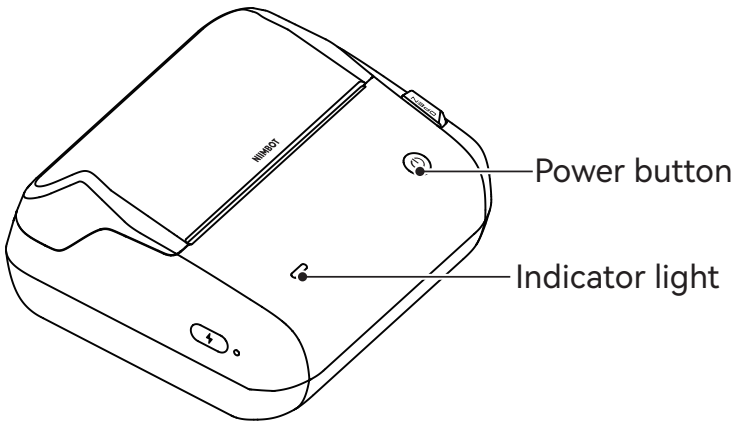

❶ Press and hold the power button for 2-3 seconds to turn on the device.

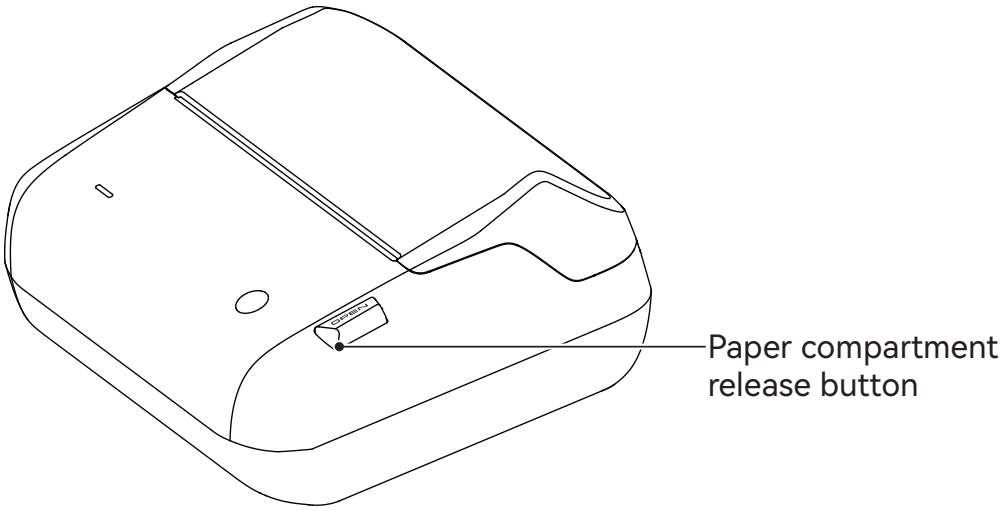

❷ Press the paper compartment release button to open the paper compartment cover.

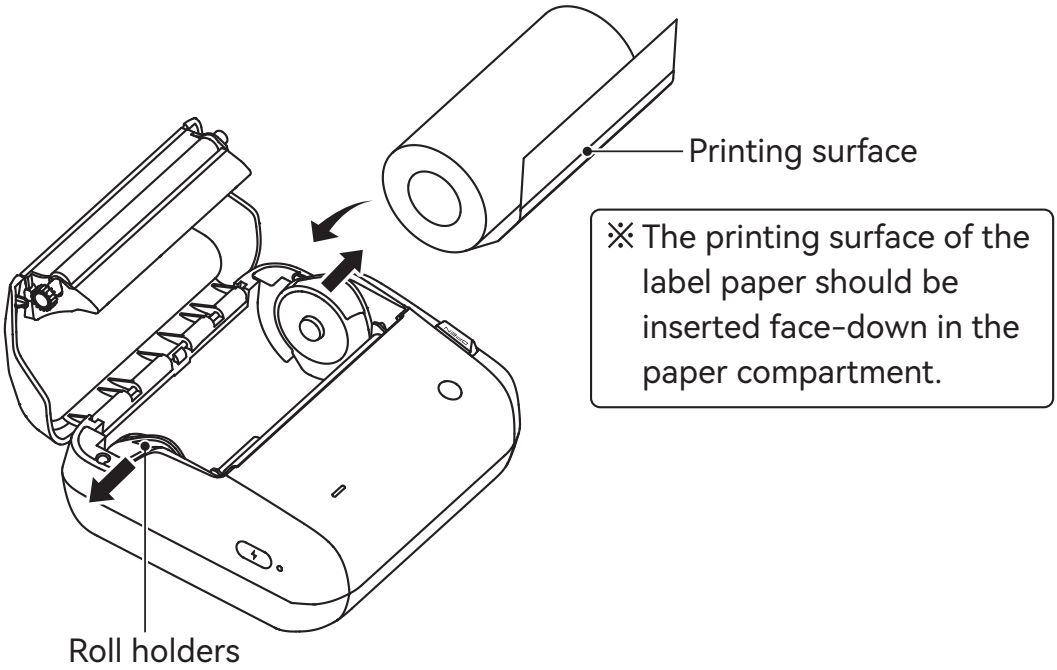

❸ Push the roll holders to either side, then load the paper roll in between the roll holders with the printing surface face down.

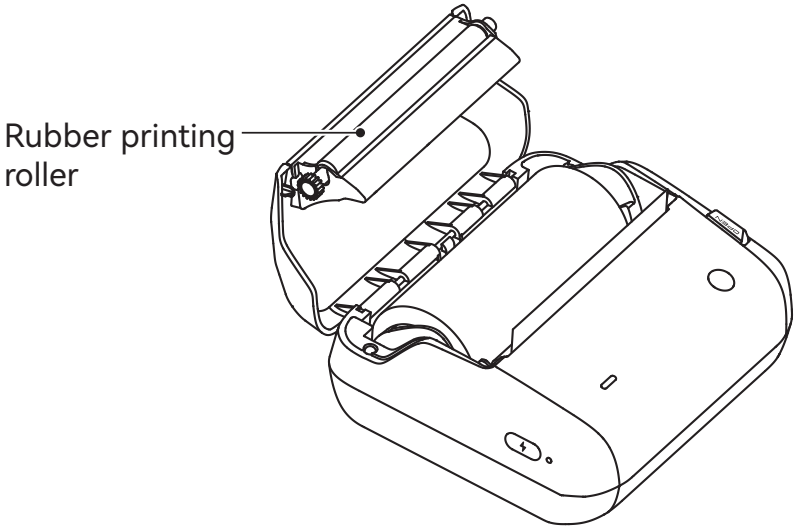

❹ Release your fingers to allow the roll holders to secure the label paper in place.

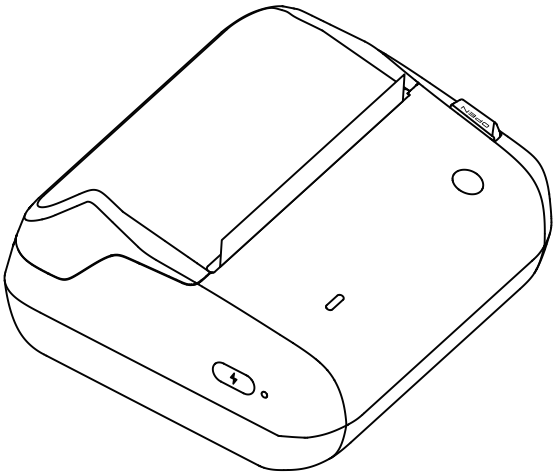

❺ Finally, adjust the position of the label paper so that 2-3cm of the first label sheet is protruding from the paper outlet, then close the paper compartment cover.

03

Download software

01.Download the app

❶ To use this product, please download and install the NIIMBOT app, available from Google Play or the App Store on Apple devices.

NIIMBOT
Design & Print APP
easy to download and use

Download on the App Store

GET IT ON Google Play

※ More instructions can be viewed in the NIIMBOT app

Sign in to NIIMBOT ▸ Me ▸ Help Center ▸ Hardware

02.Download computer version

Visit the software downloads page on NIIMBOT's official website (www.niimbot.com) to download and install the computer version of "NIIMBOT ".

※ Note: To connect a computer to this device, please use the officially provided data cable or a data cable that supports data transmission.

04

Connecting to Print

❶ Once the app has downloaded, make sure your phone's Bluetooth is turned on.

※ Note: Location permissions may need to be enabled on Android phones.

Turn on Bluetooth ✔

❷ Open the app and search for Bluetooth devices to connect to.

※ Note: If it asks for a PIN, enter 0000 or 1234 then press OK.

❸ Once successfully connected, go to the Drawing Board.

Note

The illustrations of products, accessories, software interfaces, etc. in this getting started guide are illustrative in nature and for reference only. Due to product updates and upgrades, the physical product may differ slightly from the illustrations. Please refer to the actual physical product in such case. The product is subject to technical improvements without notice.

05

Product Description

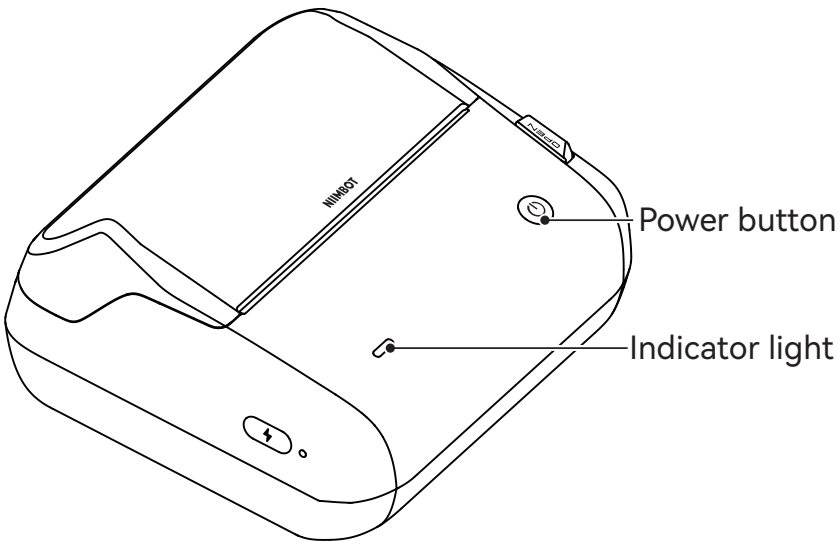

Operation Steps

Function	Process
Turn on	Press and hold the power button for three seconds
Turn off	Press and hold the power button for three seconds while powered on
Feed paper	Press the power button once while powered on
Print testing page	Press the power button twice while powered on
Label/ ticket mode switch	Press the power button three while powered on,the self-test page will be printed after switching

Indicator light

Color	Status	Meaning
Blue	Solid	Powered on but not connected
	Flashing quickly	Upgrading firmware
Green	Solid	Bluetooth connected
	Flashing quickly	Printing
Red	Solid	The paper compartment is not closed;out of paper; or paper output error

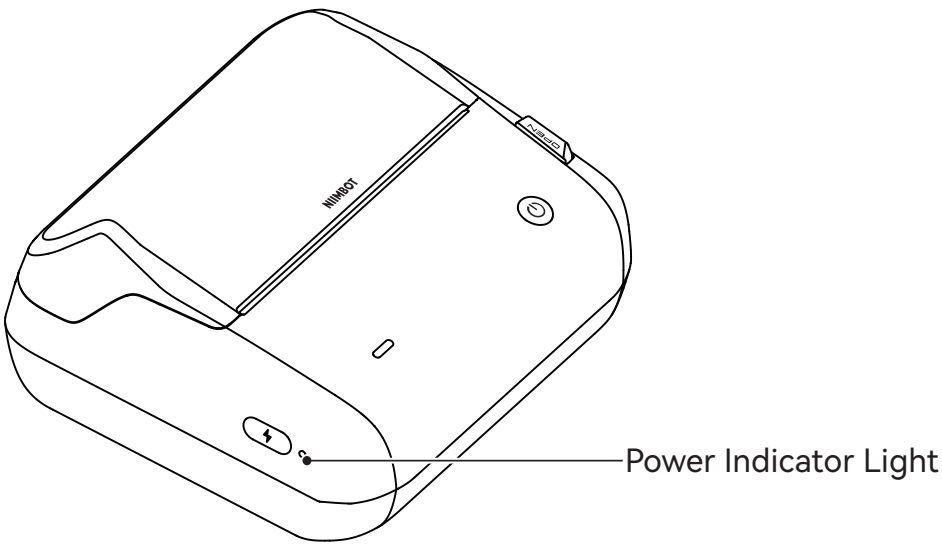

Power Indicator light

Color	Status	Meaning
White	Flashing slowly	Charging
	Solid	Fully charged and connected to power
Red	Solid	Low battery

06

Specifications

Product	Smart Label Printer	Model	NIIMBOT B4
Dimensions	135*157*69mm	Weight	757g
Charging Time	3 - 4 hours	Input	5V DC, 2A
Battery Capacity	2000mAh	Printing Method	Thermal printing
Printing Resolution	203dpi	Printing Width	104mm
Connectivity	Bluetooth, Type-C	Charge	Type-C
Transmit Power	4dBm(Maximum) for EU	Operating Temperature	0℃ - 45℃
RFID	13.56MHz		

07
Safety Precautions

Read all instructions and warnings in this guide carefully before using the product to ensure proper and safe use of the product and to avoid personal injury or damage to property.

***Warning**

Do not disassemble the product yourself. No returns or exchanges will be authorized for disassembled products.	Do not use corrosive chemical products or cleaners to wipe down the product.	Do not use the product in the vicinity of flammable substances such as in gas stations, fuel depots, etc.

1. Keep the product and accessories in a safe place that is inaccessible to children, or only allow use under the supervision of a guardian.
2. Immediately disconnect the product from the power source if the product enters water.
3. Immediately disconnect the product if the device malfunctions.
4. If you use a power adapter to charge (or power) the device, you must purchase an adapter that is safe, compliant, and meets the standards.
5. Do not disassemble the product to replace the battery yourself. Incorrectly replacing the battery can result in an explosion.

6. The battery contains special protective circuitry and devices. Do not disassemble the battery as this may cause short circuits or electrolyte leakage. If electrolytes accidentally enter your eye, rinse immediately with clean water and seek medical advice.
7. Do not expose the appliance or power adapter to high-temperature or high-humidity environments, or put in water, to prevent short circuits that can cause the battery to become hot, smoke, deform, get damaged or even explode.
8. Disconnect the power adapter immediately if you notice either smoke or a smell coming from the product or the power adapter, taking care to avoid burns.

***Important**

Please purchase the version of the product that matches your region or country of use through the NIIMBOT official store or a NIIMBOT authorized sales agent. Purchasing the product through other channels may mean you buy a pirated product or a product not adapted to your region or country of use which may lead to usage issues. In such cases, NIIMBOT may be unable to provide you with further assistance.

NOTE: This equipment has been tested and found to comply with the limits for a Class B digital device, pursuant to part 15 of the FCC Rules. These limits are designed to provide reasonable protection against harmful interference in a residential installation. This equipment generates, uses and can radiate radio frequency energy and, if not installed and used in accordance with the instructions, may cause harmful interference to radio communications. However, there is no guarantee that interference will not occur in a particular installation. If this equipment does cause harmful interference to radio or television reception, which can be determined by turning the equipment off and on, the user is encouraged to try to correct the interference by one or more of the following measures:

- Reorient or relocate the receiving antenna.
- Increase the separation between the equipment and receiver.
-Connect the equipment into an outlet on a circuit different from that to which the receiver is connected.
-Consult the dealer or an experienced radio/TV technician for help.

Changes or modifications not expressly approved by the party responsible for compliance could void the user's authority to operate the equipment.

This device complies with Part 15 of the FCC Rules. Operation is subject to the following two conditions: (1) this device may not cause harmful interference, and (2) this device must accept any interference received, including interference that may cause undesired operation.

This device contains licence-exempt transmitter(s)/receiver(s) that comply with Innovation, Science and Economic Development Canada’s licence-exempt RSS(s). Operation is subject to the following two conditions:
(1) This device may not cause interference.
(2) This device must accept any interference, including interference that may cause undesired operation of the device.

L’émetteur/récepteur exempt de licence contenu dans le présent appareil est conforme aux CNR d’Innovation, Sciences et Développement économique Canada applicables aux appareils radio exempts de licence. L’exploitation est autorisée aux deux conditions suivantes:
(1) L' appareil ne doit pas produire de brouillage;
(2) L' appareil doit accepter tout brouillage radioélectrique subi, même si le brouillage est susceptible d' en compromettre le fonctionnement.