NIIMBOT精臣

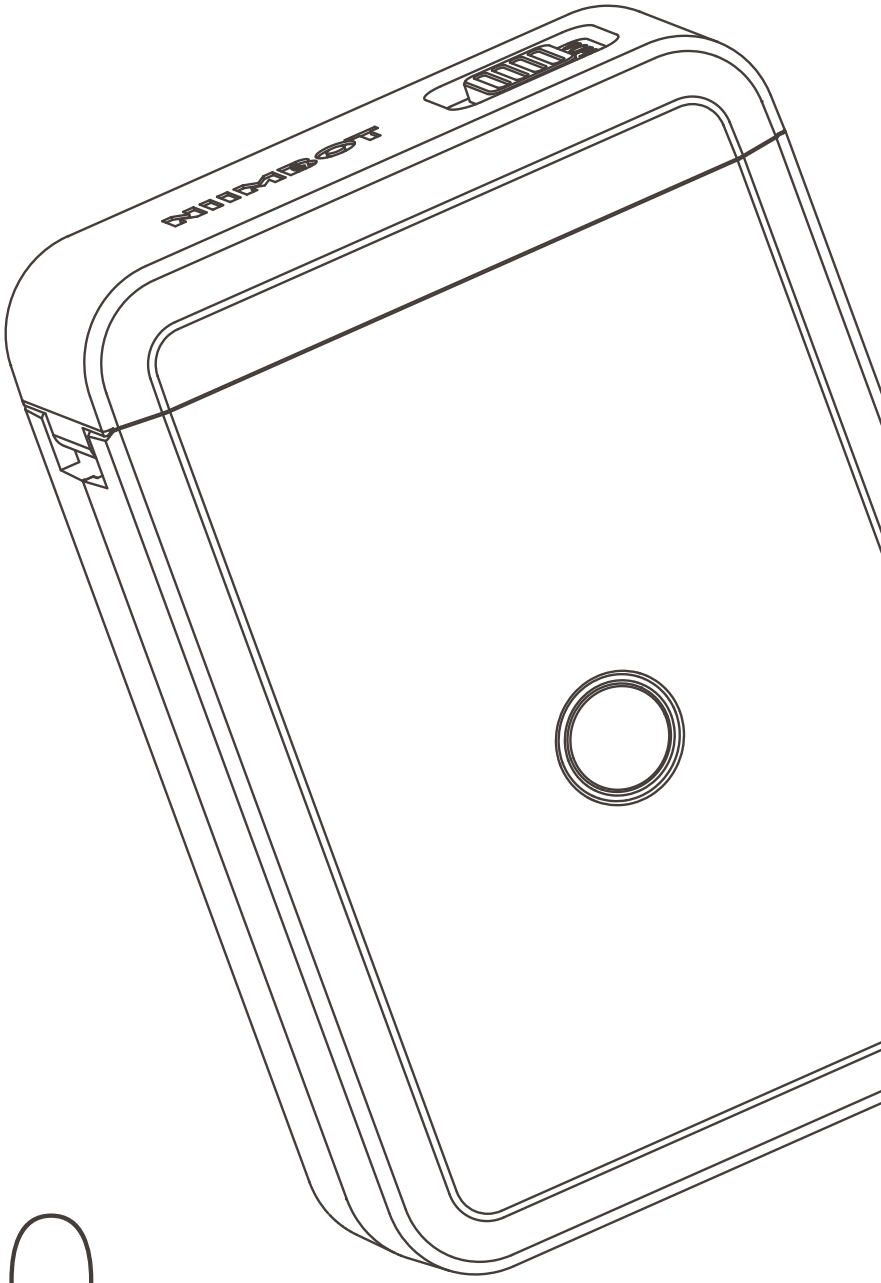

D110

Operating Instructions

A Letter to our Customers

Dear customers

Thank you for choosing NiiMbot. NiiMbot is committed to providing the most intelligent label solution and the best customer service. Please feel free to contact us if you have any questions or suggestions during the use of our products. We pay great importance to user experience, and we are willing to hear our customers' voices to optimize our products and software. The voice of every customer is the inspiration and impetus to the development of NiiMbot.

Now, Welcome to life with intelligent labeling.
If you do not need an account to save your labels and templates for now, please skip the registration and use the label maker. After agreeing to the Terms and Conditions Agreement and the permission of location access and phone storage, no information of unregistered users will be collected.d

Meanwhile, for registered users, please do not worry too much about the data collection:

Terms and Conditions Agreement is the required and legal agreement of the application market. For unregistered users who agree with the agreement will not be collected the information.

The permission to location access is for a faster and more stable Bluetooth connection. Because of different network service providers in different countries, when accessing the location, the app can detect the device nearby more rapidly. This is the best Bluetooth connection solution based on thousands of tests by our software engineers.

The permission to storage access is for registration, saving labels and templates in future.

Registration will not affect the usage of the device. Sign Up an account is for saving labels and templates. If labels or templates are lost or deleted by mistake, you can contact customer service to retrieve them.

Thank you again for choosing and trusting NiiMbot. Choosing NiiMbot means you have chosen intelligent home life and high-quality service. NiiMbot will not let you down!

Sincerely
NiiMbot

CONTENTS

01 Basic Parametrs 02

02 Basic Usage 03

03 Indicator Light Instructions 05

04 Quickstart Guide 06

05 Q&A 12

06 Cleaning Procedure 17

07 After-sales Service 19

08 Notes 22

01

Basic Parametrs

Model	D110
Color	White
Material	ABS+PC
Printing method	Thermal
Resolution	203dpi
Printing speed	15mm/s~20mm/s
Label width range	15mm
Frequency	2402-2480MHz
Power	0dbm
Connection	Bluetooth 5.0
Barcode printing	Supports barcodes and QR codes
Working temperature	-10°C — 50°C
Battery Type	1200mAh Lithium battery
Interface	Type-c
Endurance	Work continuously for 4~5 hours

02

Basic Usage

Slide left to open the lid

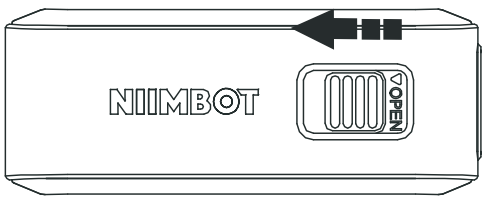

1.Lid opening method

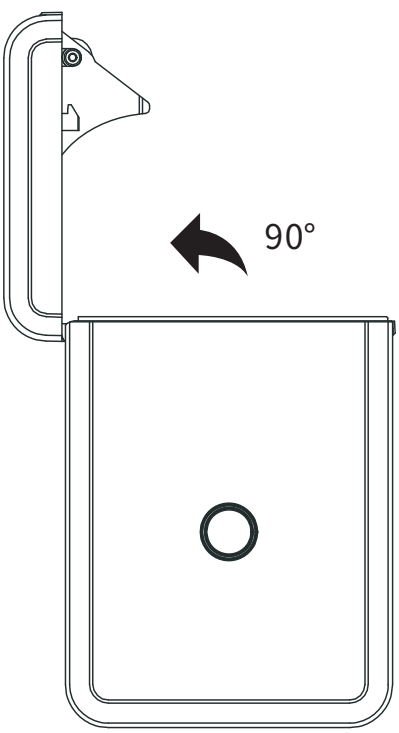

2.Opening angle

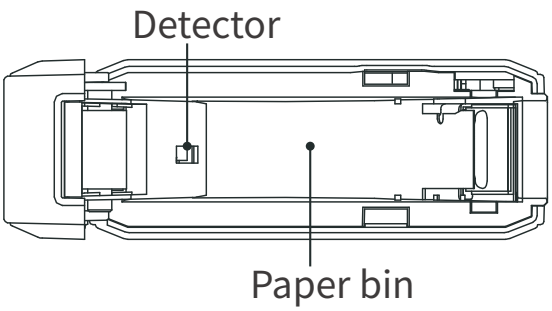

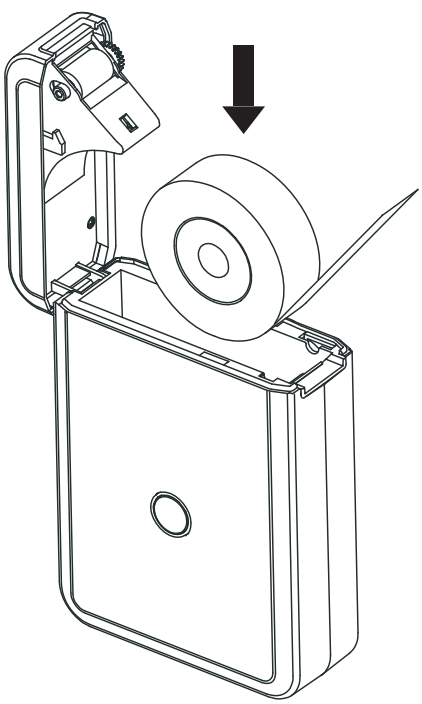

3.Consumable installation

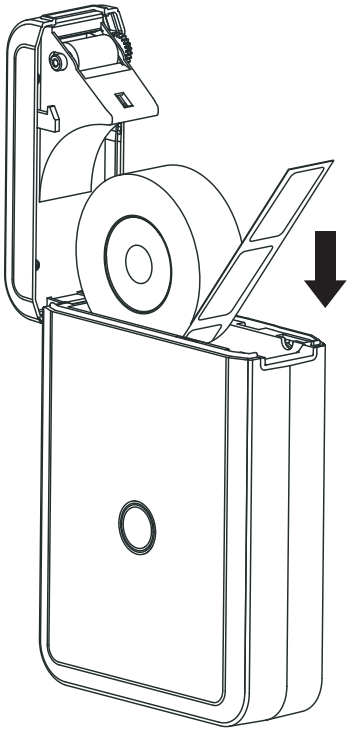

Make the label sticker side down

Make sure 0.1-0.2 inch of label paper left outside.

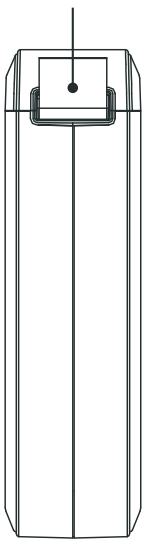

Be sure to slide to t he rightmost

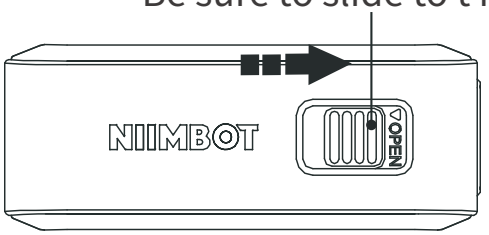

4.Correct closure

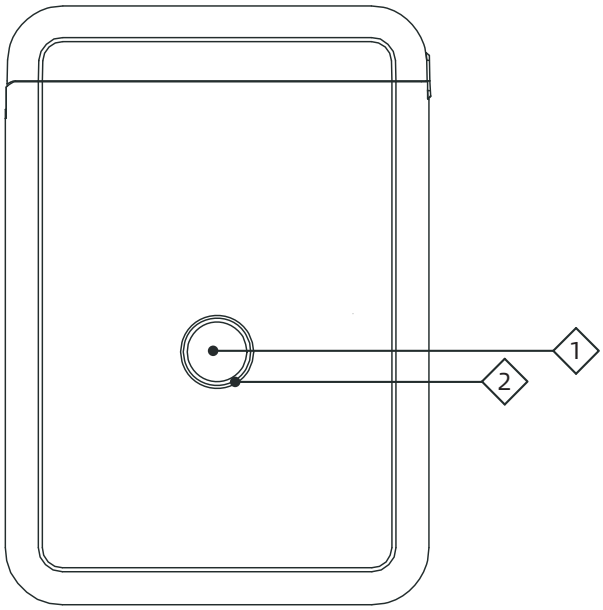

1 Power Button

2 Indicator light

5.Press the power button about 3-5 seconds to start printer

Connect the printer with APP to set consumable specifications.

Edit the print contents and press OK to print.

03

Indicator Light Instructions

Indicator light	Status	Instruction
Blue	Strobe slowly	Bluetooth not connected
Blue	Strobe quickly	During printing and charging
Blue	Normally on	Bluetooth connected and battery fully charged
Red	Strobe slowly	Bluetooth not connected and low battery
Red	Strobe quickly	Printing and charging with low battery
Red	Normally on	Bluetooth connected and low battery

04

Quickstart Guide

❶ App Download

1. Search NIIMBOT in Google App Store or App Store to download.
2. NIIMBOT APP is compatible with Android, Microsoft and iOS systems.

❷ About new device:

There is usually some power left for customers to boot up the new Niimbot label maker. If there is not, please charge the device for 20 minutes before turning on it.

❸ Bluetooth connection

1. Turn on the Bluetooth and label maker, and then open NIIMBOT app.

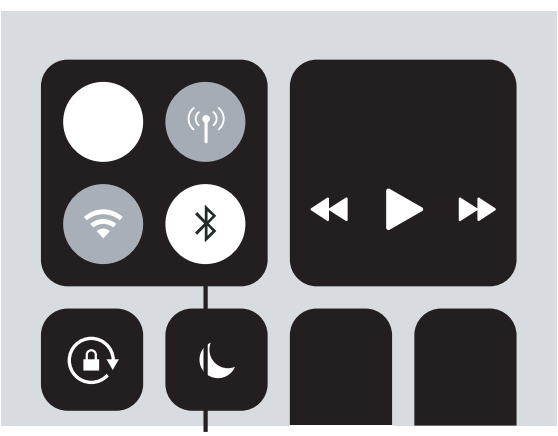

Turn Bluetooth

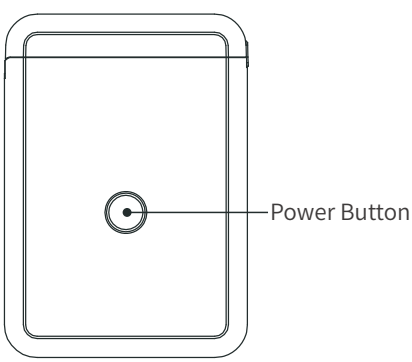

Press the power button about 3-5 seconds to start printer.

2. Click on the “unconnected” button in the top right corner of the app, then choose the correct device (e.g. D110 series) and click on “search”. Your device will be found.

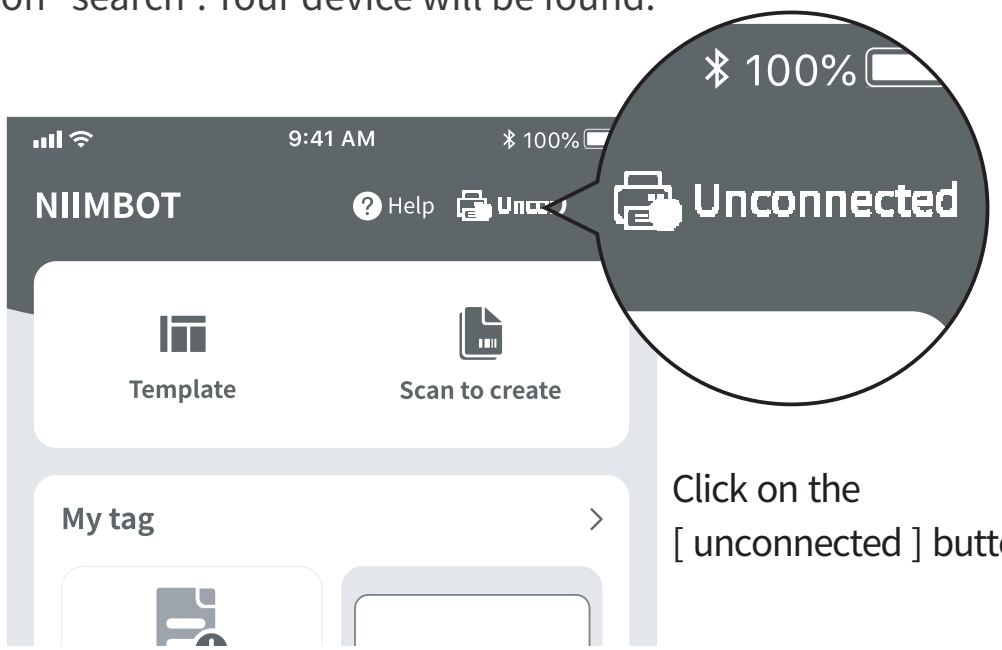

Click on the
[unconnected] button

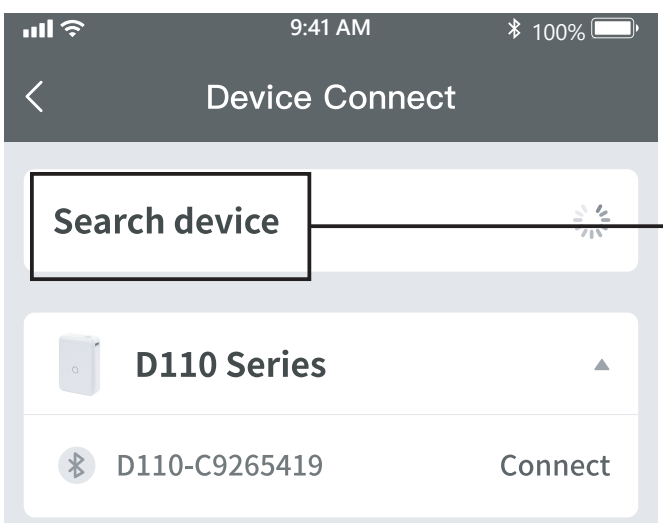

Search device

3. Click on “pair”or “connect”, you will successfully connect to the Bluetooth.

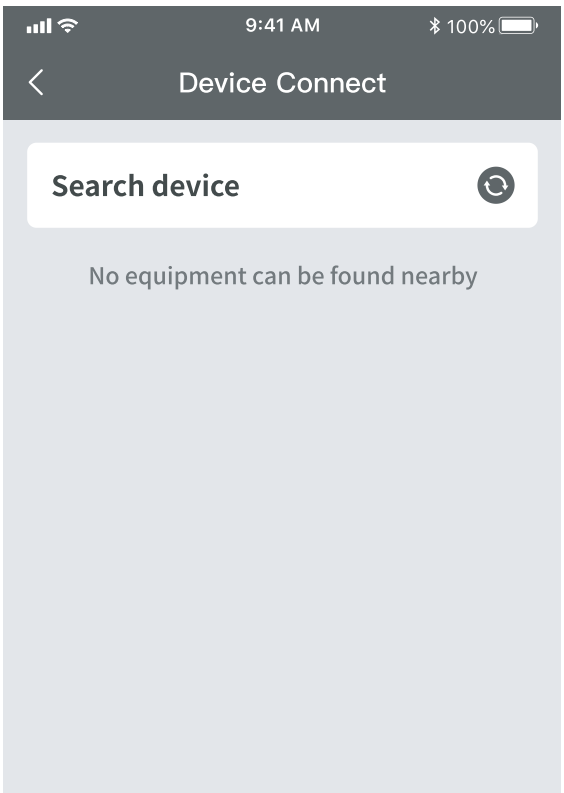

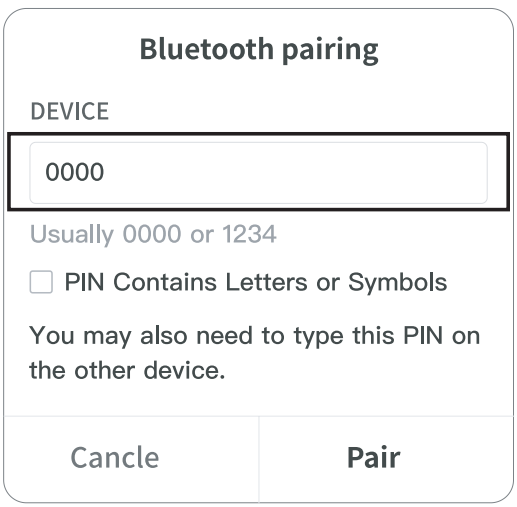

Note: If a PIN code is needed, please enter 1234 or 0000.

❹ Label loading

1. Slide the button on the cover of the device to open the cover.

2. Place the label sticker facing down and load it in the paper bin. Make sure 0.1-0.2 inch of label paper left outside.

2. Close the cover and make sure some label paper is left outside.

Note: 1. If the label is laid reversely, blank pages will continue to be printed.

2.No label paper left outside will cause the abnormal paper feeding. The device will not response or response without paper feeding.

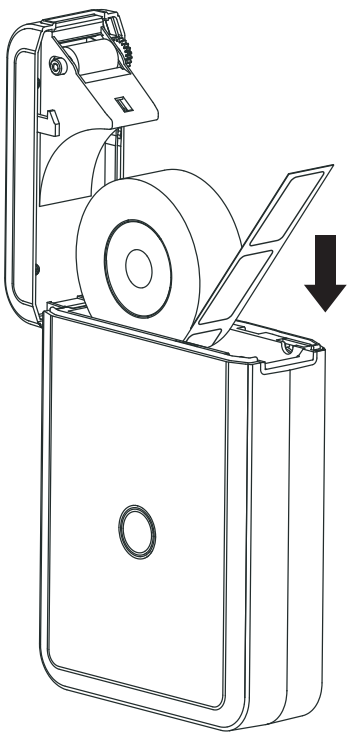

Make the label sticker side down

Make sure 0.1-0.2 inch of label paper left outside.

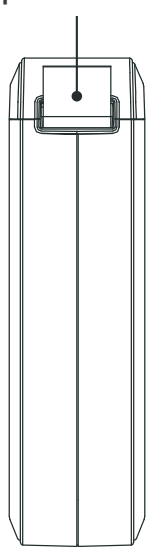

❺ Printing Steps

1. After Bluetooth connection and correct paper loading, the app automatically identifies the label template and displays it. Click on the recognized template and go into the editing page.

2. Click on【Text】at the lower part of the page, the text box pops up. Double click the text box and edit labels in the entry bar. Click【Confirm】next to the entry bar to finish the editing. Double click the text box again for modification, and edit what you need in the entry bar and confirm.

3. After confirming the content, you can adjust the position of the text box and font size.

4.Click the【Print】option at the lower right corner in the blue area. Set number of copies and density before printing.

❻ Note:

1. D110 label maker applies direct thermal printing technology and uses chemically-treated paper that darkens when heated by a thermal print head. At present, the only black printout is supported.
2.There is a number of materials in the app, including but not limited to symbols, figures, simple images, QR codes, bar codes, intelligent Identification function and so on, which can help to create personalized labels.
3.Editing functions are powerful, including but not limited to copy, paste, bold, italic, rotate, align, undo, recover, delete functions, and so on. You can also adjust kerning and line spacing.

05
Q&A

1. **Question:** Is there one roll of label paper offered for free? What style is it?
   Answer: NiiMbot D110 is sold with a roll of white label paper inside the machine. The label is 12 *40 mm.

2. **Question:** Why can not the label maker be fully charged when being plugged into the laptop, causing automatic shutdown after unplugging?
   Answer: The output voltage of the laptop USB interface is insufficient and unstable, which is unable to provide a stable charging environment. Please use a wall socket for charging.

3. **Question:** Do I need to register to use the machine?
   Answer: Registration is not necessary. Registered account can enjoy the function of saving and retrieving label templates.

4. **Question:** What should I do if pin code 0000 or 1234 does not work?
   Answer: It is possible that the device is not recognized by the app temporarily. Please enter number 0 for 16 times to refresh. Then please try to enter 0000 or 1234 again.

5 **Question:** Will the machine be automatic shut down?
Answer: After being disconnected the Bluetooth or the app is not used for 15 minutes, the machine will automatically shut down, saving power and protecting the battery.

6 **Question:** Why does the machine work normally but keep printing blank paper?
Answer: It may be because the label paper is laid reversely, please keep the label sticker side down.

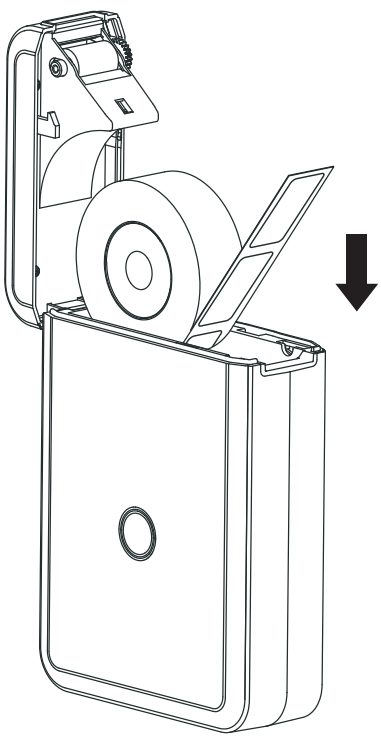

Make the label sticker side down

❼ **Question:** Why does the machine keep feeding paper?

Answer:

(1) It may be because there is label or residues sticking on the detectors on the cover or in the paper bin.

(2) It may be because there is label or residues sticking on the print head. The label paper failed to be detected.

(3) D110 label maker is only suitable for NiiMbot label range. Other Brand label paper will not work and cause unsatisfied printing results.

(4) The detectors are malfunctioning, please contact the seller.

❽ **Question:** Why does the printout look gray or in a light color?

Answer:

(1) The label used is not NiiMbot label range.

(2) The actual number of label printed exceeds the number which is preset.

(3) The chip is malfunctioning.

❾ **Question:** Why does the error of “use the new version paper” pop up?

Answer:

(1) D110 label maker is only suitable for NiiMbot label range. Other Brand label paper will not work and lead to the damage to the machine.

(2) There are residues sticking on the detectors, resulting in failed label detection. Please remove the residues.
(3) It may be because of temporary failure of chip detection. Please contact customer service and provide the label code. Our Tech Support will fix the problem for you in 10 minutes.

⑩ **Question:** Why is the Bluetooth suddenly disconnected and fail to be connected for many times?
Answer: It may be because the Bluetooth system crashes. Please reboot the phone and the Bluetooth.

⑪ **Question:** Why cannot the machine be searched by the app?
Answer:
(1) If the machine is being charged, please unplug it and try to search it again.
(2) Bluetooth responses slowly. Please re-open the app and reboot the machine and try to connect again.
(3) Please update or re-install the app and try. Or please contact the customer service.

⑫ **Question:** Does the label maker support batch printing? How many numbers of labels can be printed in one batch at most?

Answer: D110 supports batch printing. The APP currently supports up to 999 labels in one batch. But considering the actual number of label paper in different sizes, around 300 label stickers can be printed in one batch at most.

⓭ **Question:** In what situation does the error “cover is open” pop out?

Answer: There are possibilities as follows:

(1) The cover is not closed properly. Please repeat opening and closing the cover for several times.

(2) Label paper is laid reversely. Please load it correctly.

(3) There are residues left in the paper bin or on the print head. Please remove the residues or clean the print head properly.

(4) Turbulence in transit may result in loose wiring inside the machine. Please contact customer service.

⓮ **Question:** Why does blank paper come out after printing and the machine keeps making a cracking sound.

Answer:

(1) No label left outside when loading the label paper will lead to failed paper feeding. Please make sure 0.1-0.2 inch of label paper left outside.

(2) The paper has been used up, please replace.

⓯ **Question:** What is the reason for the sudden stopping of printing.
Answer: In order to ensure the safety of the label maker, multiple protection modes have been programmed. In the event of “lack of paper” , “cover open” , “data error” , “ overheat temperature” , “low on battery” and other issues, the machine will stop printing. Please analyse the problem according to the actual situation.

⓰ **Question:** How can I center the label content when editing?
Answer: On the right side of the [Style] section, there are options of aligning center, left, or right-click to adjust the text position in the text box. In the [Align] section, the position of the text box on the label paper can be adjusted. At the same time, the text box can be moved with fingers.

⓱ **Question:** How can I solve the offset problem in printing?
Answer:
(1) D110 label maker is only suitable for the NiiMbot label range. Other Brand label paper will not work and cause unsatisfied printing results.
(2) The machine can not detect the label paper and the detector is malfunctioning.
(3) Paper Jam. Please check if there is any residue or glue sticking in the paper bin or at the print head; if the edge of the label paper is rolled up.

06

Cleaning Procedure

1. Turn off the label maker;
2. Wait the print head to cool off completely after printing. Open the cover to find print head;
3. Clean the dust or residues with alcohol cotton ball (drained);
4. Wait 5-10 minutes to make sure the alcohol has been volatilized before closing the cover.

07

After-sales Service

❶ Customers enjoy free return and exchange service within 30 days from the date of receipt of the product.

❷ Customers enjoy one replacement service within one year from the date of receipt of the product.

❸ Customers enjoy an additional two-year warranty service from the date of receipt of the product. Please contact Customer Service who will provide the perfect after-sales service.

❹ Customers who order online please contact the seller through the order details to enjoy high-quality after-sales service. Customers who order offline please contact the sellers or dealers.

08
Notes

1. Safely keep this product and accessories out of the reach of children to prevent danger.

2. Do not open the paper bin when the machine is printing.

3. Make sure that the paper bin is clean before using. If there is any residue inside, it may cause damage to the print head while printing.

4. Wipe the print head and paper bin gently with a clean, soft cloth. Solutes, corrosive chemicals , or detergents such as benzene or thinners are prohibited.

5. Power off the printer immediately when it is malfunctioning.

6. Please do not disassemble the printer without NIIMBOT authorization. Otherwise, the printer can not be returned or replaced.

7. In the event of the damaged power cable, please do not use it as this may result in electric shock, fire or damage to the power adapter.

8. After printing, the print head may be still hot. Do not touch it to avoid bums.

9. Use NiiMbot label range, otherwise, poor print quality or damage to the printer may happen.

10. If documents which will be preserved for long-term need to be printed, please choose long-lasting thermal label paper.

11. Charge the battery in a cool and airy room. Do not expose the printer and power adapter to high-temperature and high-humidity environments, or do not expose them to water to avoid short circuits which can cause the battery to heat, smoke, deform, damage, or even explode. If the power adapter comes into contact with water or other liquid, cut off the power immediately. When you notice smoke or an odor from your printer or power adapter, unplug the power adapter immediately and take care to avoid burns.

⓬ When unplugging the printer, grab the power adapter. Pulling the power cable directly will damage the cable.

⓭ Do not use the printer where there are Inflammable substances like gas stations and fuel warehouses.

⓮ If there is any problem about usage, please contact the dealers or NiiMbot after-sales service. NIIMBOT will provide the best after-sales service for global customers!

Declaration of conformity

Hereby, Wuhan Jingchen Intelligent Identification Technology Co., Ltd. declares that this device is in compliance with the essential requirements and other relevant provisions of Radio Equipment Directive (RED) 2014/53/EU. This product can be used across EU member states. This device can be used in European Union.

Hereby, [Wuhan Jingchen Intelligent Identification Technology Co., Ltd.] declares that the radio equipment type [D110] is in compliance with Directive 2014/53/EU.

The full text of the EU declaration of conformity is available at the following internet address:http://www.niimbot.com.

RF ID Frequency:13.56MHz

RF ID Max Transmit power:18.52dBuA/m@10m

This device complies with Part 15 of the FCC Rules. Operation is subject to the following two conditions:
(1)This device may not cause harmful interference.
(2)This device must accept any interference received, including interference that may cause undesired operation.
2. Changes or modifications not expressly approved by the party responsible for compliance could void the user?ÿs authority to operate the equipment.
Note:This equipment has been tested and found to comply with the limits for a class B digital device,pursuant to Part 15 of the FCC Rules. These limits are designed to provide reasonable protection against harmful interference in a residential installation.

This equipment generates uses and can radiate radio frequence energy and, if not installed and used in accordance with the instructions,may cause harmful interference to radio communications.However,there is no guarantee that interference will not occur in a particular installation.if this equipmemt does cause harmful interference to radio or television reception,which can be determined by turning the equipment off and on,the user is encouraged to try to correct the interference by one or more of the following measures:

- Reorient or relocate the receiving antenna.
- Increase the separation between the equipment and receiver.
- Connect the equipment into an autlet on a circuit different from that to which the receiver is connected.
- Consult the dealer or an experienced radio/TV technician for help.

The device has been evaluated to meet general RF exposure requirement.

The devicecan be used in portable exposure condition without restriction.

Wuhan Jingchen Intelligent Identification Technology Co.,Ltd.

Address: Creative Workshop, No. 5 Creative World,
Yezhihu West Road, Hongshan District, Wuhan

Technical Support Email: service@niimbot.com

Official website: www.niimbot.net

Twitter:Niimbot

Instagram:niimbot