motorola

Wireless Charging Case User Guide

(EDGE-WC-BK)

en (*pp.01-03*) es (*pp.04-05*) fr (*pp.06-07*)

pt (*pp.08-09*) de (*pp.10-11*) it (*pp.12-13*)

English

Features:

1. Built in 10W Qi compatible receiver, 5V/1A, 9V/1.1A.
2. Wired USB-C input accepts 5V/3A, 9V/2A, QC3.0 & USB-PD 18W TurboPower pass through wired charging.

Installation:

1. Attach your Motorola Edge USB-C charge port to the USB-C connector in the wireless charging case.
2. Align the bottom of the phone with the bottom of the case and push in.
3. Push the rest of the phone into the case.

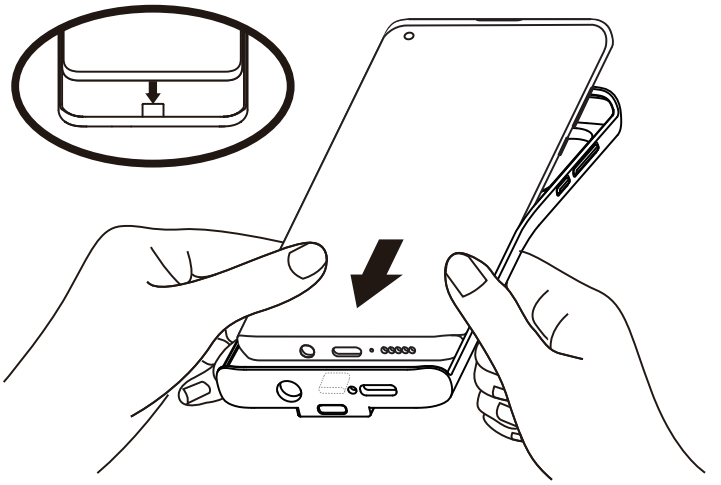

For wireless charging:

Using a Qi wireless charging pad

1. Align the Motorola M-logo with the center of a wireless charging pad.
2. Place the back of the case onto a Qi wireless charging pad.
3. Ensure the wireless charging pad is charging.
4. Your device will begin to charge.
   Note: Wireless charging pad and USB-C cable are sold separately.

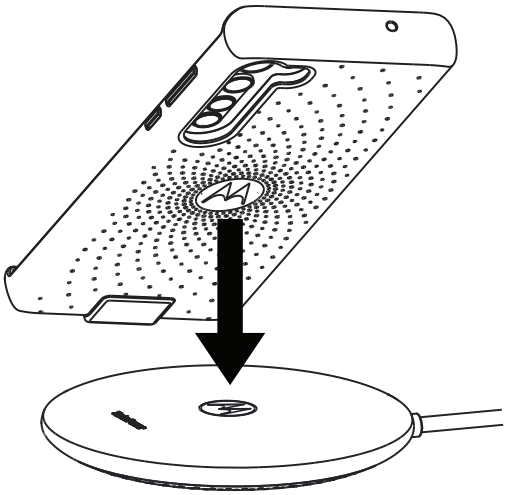

For direct charging:

Connect your charger and USB-C cable to the USB-C port at the bottom of the phone case.
Note: Wall charger and USB-C cable are sold separately.

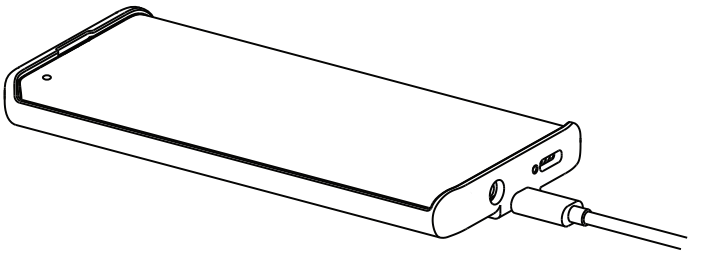

Uninstallation:

1. Keep the bottom of the phone and case connected, slightly release the top of the Motorola edge phone for just enough to get out of the frame of the case top.
2. Keep the alignment of the bottom of the phone with the bottom of the case and pull the phone up from the case to disengage the USB-C charge port from the USB-C connector of case.

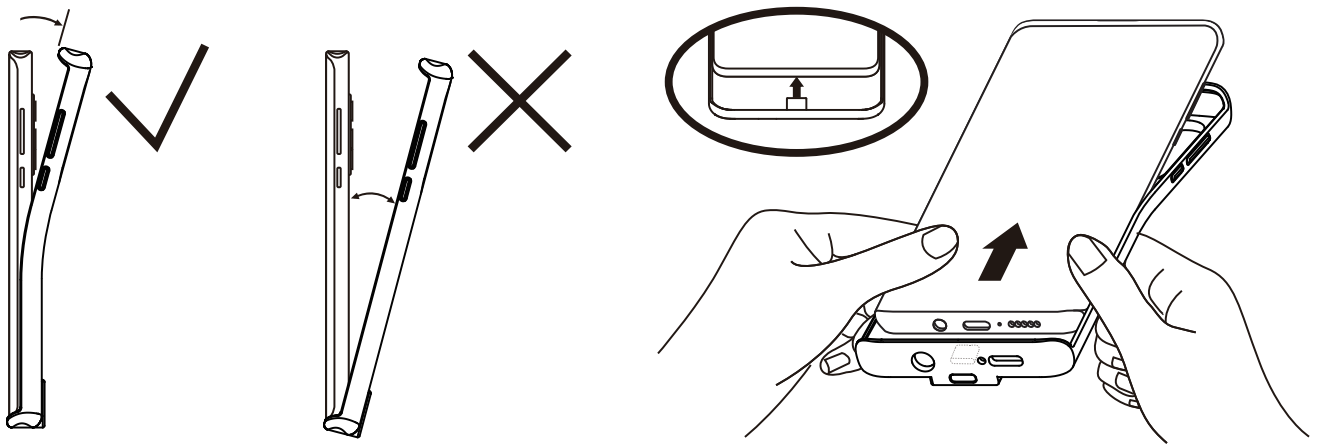

FCC Notice to User

This equipment has been tested and found to comply with the limits for a Class B digital device, pursuant to part 15 of the FCC Rules. See 47 CFR Sec. 15.105(b). These limits are designed to provide reasonable protection against harmful interference in a residential installation. This equipment generates, uses and can radiate radio frequency energy and, if not installed and used in accordance with the instructions, may cause harmful interference to radio communications. However, there is no guarantee that interference will not occur in a particular installation. If this equipment does cause harmful interference to radio or television reception, which can be determined by turning the equipment off and on, the user is encouraged to try to correct the interference by one or more of the following measures:

- Reorient or relocate the receiving antenna.
- Increase the separation between the equipment and the receiver.
- Connect the equipment to an outlet on a circuit different from that to which the receiver is connected.
- Consult the dealer or an experienced radio/TV technician for help.

This device complies with Part 15 of the FCC rules. Operation is subject

to the following two conditions: (1) this device may not cause harmful interference, and (2) this device must accept any interference received, including interference that may cause undesired operation.

Industry Canada Notice to User, RSS-Gen Statement

This device contains licence-exempt transmitter(s)/receiver(s) that comply with Innovation, Science and Economic Development Canada's licenceexempt RSS(s). Operation is subject to the following two conditions: (1) This device may not cause interference. (2) This device must accept any interference, including interference that may cause undesired operation of the device. This device complies with ICES-003 requirements for Class B ITE (Information Technology Equipment). CAN ICES-3 (B)/NMB-3(B)

Recycling of Waste Electrical and Electronic Equipment (WEEE)

This symbol on the product or on its packaging indicates that this product must not be disposed of with your other household household waste. Customers or end-users should contact their local equipment supplier or service center for information on the waste collection system in their country.

For warranty and more information:

motorolachargers.com/phonecases/

Español

Caracteristicas:

1. Receptor compatible con Qi de 10W integrado, 5V/1A, 9V/1,1A.
2. La entrada con cable USB-C acepta el paso de 5V/3A, 9V/2A, QC3.0 y USB-PD 18W TurboPower a través de la carga con cable.

Instalación:

1. Conecte su puerto de carga Motorola Edge USB-C al conector USB-C en la funda de carga inalámbrica.
2. Alinee la parte inferior del teléfono con la parte inferior de la funda y presione.
3. Empuje el resto del teléfono en la funda.

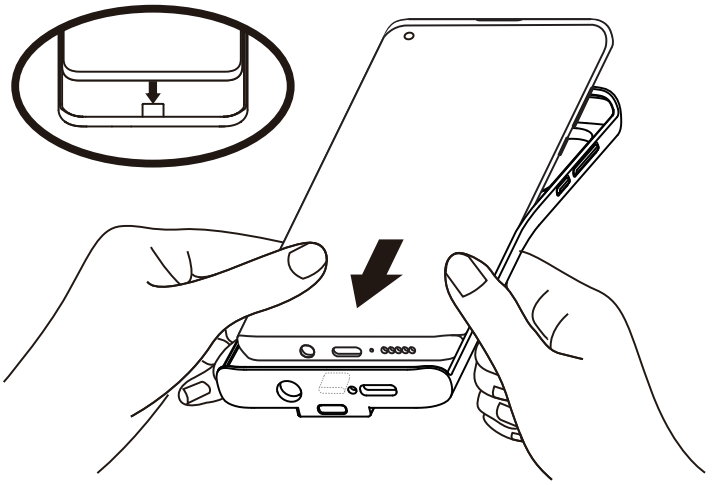

Para carga inalámbrica:

Usando una base de carga inalámbrica Qi

1. Alinee el logotipo M de Motorola con el centro de la base de carga inalámbrica.
2. Coloque la parte posterior del estuche en una base de carga inalámbrica Qi.
3. Asegúrese de que la base de carga inalámbrica se esté cargando.
4. Su dispositivo comenzará a cargarse.
   Nota: la base de carga inalámbrica y el cable USB-C se venden por separado.

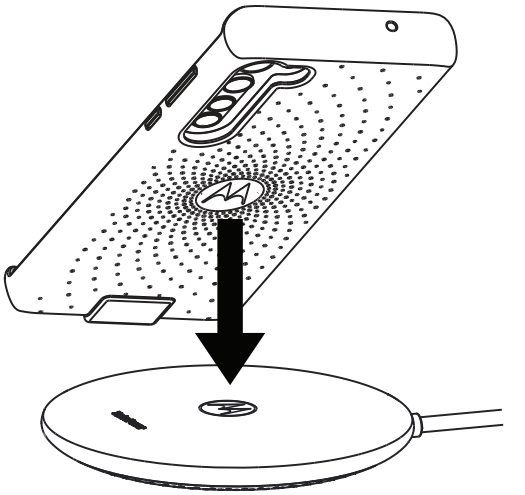

Para carga directa:

Conecte su cargador y el cable USB-C al puerto USB-C en la parte inferior de la funda del teléfono.

Nota: el cargador de pared y el cable USB-C se venden por separado.

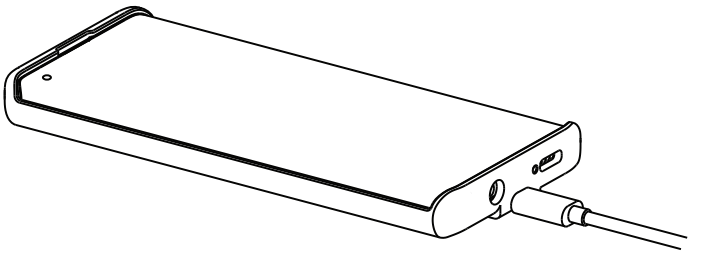

Desinstalación:

1. Mantenga la parte inferior del teléfono y la funda conectadas, suelte ligeramente la parte superior del teléfono Motorola edge lo suficiente para salir del marco de la parte superior de la funda.
2. Mantenga la alineación de la parte inferior del teléfono con la parte inferior de la funda y extraiga el teléfono de la funda para desconectar el puerto de carga USB-C del conector USB-C de la funda.

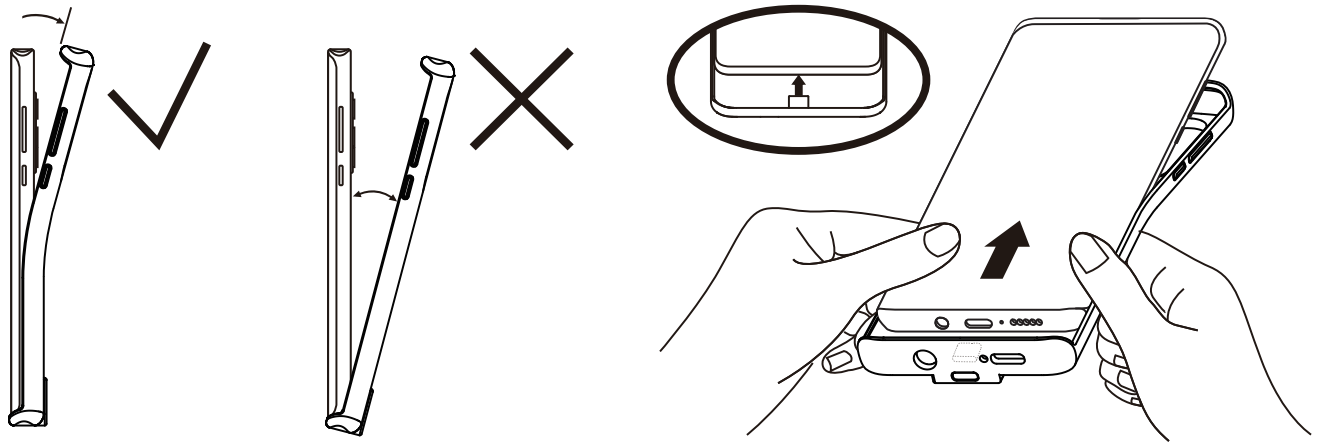

Reciclaje de residuos de aparatos eléctricos y electrónicos (RAEE)

Este símbolo en el producto o en su empaque indica que este producto no debe desecharse junto con la basura doméstica. Los clientes o los usuarios finales deben comunicarse con su proveedor de equipo local o con su centro de servicio para obtener información sobre el sistema de recolección de residuos en su país.

Para garantía y más información:
motorolachargers.com/phonecases/

Français

Fonctionnalités:

1. Récepteur compatible Qi 10W intégré, 5V/1A, 9V/1,1A.
2. L'entrée USB-C filaire accepte le passage 5V/3A, 9V/2A, QC3.0 et USB-PD 18W TurboPower via une charge filaire.

Installation:

1. Branchez le port de charge USB-C de votre Motorola Edge sur le connecteur USB-C de la dcoque de chargement sans fil.
2. Alignez le bas du téléphone avec le bas de la coque et poussez-le.
3. Poussez le reste du téléphone dans la coque.

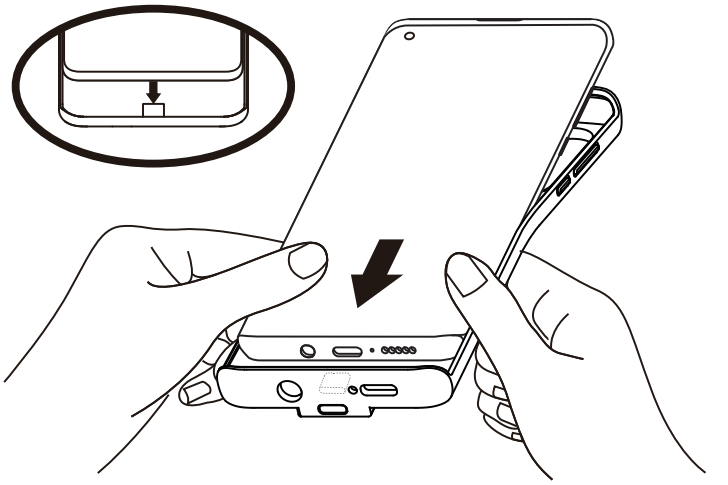

Pour le chargement sans fil:

Utilisation d'une coque de chargement sans fil Qi

1. Alignez le logo M de Motorola avec le centre d'un base de charge sans fil.
2. Placez l'arrière de la coque sur un base de charge sans fil Qi.
3. Assurez-vous que la base de charge sans fil est en cours de chargement.
4. Votre appareil commencera à se charger. Remarque: la base de charge sans fil et le câble USB-C sont vendus séparément.

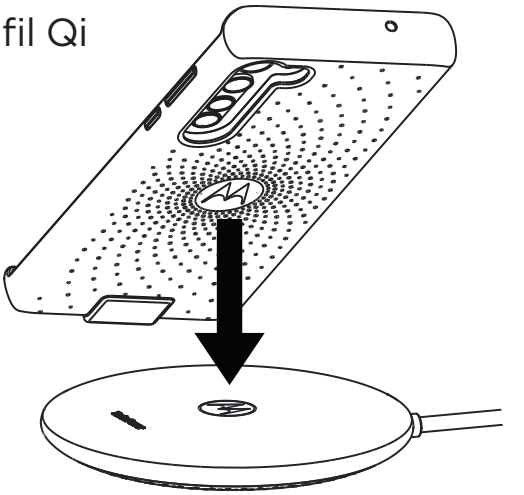

Pour le chargement direct:

Connectez votre chargeur et votre câble USB-C au port USB-C en bas de la coque du téléphone. Remarque: le chargeur mural et le câble USB-C sont vendus séparément.

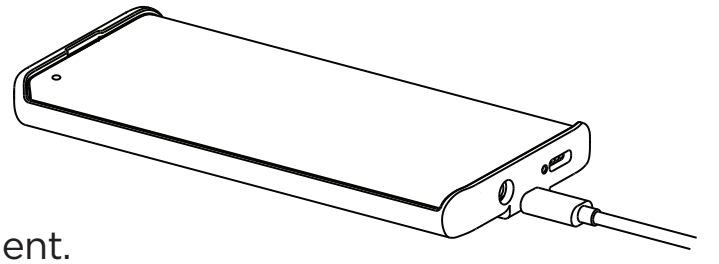

Désinstallation:

1. Gardez le bas du téléphone et la coque connectés, relâchez légèrement le supérieur du téléphone Motorola Edge juste assez pour sortir du cadre supérieur de la conque.
2. Gardez l'alignement du bas du téléphone avec le bas de la conque et tirez le téléphone vers le supérieur de la conque pour désengager le port de charge USB-C du connecteur USB-C de la conque.

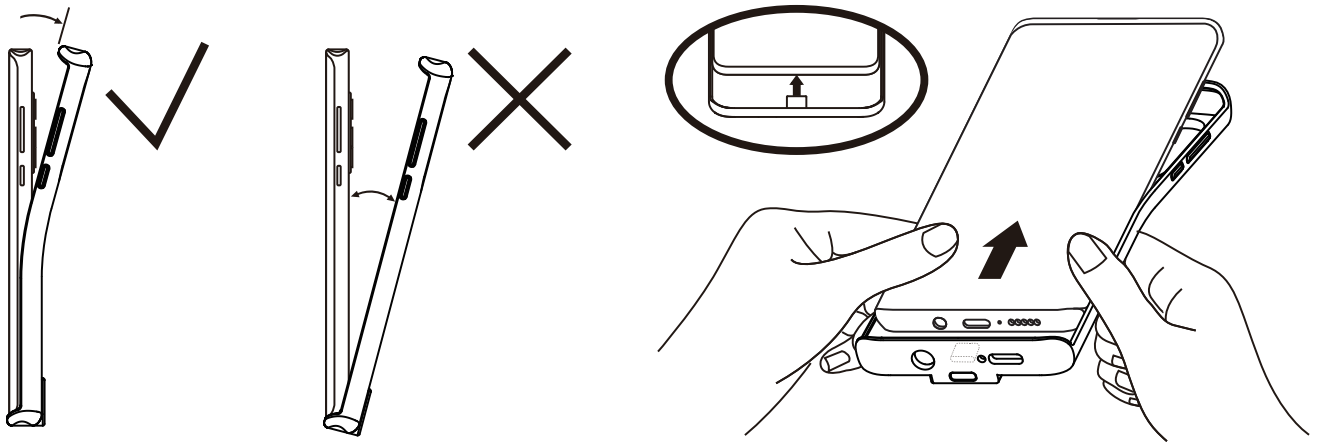

Avis d'Industrie Canada aux utilisateurs

Cet appareil est conforme aux normes CNR d'Industrie Canada pour les appareils radio exempt de license. Son utilisation est assujettie aux deux conditions suivantes: (1) l'appareil ne doit pas causer d'interférences et (2) cet appareil doit accepter toute interférence, y compris les interférences pouvant entraîner un fonctionnement non souhaité de l'appareil. Cet appareil est conforme à la norme NMB-003 pour les équipments Informatiques (EI) de class B. CAN ICES-3 (B)/NMB-3(B)

Recyclage des déchets d'équipements électriques et électroniques (DEEE)

Ce symbole sur le produit ou sur son emballage indique que ce produit ne doit pas être jeté avec vos autres déchets ménagers. Les clients ou les utilisateurs finaux doivent contacter leur fournisseur local d'équipement ou leur centre de service local pour obtenir des informations sur le système de collecte des déchets.

Pour la garantie et plus d'informations:

motorolachargers.com/phonecases/

Português

Características:

1. Construído com receptor 10W Qi, compatível com 5V/1A, 9V/1,1A.
2. A entrada USB-C aceita carregamento com fio de 5V/3A, 9V/2A, QC3.0 e USB-PD 18W TurboPower.

Instalação:

1. Conecte a porta USB-C do Motorola Edge ao conector USB-C da capa de carregamento sem fio.
2. Alinhe a parte inferior do telefone com a parte inferior da capa e empurre.
3. Empurre o resto do telefone para dentro da capa.

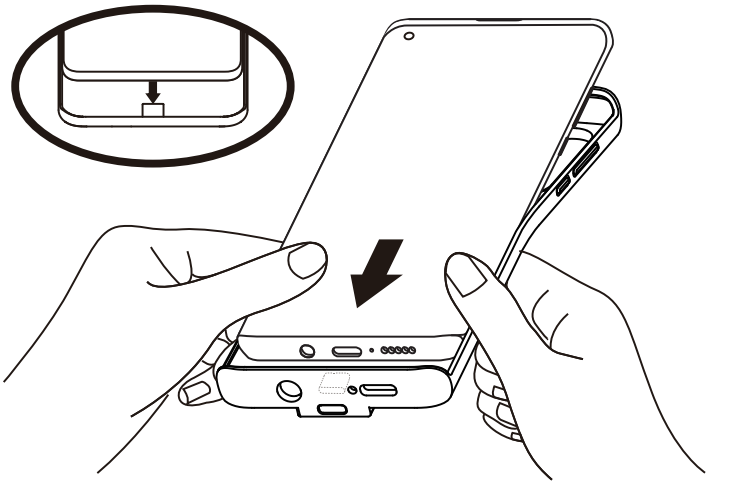

Para carregamento sem fio:

Usando uma base carregadora sem fio Qi

1. Alinhe o logotipo M da Motorola com o centro de uma base carregadora sem fio.
2. Coloque a parte traseira da capa em contato com a base carregadora sem fio Qi.
3. Certifique-se de que a base de carregadora sem fio esteja carregando.
4. Seu dispositivo começará a carregar. Nota: O cabo e a base de carregadora sem fio são vendidos separadamente.

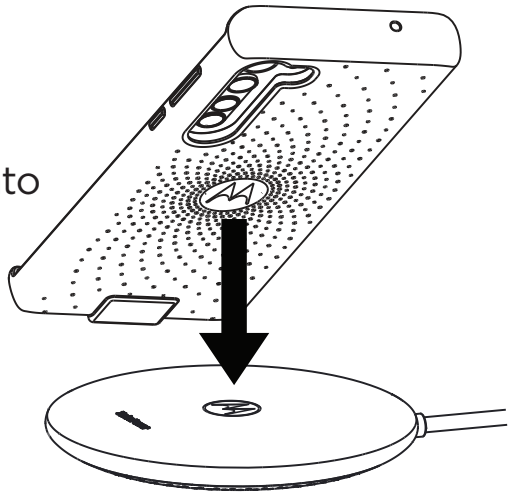

Para carregamento direto:

Conecte um carregador com cabo USB-C à porta USB-C na parte inferior da capa do telefone. Nota: O carregador de parede e o cabo USB-C são vendidos separadamente.

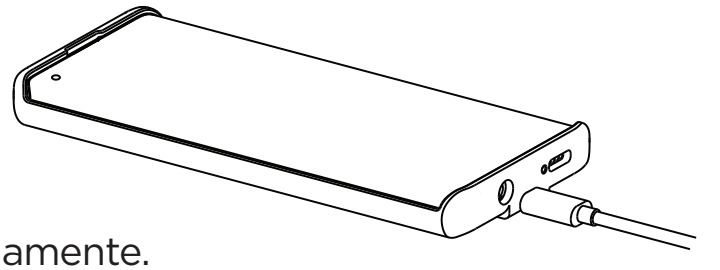

Desinstalação:

1. Mantenha a parte inferior do telefone e a capa conectados. Solte levemente a capa da parte superior do telefone Motorola Edge, apenas o suficiente para sair do telefone.
2. Mantenha o alinhamento na parte inferior do telefone com a parte inferior da capa e deslize o telefone para a parte superior da capa, para desencaixar a porta USB-C do telefone da porta USB-C da capa.

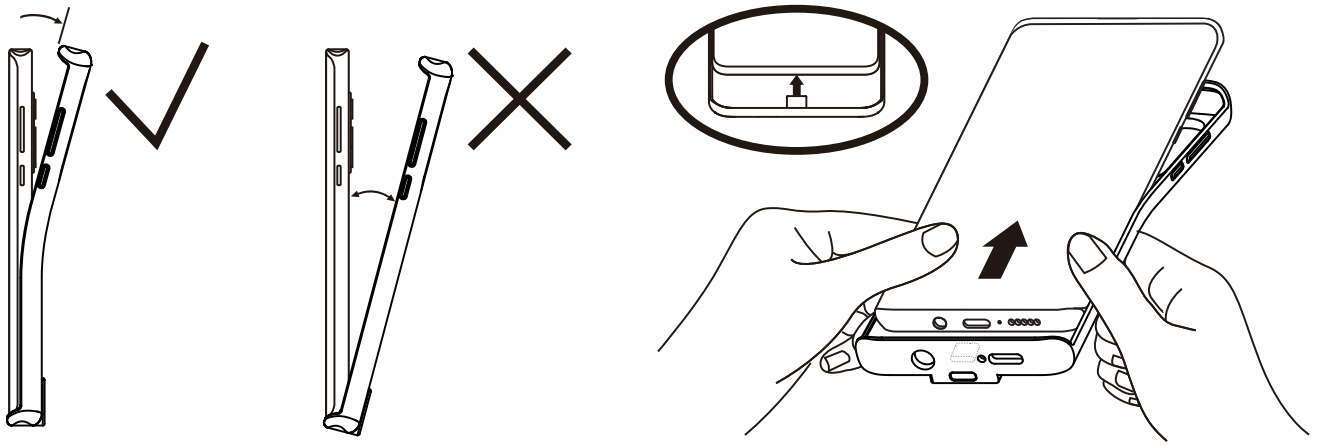

Pelo Brasil:

ANATEL
Agência Nacional de Telecomunicações

www.anatel.gov.br

Este equipamento não tem direito à proteção contra interferência prejudicial e não pode causar interferência em sistemas devidamente autorizados.

Diretrizes sobre Resíduos de Equipamentos Elétricos e Eletrônicos (REEE)

Este símbolo, no produto ou em sua embalagem, indica que este produto não deve ser descartado com outros resíduos domésticos. Os clientes ou usuários finais do produto devem entrar em contato com o fornecedor local do produto, ou um centro de serviços autorizado, para obter informações sobre o sistema de descarte de lixo eletrônico.

Para garantia e mais informações:
motorolachargers.com/phonecases/

Deutsch

Eigenschaften:

1. Eingebauter 10W Qi-kompatibler Empfänger, 5V/1A, 9V/1,1A.
2. Der kabelgebundene USB-C-Eingang akzeptiert 5V/3A, 9V/2A, QC3.0 und USB-PD 18W TurboPower-Durchgang durch kabelgebundenes Laden.

Installation:

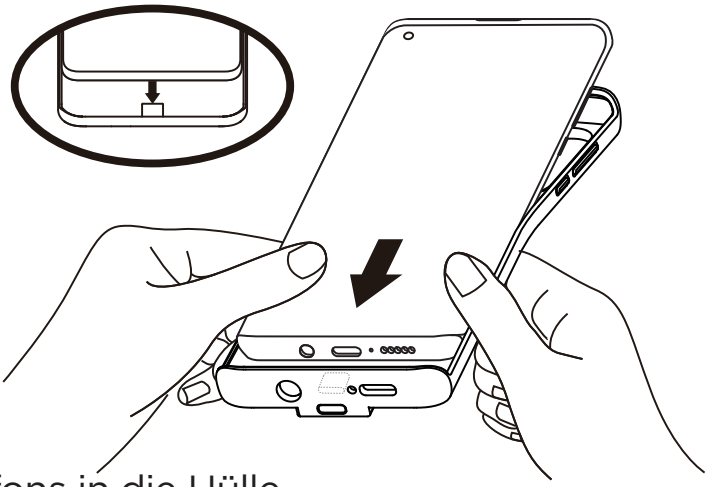

1. Schließen Sie Ihren Motorola Edge USB-C-Ladeanschluss an den USB-C-Anschluss der kabellosen Ladehülle an.
2. Richten Sie die Unterseite des Telefons an der Unterseite der Hülle aus und drücken Sie sie hinein.
3. Schieben Sie den Rest des Telefons in die Hülle.

Zum kabellosen Laden:

Verwenden eines kabellosen Qi-Ladepads

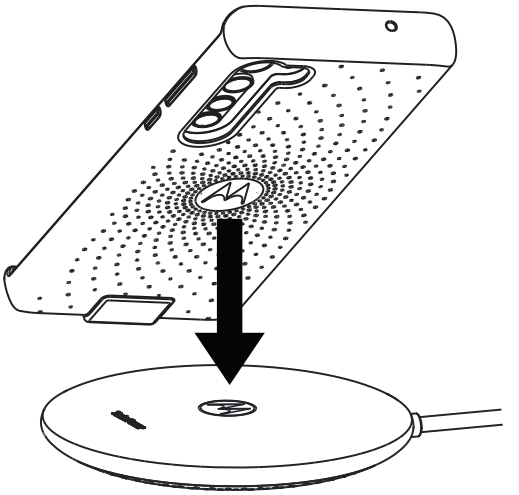

1. Richten Sie das Motorola M-Logo an der Mitte eines kabellosen Ladepads aus.
2. Legen Sie die Rückseite der Hülle auf ein kabelloses Qi-Ladegerät.
3. Stellen Sie sicher, dass das kabellose Ladegerät geladen wird.
4. Ihr Gerät wird aufgeladen.
   Bemerkung: Das kabellose Ladepad und das USB-C-Kabel sind separat erhältlich.

Zum direkten Laden:

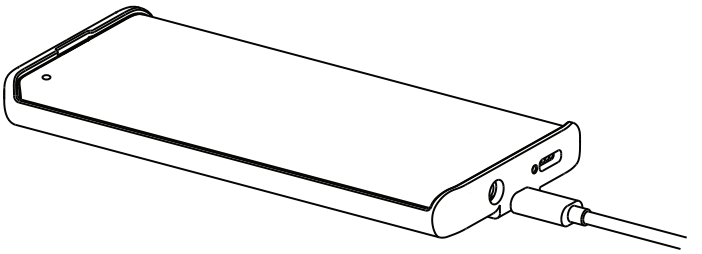

Schließen Sie Ihr Ladegerät und das USB-C-Kabel an den USB-C-Anschluss an der Unterseite der Telefonhülle an.

Bemerkung: Ladegerät und USB-C-Kabel sind separat erhältlich.

Deinstallation:

1. Lassen Sie die Unterseite des Telefons und der Hülle verbunden, und lassen Sie die Oberseite des Motorola Edge-Telefons leicht los, damit sie gerade so weit aus dem Rahmen der Hülle herausragt.
2. Behalten Sie die Ausrichtung der Unterseite des Telefons mit der Unterseite der Hülle bei und ziehen Sie das Telefon aus der Hülle heraus, um den USB-C-Ladeanschluss vom USB-C-Anschluss der Hülle zu trennen.

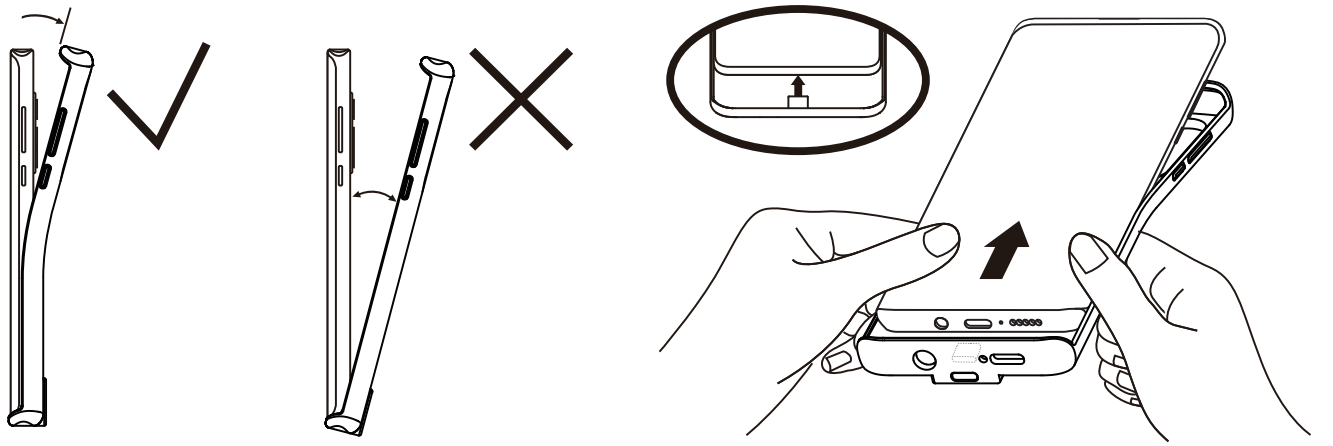

Recycling von Elektro-und Elektronik-Altgeräten (Waste Electrical and Electronic Equipment, WEEE)

Dieses Symbol auf dem Produkt oder auf der Verpackung zeigt an, dass dieses Produkt nicht mit Ihrem sonstigen Hausmüll entsorgt werden darf. Kunden oder Endverbraucher sollten sich an ihren örtlichen Anbieter oder ihr Service-Center wenden, um Informationen über das Abfallsammelsystem zu erhalten.

Für Garantie und weitere Informationen:
motorolachargers.com/phonecases/

Italiano

Caratteristiche:

1. Ricevitore compatibile Qi da 10W integrato, 5V/1A, 9V/1,1A.
2. L'ingresso USB-C cablato accetta il passaggio 5V/3A, 9V/2A, QC3.0 e USB-PD 18W TurboPower attraverso la ricarica cablata.

Installazione:

1. Collegare la porta di ricarica USB-C Motorola Edge al connettore USB-C nella custodia di ricarica wireless.
2. Allineare la parte inferiore del telefono con la parte inferiore della custodia e spingere.
3. Spingere il resto del telefono nella custodia.

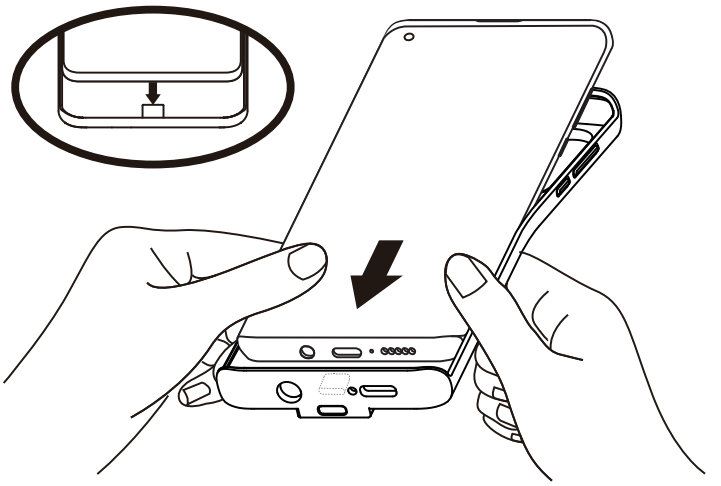

Per la ricarica wireless:

Utilizzando una base di ricarica wireless Qi

1. Allineare il logo Motorola M con il centro di una base di ricarica wireless.
2. Posiziona il retro della custodia su una base di ricarica wireless Qi.
3. Verificare che la base di ricarica wireless sia in carica.
4. Il dispositivo inizierà a caricarsi.
   Nota: la base di ricarica wireless e il cavo USB-C sono venduti separatamente.

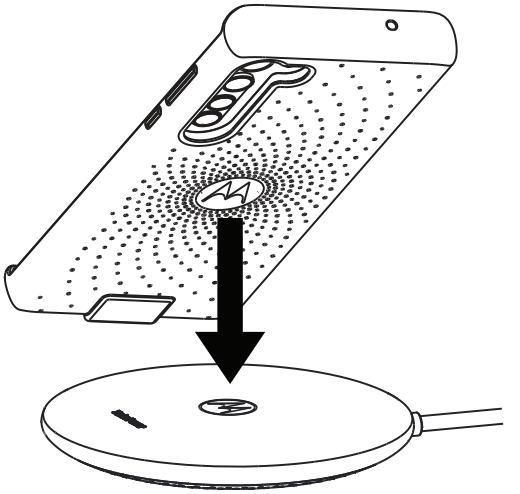

Per il caricamento diretto:

Collega il caricabatterie e il cavo USB-C alla porta USB-C nella parte inferiore della custodia del telefono.

Nota: il caricatore da muro e il cavo USB-C sono venduti separatamente.

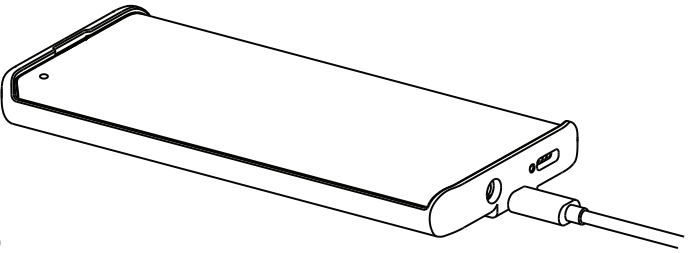

Disinstallazione:

1. Tenere la parte inferiore del telefono e la custodia collegate, rilasciare leggermente la parte superiore del telefono Motorola Edge per quel tanto che basta per uscire dalla cornice della parte superiore della custodia.
2. Mantenere l'allineamento della parte inferiore del telefono con la parte inferiore della custodia e tirare il telefono verso l'alto dalla custodia per sganciare la porta di ricarica USB-C dal connettore USB-C della custodia.

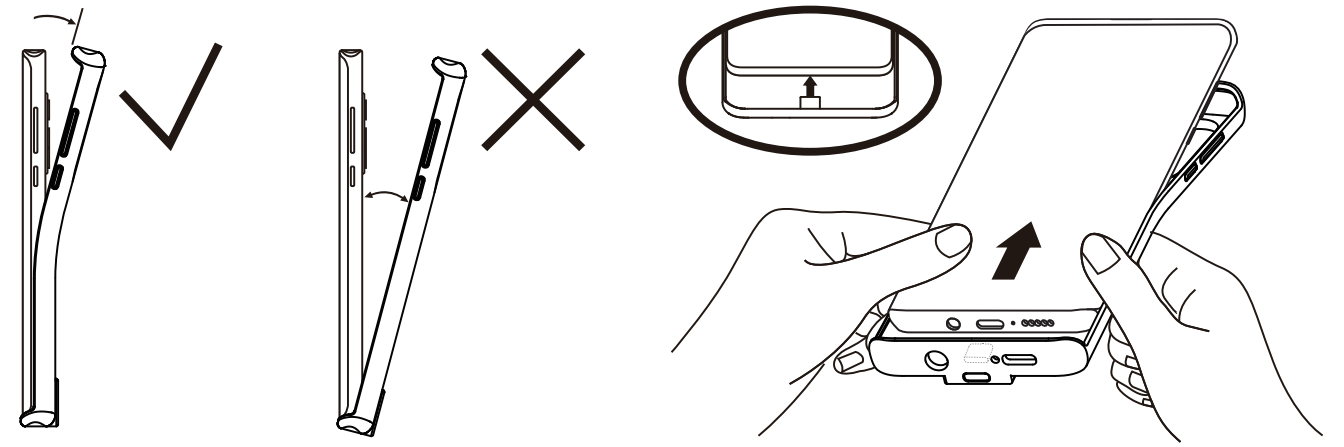

Riciclaggio dei rifiuti di apparecchiature elettriche ed elettroniche (RAEE)

Questo simbolo sul prodotto o sulla sua confezione indica che il prodotto non deve essere smaltito insieme agli altri rifiuti domestici. I clienti o gli utenti finali devono contattare il proprio fornitore di apparecchiature o centro servizi locale per informazioni sul sistema di raccolta dei rifiuti.

Per garanzia e ulteriori informazioni:
motorolachargers.com/phonecases/

Rev. 202010-01

Manufactured, distributed or sold by Salom Ltd., official licensee for this product. MOTOROLA and Stylized M Logo are trademarks or registered trademarks of Motorola Trademark Holdings, LLC, and are used under license. All other trademarks are the property of their respective owners.
© 2020 Motorola Mobility LLC. All rights reserved.

motorola.com

Printed in China

This equipment has been tested and found to comply with the limits for a Class B digital device, pursuant to part 15 of the FCC Rules. These limits are designed to provide reasonable protection against harmful interference in a residential installation. This equipment generates, uses and can radiate radio frequency energy and, if not installed and used in accordance with the instructions, may cause harmful interference to radio communications. However, there is no guarantee that interference will not occur in a particular installation. If this equipment does cause harmful interference to radio or television reception, which can be determined by turning the equipment off and on, the user is encouraged to try to correct the interference by one or more of the following measures:

- Reorient or relocate the receiving antenna.
- Increase the separation between the equipment and receiver.
- Connect the equipment into an outlet on a circuit different from that to which the receiver is connected.
- Consult the dealer or an experienced radio/TV technician for help.

Caution: Any changes or modifications to this device not explicitly approved by manufacturer could void your authority to operate this equipment.

This device complies with part 15 of the FCC Rules. Operation is subject to the following two conditions: (1) This device may not cause harmful interference, and (2) this device must accept any interference received, including interference that may cause undesired operation.

The device has been evaluated to meet general RF exposure requirement.