SINOVAN®

INSTRUCTION MANUAL

MINI COOI VIRTUOSITY

NO.S8982A NO.S8982B NO.S8988A NO.S8988B

Warning: Changes or modifications to this unit not expressly approved by the party responsible for compliance could void the user's authority to operate the equipment.

NOTE: This equipment has been tested and found to comply with the limits for a Class B digital device, pursuant to Part 15 of the FCC Rules. These limits are designed to provide reasonable protection against harmful interference in a residential installation. This equipment generates, uses and can radiate radio frequency energy and, if not installed and used in accordance with the instructions, may cause harmful interference to radio communications.

However, there is no guarantee that interference will not occur in a particular installation. If this equipment does cause harmful interference to radio or television reception, which can be determined by turning the equipment off and on, the user is encouraged to try to correct the interference by one or more of the following measures:

Reorient or relocate the receiving antenna.

Increase the separation between the equipment and receiver.

Connect the equipment into an outlet on a circuit different from that to which the receiver is connected.

Consult the dealer or an experienced radio/TV technician for help.

SAVE THESE INSTRUCTIONS.

READ COMPLETE INSTRUCTIONS BEFORE USE.

How to bind

1.Turn on the vehicle first,then turn on the transmitter.

2. When the light of the transmitter is flash, that mean it's matching.

3. If the light is on and not flash, that means they are matched.

4.If it doesn't complete the binding process within 8 seconds, please turn off both the vehicle and transmitter and re-start the binding process.

5.When the binding process is complete,whenever you switch the vehicle and transmitter on and off, it searches for the memorised code and will only lock onto the transmitter signal containing that code.

6.If you have more than two vehicles,please bind them one by one.When the second vehicle is binding,always keep the first vehicle and transmitter on.

7.Please turn off both the vehicle and transmitter and re-start the binding process if you are changing to another 2.4GHZ transmitter.

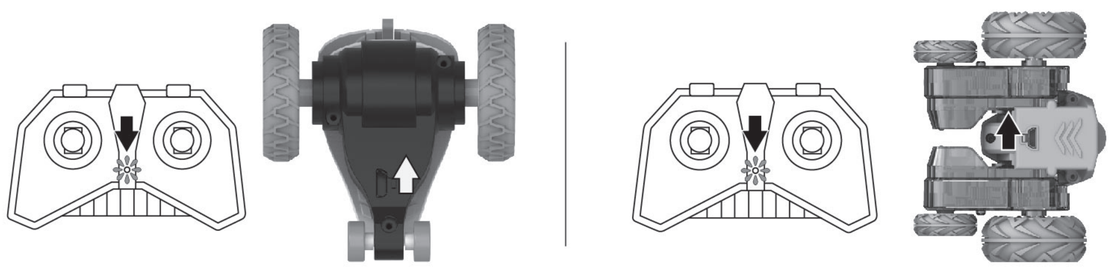

NO.S8982A/B

Contents

-RC Vehicle x 1
-RC Transmitter x 1
-Instruction Manual x 1
-USB cable x 1

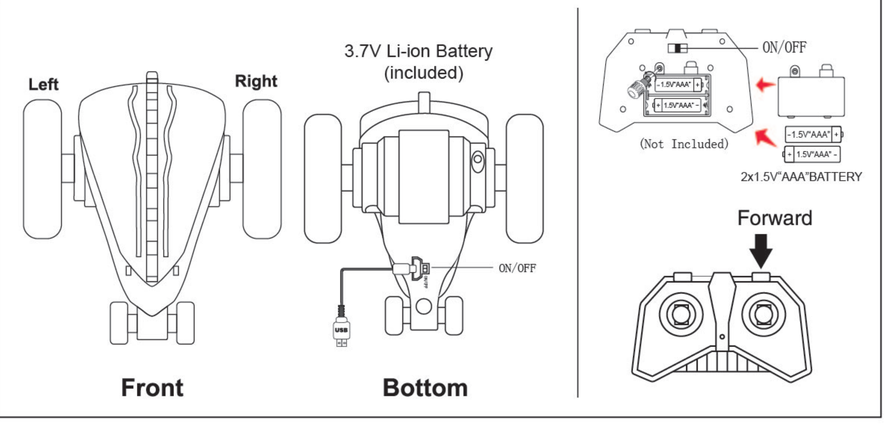

How to play

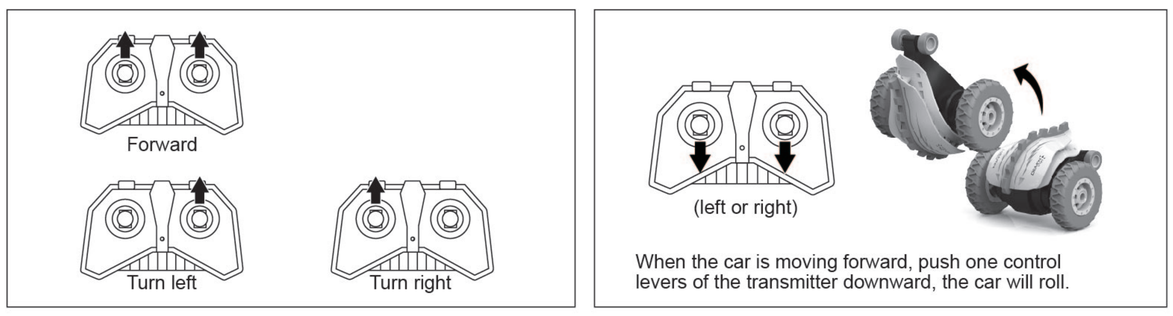

When the car is moving forward, push one control levers of the transmitter downward, the car will roll.

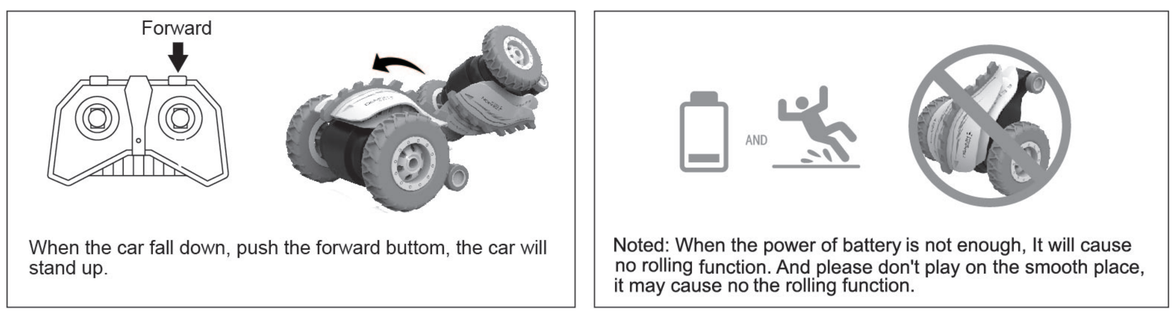

When the car fall down, push the forward buttom, the car will stand up.

Noted: When the power of battery is not enough, It will cause no rolling function. And please don't play on the smooth place, it may cause no the rolling function.

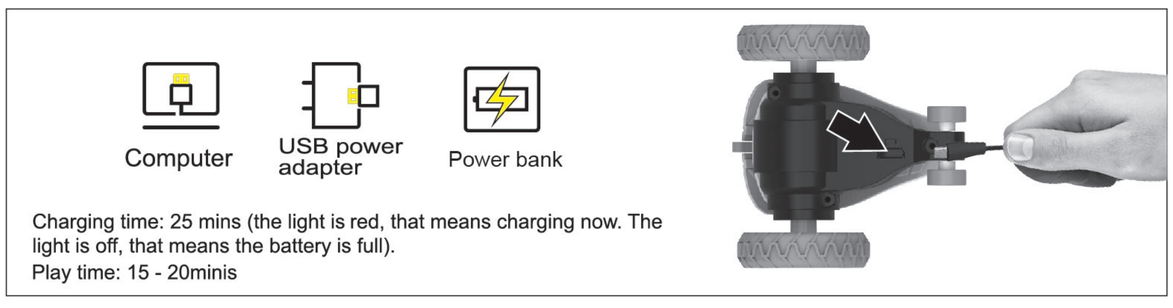

Charging time: 25 mins (the light is red, that means charging now. The light is off, that means the battery is full).

Play time: 15 - 20minis

NO.S8988A/B

Contents

-RC Vehicle x 1
-RC Transmitter x 1
-Instruction Manual x 1
-USB cable x 1

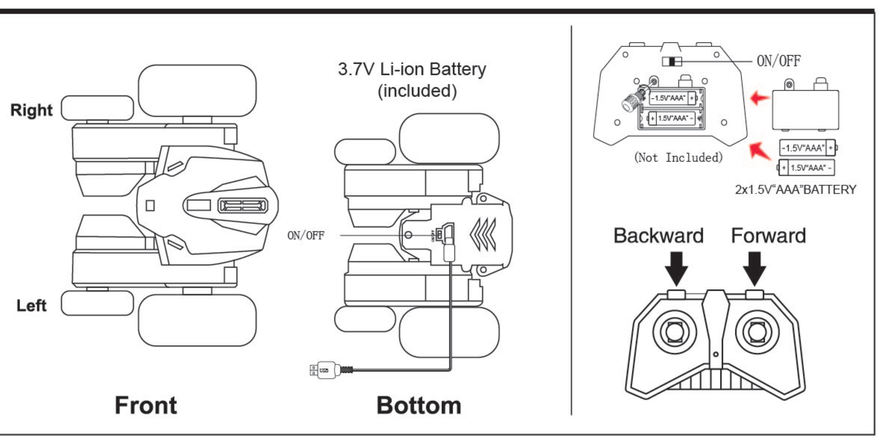

How to play

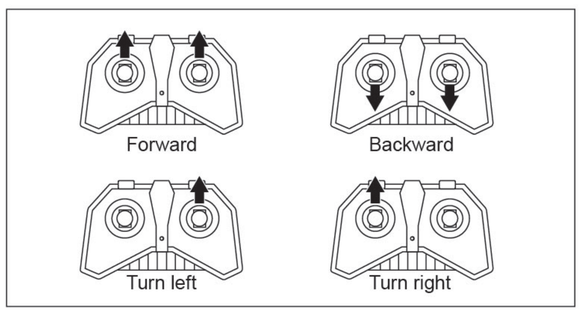

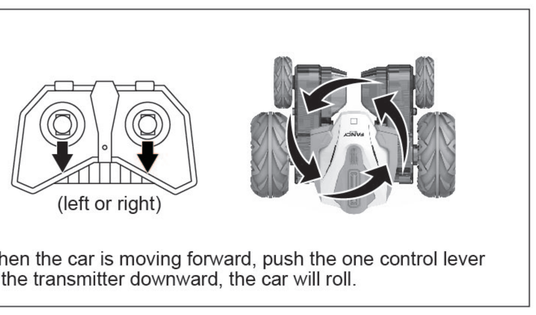

When the car is moving forward, push the one control lever of the transmitter downward, the car will roll.

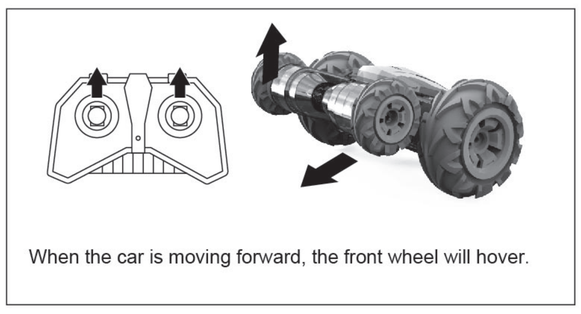

When the car is moving forward, the front wheel will hover.

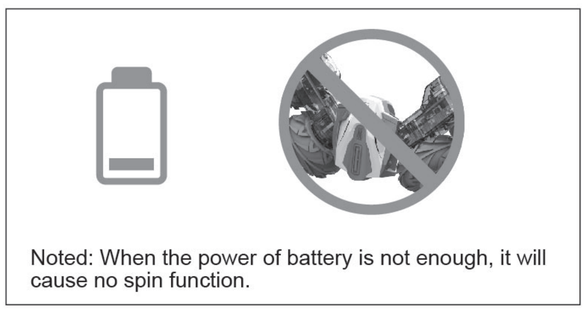

Noted: When the power of battery is not enough, it will cause no spin function.

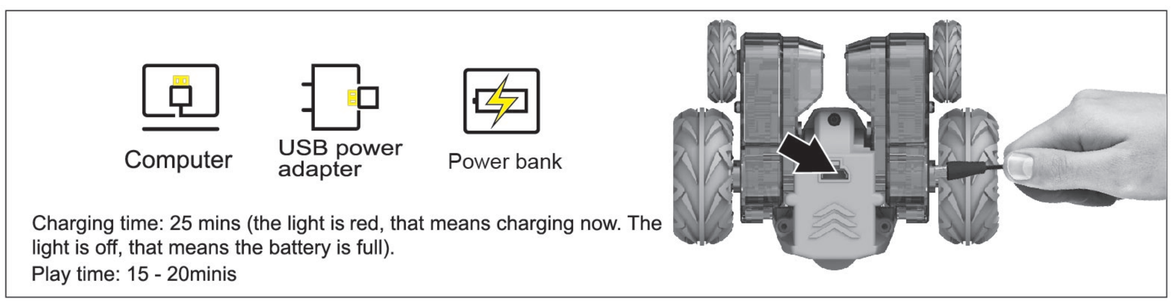

Charging time: 25 mins (the light is red, that means charging now. The light is off, that means the battery is full).

Play time: 15 - 20minis

BATTERY WARNING:

Do not mix old and new batteries.

Do not mix alkaline, standard(carbon-zinc), or rechargeable (nickel—cadmium)batteries.

Insert batteries using the correct polarity. Do not short-circuit the supply terminal.

Remove batteries when not in use. Recycle or dispose of exhausted batteries according to federal, state. And local laws.

Do not dispose of batteries in afire-they may leak or explode.

Only use manufacture specified battery(ies), charger(s) and/or adapter, if applicable, specified by the manufacturer.

Always use, replace, and recharge{if applicable)batteries under adult supervision.

Non-rechargeable batteries are not to be recharged:

Rechargeable batteries are to be removed from the for before being charged;

Rechargeable batteries are only lo be charged under adult supervision;

Exhausted batteries are to be removed from the toy;

The supply terminals are not to be short-circuited.

Packaging has lo be kept since it contains important information.

Product may vary slightly from image shown

Performance Tips: Do not drive the vehicle on grass, sand rocks or go through water.

Do not drive the vehicle into any hard object.

SAFETY PRECAUTIONS

Do not operate during thunderstorms or rain.

Avoid water, sand and snow when operating the car.

Do not submerge car or controller in water.

Never operate your car on the street or highway

Never operate your car in a confined or crowded area and do not use people or animals as obstacles.

Do not run your car into furniture, objects or hard surfaces, as this will cause damage to both the objects and the car.

Keep fingers, hair and loose clothing away from the tires, gears and motor while the car is switched to "ON".

Do not leave the car or transmitter near sources of heat or under direct sunlight for long periods of time.

Do not leave the car or transmitter outside overnight. Dampness is harmful to interior components.

Remove all batteries when not in use to avoid accidental operation

Adult supervision is recommended when operating this car.

Performance tips

1. Do not drive on grass, dirt, sand, dusts, carpet or through water
2. Do not drive in windy or rainy weather
3. Avoid the vehicle directly impacting with obstacles
4. Switch OFF the power when not in use lo prevent damage to the vehicle or transmitter due to leakage of electrolytes from batteries
5. Remove all batteries from the vehicle and transmitter when not in use for a long period of time.
6. Keep fingers, hair and loose clothing away from the wheels
7. The operating range can be affected by a variety of factors:
   a) Low Voltage of batteries in the transmitter or vehicle
   b) Interference from other items that emit radio frequency signals
8. Outdoor usage is recommended in order to get optimum control range
9. It is recommended to play with the vehicle on a clean and smooth surface
10. Clean the battery compartment to make sure it is free from dust to prevent poor contact of batteries

Cautions

1. The charger to be used with the toy should be regularly examined for potential hazard, such as damage to the cable or cord, plug, enclosure of other parts and that in the event of such damage, the toy must not be used until that damage had been properly removed.

2.Do not attempt to disassemble the vehicle or transmitter

3. Do not operate the vehicle with the same frequency as other player(s) in the same location as this will interfere and make the vehicle go out control.

4. Make sure the batteries are installed with correct polarities (+/-)as shown inside the battery compartment

5. Remove the package and take out all accessories before giving the Vehicle and Transmitter to a child to play with

The packaging and instruction manual contains important information. Please keep them for future reference.

Warning! Choking Hazard. Not suitable for children under the age of 3 years due to small parts.

We reserve the right to improve/amend specifications and colours without notice.

Warning! The Antenna of the vehicle is not to be inserted into socket outlets.