Manufacturer: Yunjing Intelligence Technology (Dongguan) Co.,Ltd

Zip code: 523808

Address: Building 7, No.4 Xingye Rd, Songshan Lake Park , Dongguan

WWW NARWAL COM

NARWAL

User's Manual

Narwal FREO Robot Vacuum and Mop

Model: YJCC012

Dear user,

Thank you for choosing Narwal. To have the best experience possible, please read this manual and related illustrations carefully before using our product and save it for future reference . . As due to continuous updates, the actual product may not be completely consistent with the description in manual, please refer to the actual product.

In case of any problem during operation, please consult Narwal for after-sales customer services using the following contact information:

1. Call the Narwal Customer Service Center: 1-866-939-2153 (9:00-18:00 PT);
2. Chat with customer service on narwal.com or reach us at support@narwal.com;
3.Scan the QR code below to join Narwal's Facebook group, where you can ask questions, connect with other users, and participate in fun events.

Scan the QR code below on the right to download the Narwal app in advance, get familiar with more functions and enjoy a more convenient smart life.

Wish you happy cleaning with Narwal!

Facebook group

Download app

Contents

Product Introduction	03
Packages	03
Product Overview	04
Control Panel Overview	08
Low-power mode	09
Description of display working modes	Manual electronic copy
Product Instruction	10
Network Connection with APP	Manual electronic copy
Notices	10
Before Use	10
First Use	Manual electronic copy
Detailed Explanation of	Manual electronic copy
Cleaning Modes	Manual electronic copy
Cleaning and Maintenance	Manual electronic copy
Fault Analysis and Troubleshooting	Manual electronic copy
Common Errors	
Error Code Prompts	Manual electronic copy
Other Issues	Manual electronic copy
	Manual electronic copy
Specifications	12
Warranty Service	13

Scan to read the electronic manual

Important Safety Instructions

When using an electrical robot, basic precautions should always be followed, including the following : **READ ALL INSTRUCTIONS BEFORE USING (THIS APPLIANCE)**

WARNING: To reduce the risk of injury or damage, read the following safety precautions before setting up, operating, and maintaining your robot.

WARNING – To reduce the risk of fire, electric shock, or injury:
1. Do not leave appliance when plugged in. Unplug from outlet when not in use and before servicing.
2. This appliance is provided with double insulation. Use only identical replacement parts. See instructions for Servicing of Double-Insulated Appliances.
3. SERVICING OF DOUBLE-INSULATED APPLIANCES
A double-insulated appliance is marked with one or more of the following: The words " DOUBLE INSULATION" or " DOUBLE INSULATED" or the double insulation symbol (square within a square). ⧈

In a double-insulated appliance, two systems of insulation are provided instead of grounding.-No grounding means is provided on a double-insulated appliance, nor should a means for grounding be added to the appliance. Servicing a double-insulated appliance requires extreme care and knowledge of the system, and should be done only by qualified service personnel.Replacement parts for a double-insulated appliance must be identical to the parts they replace.

General

- Do not allow to be used as a toy. Small children, pets and the elderly should be supervised when your robot is operating.
- Do not sit, stand or place any object on your robot or the base station.
- Only use as instructed in this manual.
- Only use attachments recommended or sold by the manufacturer.
- Your robot is not water-proof. Do not spray or pour liquids on your robot. If liquid spills on your robot, dry immediately.
- For INDOOR use ONLY. Do not use your robot in outdoor, commercial or industrial environments. Do not use your robot on wet surfaces or surfaces with standing water.
- Do not use your robot or base station if it is damaged, is not working properly, has been dropped, left outdoors, or come into contact with water. The robot must be repaired by the manufacturer or its authorized service agent.
- Do not use with damaged cord or plug.
- Do not pull or carry by cord, use cord as a handle, close a door on cord, or pull cord around sharp edges or corners. Do not run appliance over cord. Keep cord away from heated surfaces.
- Do not unplug by pulling on cord. To unplug, grasp the plug, not the cord. Turn off all controls before unplugging.
- To Reduce the Risk of Fire and Electric Shock due to internal component damage, use only NARWAL cleaning fluid intended for use with this appliance. See the Cleaning Fluid section of this manual.
- Place the cords from other appliances out of the area to be cleaned.
- Do not operate the vacuum in an area where there are lit candles or fragile objects on the floor to be cleaned.
- Do not allow children to sit on the vacuum.
- Recharge only with the charger specified by the manufacturer. A charger that is suitable for one type of battery pack may create a risk of fire when used with another battery pack.
- Under abusive conditions, liquid may be ejected from the battery; avoid contact. If contact accidentally occurs, flush with water. If liquid contacts eyes, additionally seek medical help.
- Liquid ejected from the battery may cause irritation or burns.
- Do not use a battery pack or appliance that is damaged or modified. Damaged or modified batteries may exhibit unpredictable behavior resulting in fire, explosion or risk of injury.
- Do not expose an appliance to fire or excessive temperature.
- Follow all charging instructions and do not charge the battery pack or appliance outside of the temperature range specified in the instructions. Charging improperly or at temperatures outside of the specified range may damage the battery and increase the risk of fire.
- Only used with base station (Model: YJCB012) for charging the application.
- Do not use and store in extremely hot or cold environments. Do not operate below 0˚C/32˚F or above 35˚C/95˚F . Do not store below -20˚C/-4˚F or above 70˚C/158˚F . Charge your robot in temperature between 5˚C/41˚F and 30˚C/86˚F. Keep your robot away from fire or places with temperatures higher than 130˚C/266˚F . Otherwise, your robot may explode.
- Keep the front side of your robot facing upward at all times when transporting, moving, or operating your robot, or replacing any component for it. Your robot may be damaged if turned upside down.
- Do not expose your robot to direct sunlight.

Operating your Robot

- Do not handle plug or your robot with wet hands.
- Ensure a clearance of 1 meter / 3 feet for a 180° range in front of the base station.
- Before using your robot, pick up objects on the floor, including clothing, loose papers, cords for blinds or curtains, power cords, and any fragile objects. If your robot passes over a cord and drags it, there is a chance an object could be pulled off a table or shelf. Ensure that no sharp objects, such as blades, scissors, or screwdrivers, are in the cleaning area.
- Remove lit candles and fragile items from on top of furniture before operating your robot. Your robot may hit or bump into the furniture and knock off items on top.
- Ensure that your robot will operate on indoor flat floors and that there are no stairs or barriers higher than 15 mm / 0.5inch in areas to be cleaned. If there is a drop off in the cleaning area due

to a step or stairs, you should operate your robot to ensure that it can detect the step without falling over the edge, or specify a no-go area by placing a magnetic strip provided by the manufacturer or build a physical barrier of no less than 25 mm / 1 inch high so as to prevent the robot from falling. Make sure the physical barrier is not a trip hazard.

- The robot will move around automatically. Therefore, watch your step in the operation areas of the robot to avoid step on it. Take care of babies, children, pets, the blind and the elderly if they are near a running robot. Never operate your robot in a room where an infant or child is sleeping.
- Ensure network access in the room so that you can view your robot working status through the APP on your phone.
- Do not move the robot randomly because it will result in positioning failure of the robot. If you move items in the cleaning area after map creation, such as couch, tea table, or dinning table, your robot may create a map again, which is normal.
- Keep hair, loose clothing, fingers, and all parts of body away from any openings and moving parts.
- Do not allow your robot to pick up large objects like stones, large pieces of paper or any item that may clog your robot.
- Your robot may get blocked by objects. Please turn off power and then manually remove the obstacle.
- Do not put any object into openings. Do not use with any opening blocked; keep free of dust, lint, hair, and anything that may reduce air flow.
- Do not use your robot to pick up flammable or combustible materials, such as gasoline, printer or copier toner, or use in areas where they may be present.
- Do not use your robot to pick up anything that is burning or smoking, such as cigarettes, matches, hot ashes, or anything that could cause a fire.
- Do not use your robot in explosive or volatile areas or areas easy to leak or collect static electricity, such as a gas station.
- Anytime you encounter a liquid leak, stop using your robot, turn off the power, and contact after-sales personnel.
- In cleaning mode, add detergent specified by the manufacturer to the clean water tank. Non-designated detergent may cause damage to your robot.
- During and after mopping, the floor will be wet. Be careful to avoid slipping.
- When using the mopping function, it is normal for overflowed water to collect below the base station. Clean the excess water with a dry towel.
- After mopping operation, the base station will dry the mop. During this process, do not pull out the plug or disconnect power to the base station.
- Do not leave appliance when plugged in. Unplug from outlet when not in use and before servicing.
- Use extra care when cleaning on stairs.
- Do not use without dust bag and/or filters in place.
- Prevent unintentional starting. Ensure the switch is in the off-position before connecting to battery pack, picking up or carrying the appliance. Please do not touch the power switch when holding the robot or the base station. Please do not hold the robot or the base station while they are charging.
- Disconnect the battery pack from the appliance before making any adjustments, changing accessories, or storing appliance. Such preventive safety measures reduce the risk of starting the appliance accidentally.
- To maintain product safety, service must only be performed be a qualified repair person using identical replacement parts.

SAVE THESE INSTRUCTIONS

Cleaning and Maintenance

- Turn off the power switch before cleaning or maintaining your robot.
- Considering the limited capacity of the dust bin and water tank, empty the dust bin and water tank as soon as possible after hearing the alert.
- When not using the base station for a long period of time, please unplug it.
- Do not attempt to repair your robot or the battery pack, except as indicated in the instructions for use and care.
- Do not disassemble or modify your robot or alter the software by yourself. Only authorized maintenance personnel can replace faulty components to ensure device safety.
- Do not use a wet cloth or any liquid to wipe any part of the robot body.
- Vacuuming operation may get the side brush tangled by hair or fur and cleaning operation will result in wastewater in water tank. Clean the side brush and water tank after operation. Keep the water level below the Max mark on the tank so as to prevent overflowing and damaging your robot.
- Do not incinerate your robot even if it is severely damaged. The batteries can explode in a fire. Do not dispose your robot as an unclassified waste. Contact your local regulation department for information about recycling and disposal. If your robot is buried in a landfill or wasteyard, hazardous substances may leak into underground water and enter the food chain, which harms health and well-being. For more information about waste collection and recycling, contact your local sanitation department.

Battery, Power Cord and Charging Warnings

- Use only 100 V AC-240 V AC input power as required by the manufacturer. Otherwise, your robot may be damaged.
- Using your robot's battery improperly may result in fire or explosion. Do not heat, disassemble, puncture, or destroy your robot or its battery, nor incinerate them.
- Do not charge your robot for a prolonged time, otherwise the battery may be damaged.
- Before every use, check the battery pack for any signs of damage or leakage. Do not charge damaged or leaking battery packs. Do not use a battery pack or appliance that is damaged or modified. Damaged or modified batteries may exhibit unpredictable behavior resulting in fire, explosion and risk of injury.
- Under extreme conditions, liquid may be ejected from the battery; avoid contact. If contact accidentally occurs, flush with water. If liquid contacts eyes, immediately seek medical help. Liquid ejected from the battery may cause irritation or burns.
- Use your robot only with specifically designated battery packs. Use of any other battery packs may create a risk of injury and fire.
- Take care not to damage the power cord. Do not pull on or carry your robot or base station by the power cord, use the power cord as a handle, close a door on the power cord, or pull power cord around sharp edges or corners.
- Do not touch the connector of the power cord with wet fingers.
- Do not run your robot over the power cord.
- Keep power cord away from hot surfaces.
- Turn off all controls before unplugging. Do not unplug by pulling on cord. To unplug, grasp the plug, not the cord.
- Do not use if power cord is damaged. Power cord must be replaced by the manufacturer or its authorized service agent in order to avoid a hazard.
- When battery pack is not in use, keep it away from other metal objects, like paper clips, coins, keys, nails, screws or other small metal objects, that can make a connection from one terminal to another. Shorting the battery terminals may cause burns or a fire.
- Recharge only with the charger specified by the manufacturer. A charger that is suitable for one type if battery pack may create a risk of fire when used with another battery pack.

Laser Safety

The laser distance sensor of this product meets the standards for Class I Laser Products in IEC 60825-1: 2014 and will not generate hazardous laser radiation

Note:This equipment has been tested and found to comply with the limits for a Class B digital device, pursuant to Part 15 of the FCC rules. These limits are designed to provide reasonable protection against harmful interference in a residential installation.

This equipment generates, uses and can radiate radio frequency energy and, if not installed and used in accordance with the instructions, may cause harmful interference to radio communications. However, there is no guarantee that the interference will not occur in a particular installation. If this equipment does cause harmful interference to radio or television reception , which can be determined by turning the equipment off and on, the user is encouraged to try to correct the interference by one or more of the following measures: Reorient or relocate the receiving antennaIncrease the separation between the equipment and receiver. Connect the equipment into an outlet on a circuit different from that to which the receiver is connected. Consult the dealer or an experienced radio/TV technician for help.

This device complies with Part 15 of the FCC Rules.Operation is subject to the following two conditions:

(1) this device may not cause harmful interference, and

(2) this device must accept any interference received, including interference that may cause undesired operation.

FCC/IC RF RADIATION EXPOSURE STATEMENT CAUTION:

Warning: Changes or modifications to this unit not expressly approved by the party responsible for compliance could void the user's authority to operate the equipment.

This equipment complies with FCC radiation exposure limits set forth for an uncontrolled environment.This equipment should be installed and operated with minimum distance 20cm between the radiator & your body.

The device is compliance with RF exposure guidelines, users can obtain Canadian information on RF exposure and compliance.The minimum distance from body to use the device is 20cm.
Le présent appareil est conforme Après examen de ce matériel aux conformité ou aux limites d'intensité de champ RF, les utilisateurs peuvent sur l'exposition aux radiofréquences et la co nformité and compliance d'acquérir les informations correspondantes. La distance minimale du corps à utiliser le dispositif est de 20cm.

CAN ICES-003 (B)/NMB-003(B)
IC CANADA

This device contains licence-exempt transmitter(s)/receiver that comply with Innovation, Science and Economic Development Canada's licence-exempt RSS(s). Operation is subject to the following two conditions:1.This device may not cause interference. 2.This device must accept any interference, including interference that may cause undesired operation of the device.

Warning: Changes or modifications to this unit not expressly approved by the party responsible for compliance could void the user's authority to operate the equipment.

L' émetteur/récepteur exempt de licence contenu dans le présent appareil est conforme aux CNR d' Innovation, Sciences et Développement économique Canada applicables aux appareils radio exempts de licence. L' exploitation est autorisée aux deux conditions suivantes:

(1) L' appareil ne doit pas produire de brouillage;

(2) L' appareil doit accepter tout brouillage radioélectrique subi, même si le brouillage est susceptible d'en compromettre le fonctionnement.

Product Introduction

Package Contents

Main Units

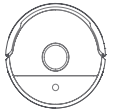

Robot*1

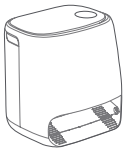

Base station*1

Accessories

Mopping module*2

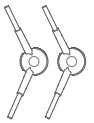

Side brush*2

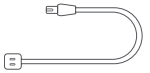

Power cord*1

Specially Formulated Floor Cleaner*1

Product Overview

Base station

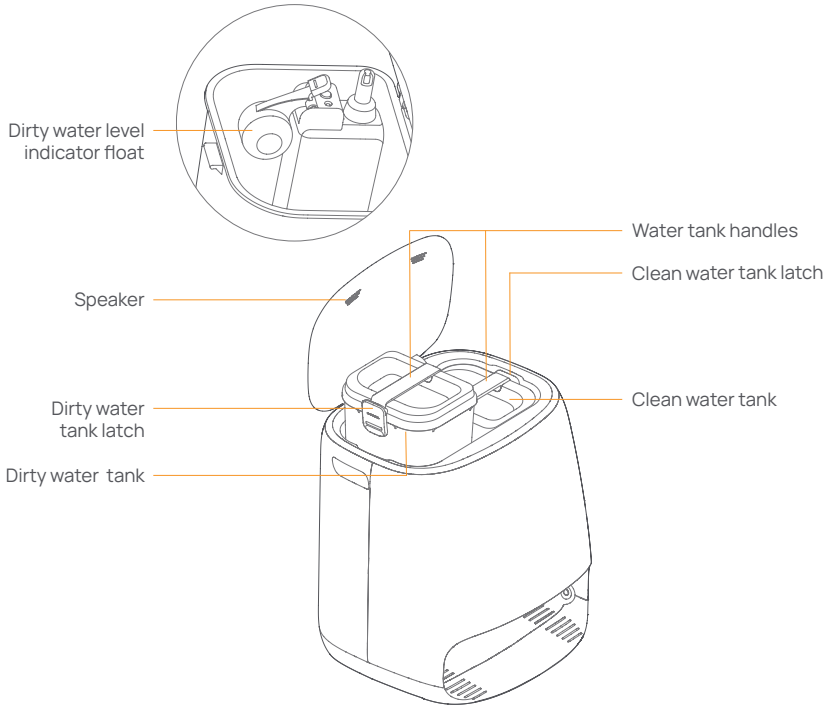

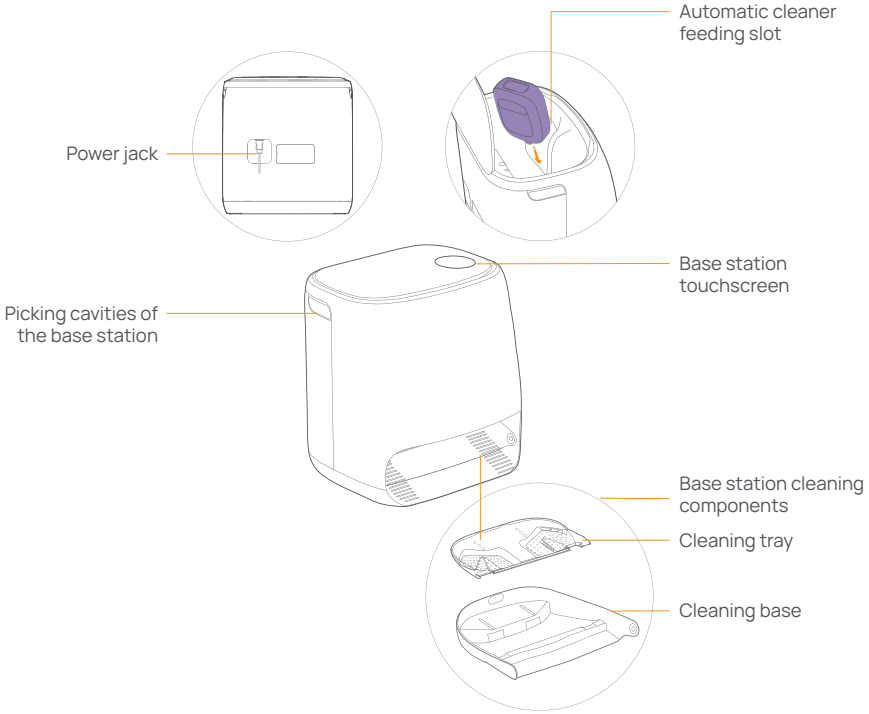

Robot

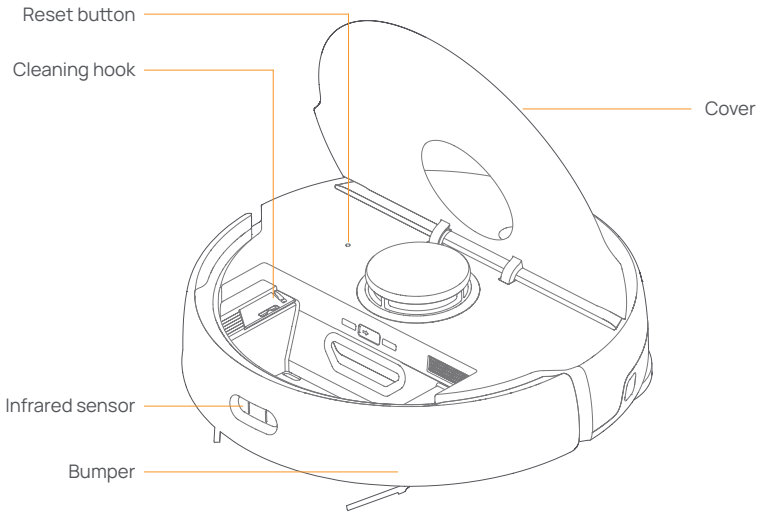

Side

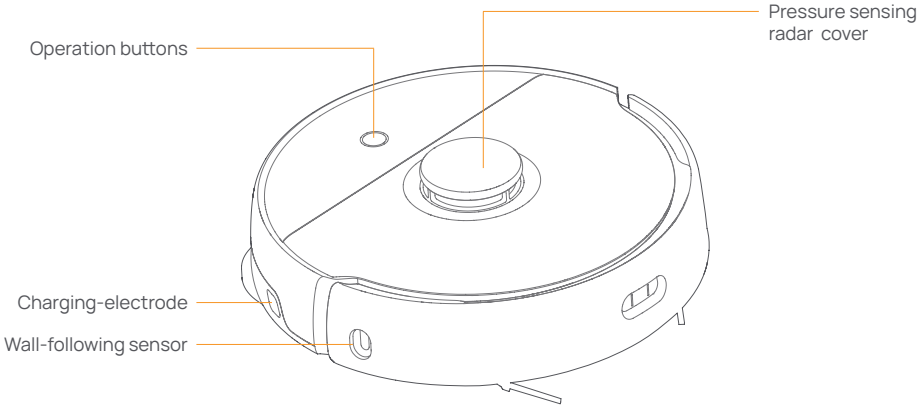

Bottom

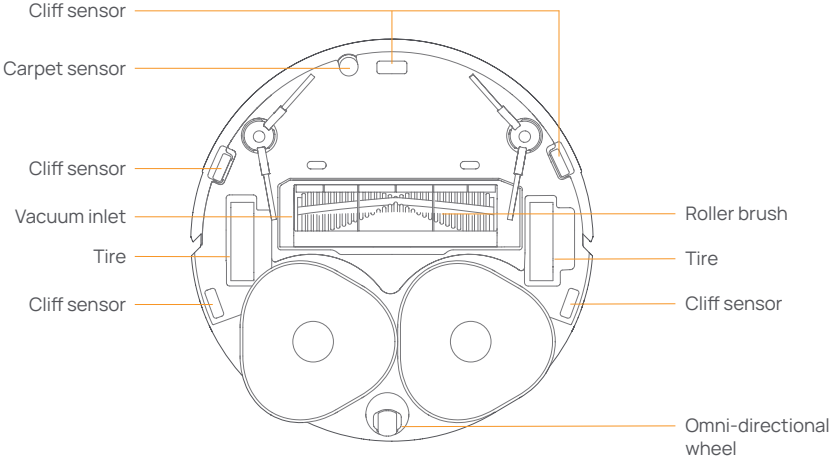

Dustbox

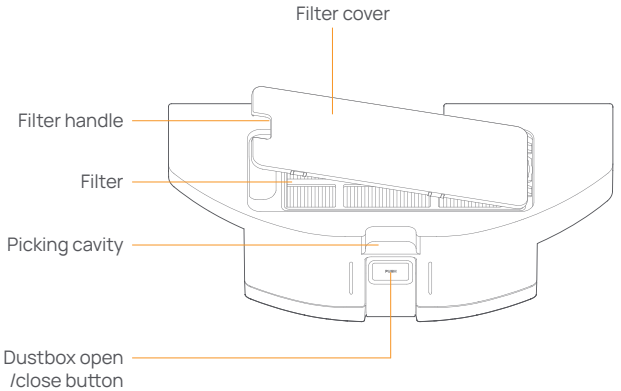

Control Panel Overview

Robot Control Panel

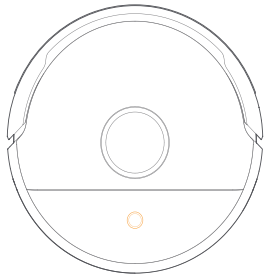

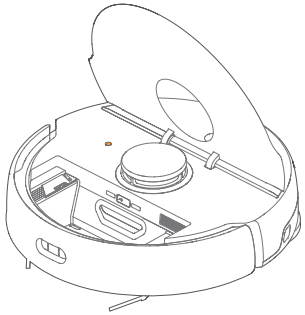

Button/indicator light	Operations and Functions
Ring button	Click: Clean the whole house Press and hold the button for 3 seconds: Power on/off
Ring indicator light	Solid white indicator: The device is powered on/drying/charging White breathing light: Standby Blue breathing light: Networking Solid purple indicator: Task in progress Purple breathing light: Task is paused Red breathing light: Error
Reset button	Press and hold the button for 5s to reset the robot

Low-power mode

1. Click the low-power mode.

2. Click "Confirm".

3. Enter low-power mode.

Use

Notices

This product is only used to clean floors in household environments, and cannot be used outdoors (such as open balconies), areas other than floors (such as sofas or window sills), high places, or commercial/industrial environments.

1. Do not use in areas with steep drop-offs (such as lofts or top of furniture) without guardrails

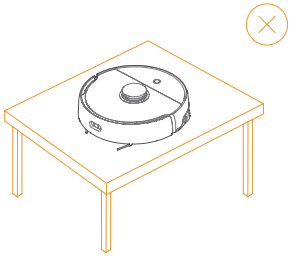

2. Do not place any objects (including human bodies or pets) on stationary or moving robots.

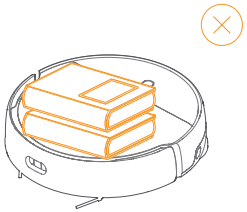

3. To prevent personal injury, when the product is running, do not put hair, fingers, etc. near the mop, side brush, Lidar sensor, vacuum inlet or cleaning fins

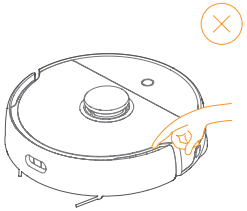

4. Do not allow the robot to vacuum up hard or sharp objects

5. To prevent damage to the device, do not place the robot near any heat or water sources (such as radiators or faucets).

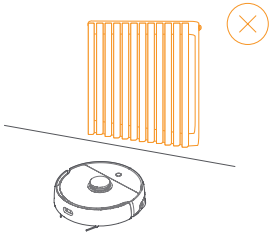

Other Notices

6. To prevent damage to the robot, do not run the robot with the top cover opened.
7. To lift the robot, grasp the left and right sides of the body with both hands and lift it perpendicularly to the floor.
8. To prevent the robot from falling, do not lift the base station when the robot is inside i t.
9. People with physical, mental, or sensory impairments (including children) should use or operate this product under supervision or guidance of their guardians.
10. The robot is not a toy. Keep a close eye on children and pets when the product is running, and keep them away from it as much as possible.
11. Do not place accessories such as the Floor Cleaner and mopping modules in areas accessible to children.
12. Do not place the product packaging (bags, foam, etc.) of this product in areas accessible to children.
13. Do not use the robot to clean long pile carpets.
14. Do not use the robot to clean any burning objects (such as cigarette butts).
15. Clean and maintain the robot and base station with the power supply turned off and the power plug removed.
16. Do not wipe any part of the robot with a damp cloth or any liquid.
17. Do not use any battery, charger, or charging base manufactured by third parties.
18. Do not disassemble, repair, or modify the robot, base station, or battery without permission.
19. Do not throw away or store waste batteries without authorization; and hand them over to professional recycling agencies for dirty.
20. When this product is to be discarded, the battery must be removed. Before removal, ensure that the robot is turned off.
21. If the power cord is damaged or broken, stop using the robot immediately and contact our customer service department.

22. To transport the robot, make sure that it is turned off. It is recommended to transport it in the original packaging.
23. It is hazardous for the rotating brush to touch the power cord. Arrange the wires neatly before use.
24. To prevent the floor from being scratched, ensure that there is no sharp large-grained gravel or sharp objects on the floor when mopping.

Specifications

Specifications

Robot	Base station
Dimensions: 350*351.5*106 mm	Dimensions: 370*415*435mm
Color: White	Color: White
Weight: Approx. 4.35kg	Weight: Approx. 8.75kg
Battery: ≥5000mAh	Rated input: 100-240V~
Rated voltage: 14.4V	Rated output: 20V 3.0A
Rated power: 45W	Rated frequency: 50/60Hz
	Rated power: 72W