EVBOX

EVBox Iqon

Installation and commissioning manual Part A

EVBox Iqon

Installation and commissioning manual Part A

Contents

1. Introduction 3
    1.1. Scope of the document 3
    1.2. Symbols used in this manual 3
    1.3. Certification and compliance 4
    1.4. Get in touch 6
    1.5. Product classification 6
2. IMPORTANT SAFETY INSTRUCTIONS 8
    2.1. INSTRUCTIONS PERTAINING TO RISK OF FIRE OR ELECTRIC SHOCK 8
    2.2. GENERAL SAFETY INSTRUCTIONS 9
    2.3. MOVING AND STORAGE PRECAUTIONS 10
3. Product features 11
    3.1. Description 11
    3.2. EVBox Iqon models 12
    3.3. Specifications 12
    3.4. Dimensions 14
    3.5. Delivered components 14
    3.6. Optional components 14
4. INSTALLATION INSTRUCTIONS 16
    4.1. Prepare for installation 16
        4.1.1. Plan installation 16
        4.1.2. Choose location 16
        4.1.3. Free space around the charging station 16
        4.1.4. Location options 17
        4.1.5. Hub-Satellite installations 20
        4.1.6. Using Wi-Fi 22
        4.1.7. Route power supply cables 23
    4.2. Unpacking 24
    4.3. Prepare mounting 25
        4.3.1. Prepare ground anchors 26
        4.3.2. Prepare wall mounting 26
        4.3.3. Unimi mounting 26
    4.4. Install charging station 27
        4.4.1. Install the station 27
        4.4.2. Connect power cables 28
        4.4.3. Connect RS485 data cables 29
        4.4.4. Close covers 30

4.5. Commissioning 31
4.5.1. Configuration details 31
4.5.2. Register EVBox Iqon with CMP 31
4.5.3. Download EVBox Connect app 31
4.5.4. Commission EVBox Iqon 31
4.5.5. Commissioning report 32
5. OPERATING INSTRUCTIONS 34
5.1. LED indicator ring 34
5.2. Troubleshooting 35
5.2.1. Error codes 36
5.2.2. Troubleshooting 36
6. MAINTENANCE INSTRUCTIONS 40
6.1. Clean the exterior 40
7. DECOMMISSIONING 41
8. Appendix 42
8.1. Glossary 42
8.2. Disclaimer 42

1. Introduction

Thank you for choosing EVBox Iqon. Built to be accessible and intelligent, EVBox Iqon is the ideal charging station for every commercial location.

This Installation and Commissioning Manual tells you how to install EVBox Iqon and make it ready for use. You must carefully read the safety information before you start.

1.1. Scope of the document

Keep this manual for the entire life cycle of the EVBox Iqon.

This manual is intended exclusively for qualified personnel who can assess the work and identify potential danger.

This manual comprises two parts:

- Manual Part A - This part contains the instructions.
- Manual Part B - This part contains the illustrations for the instructions.

You must read both parts of the manual.

Maintenance and repair instructions are provided in the separate EVBox Iqon Maintenance Manual. All EVBox manuals can be downloaded from www.evbox.com/manuals.

© 2020 EVBox Manufacturing B.V. - all rights reserved. No part of this document may be modified, reproduced, processed, or distributed in any form or by any means, without the prior written permission of EVBox.

www.evbox.com/support

1.2. Symbols used in this manual

The following symbols may be used in this manual:

Symbol	Explanation
	DANGER: Risk of electric shock Indicates an imminently hazardous situation with a high risk level which, if the danger is not avoided, will cause death or serious injury.

Symbol	Explanation
	DANGER: Risk of explosion Indicates an imminently hazardous situation with a high risk level which, if the danger is not avoided, will cause death or serious injury.
	WARNING: Indicates a potentially hazardous situation with moderate risk level which, if the warning is not obeyed, can cause death or serious injury.
	CAUTION: Risk of electrostatic discharge and damage Indicates a potentially hazardous situation with a medium risk level which, if the caution is not obeyed, may cause damage to the equipment.
	CAUTION: Indicates a potentially hazardous situation with a medium risk level which, if the caution is not obeyed, may cause minor or moderate injury or damage to the equipment.
Note:	Notes contain helpful suggestions or references to information not contained in this manual.
B 5.1	This symbol indicates that the illustrations corresponding to the indicated chapter are to be found in Manual Part B.
1., a. or i.	Action to be followed in the stated order.

1.3. Certification and compliance

FCC Communication Regulations

This device complies with Part 15 of the FCC rules. Operation is subject to the following two conditions:

1) This device may not cause harmful interference.

2) This device must accept any interference received, including interference that may cause undesired

operation.

⚠ **WARNING**: Changes or modifications not expressly approved by the party responsible for compliance could void the user's authority to operate this equipment.

Note: This equipment has been tested and found to comply with the limits for a Class B digital device, pursuant to part 15 of the FCC Rules. These limits are designed to provide reasonable protection against harmful interference in a residential installation. This equipment generates, uses, and can radiate radio frequency energy and, if not installed and used in accordance with the instructions, may cause harmful interference to radio communications. However, there is no guarantee that interference will not occur in a particular installation. If this equipment does cause harmful interference to radio or television reception, which can be determined by turning the equipment off and on, the user is encouraged to try to correct the interference by one or more of the following measures:

- Reorient or relocate the receiving antenna.
- Increase the separation between the equipment and receiver.
- Connect the equipment into an outlet on a circuit different from that to which the receiver is connected.
- Consult the dealer or an experienced radio/TV technician for help.

⚠ **WARNING**: This equipment should be installed and operated with a minimum distance of 20 cm (7.8 in) between the radiator and any part of the human body.

US contact information:

1930 Innovation Way,

Suite 200,

Libertyville, IL 60048, USA

www.evbox.com

Canadian Regulatory Statements

This device complies with Industry Canada license-exempt RSS standard(s). Operation is subject to the following two conditions:

(1) this device may not cause interference.

(2) this device must accept any interference, including interference that may cause undesired operation of the device.

Under Industry Canada regulations, this radio transmitter may only operate using an antenna of a type and maximum (or lesser) gain approved for the transmitter by Industry Canada. To reduce potential radio interference to other users, the antenna type and its gain should be so chosen that the equivalent isotopically radiated power (e.i.r.p.) is not more than that necessary for successful communication.

This equipment complies with the ICES RF radiation exposure limits set forth for an uncontrolled

environment. This equipment should be installed and operated with a minimum distance of 20 cm (8 in) between the radiator and any part of the human body.

Note: This device, when operated in the band 5.150–5.250 GHz, is only for indoor use to reduce the potential for harmful interference to co-channel mobile satellite systems.

Americans with Disabilities Act (ADA) Compliance

While single-family residential installations do not have complex parking requirements, commercial, public and multi-unit residential installation have additional parking considerations that include Americans with Disabilities Act (ADA) accessible Electric Vehicle Charging Stations (EVCS) spaces and meeting the minimum requirements for spaces in parking lots and facilities. EVCS site hosts often experience challenges in providing ADA accessible EVCS spaces in addition to standard EVCS spaces while maintaining the minimum requirements for parking. Consideration of the available parking is important for residents as well as employers and employees. Installing charging stations in unassigned spaces or common areas for availability to all residents at MUDs requires compliance with ADA accessibility regulations. Please check with your State and Local government agencies to understand and implement the necessary accommodations for people with disabilities.

Product and environmental characteristics

The charging station has been UL-certified by the manufacturer and bears the UL logo for USA and Canada. The relevant declaration of conformity may be obtained from the manufacturer.

1.4. Get in touch

If you have any suggestions how we can improve our products, or if you see an error, we'd love to hear from you. You can contact us by going to www.evbox.com/support.

All EVBox manuals can be downloaded from www.evbox.com/manuals.

1.5. Product classification

This product has the following classification:

Power supply input	EV supply equipment permanently connected to AC supply network.
Power supply output	AC EV supply equipment.

Normal environmental conditions	Outdoor use.
Access	Equipment for locations with unrestricted access.
Mounting method	Stationary equipment, surface-mounted on ground, or ground and walls.
Protection against electric shock	Class 1 equipment.
Charging modes	Level 2 (US) / Mode 3 (EU).

2. IMPORTANT SAFETY INSTRUCTIONS

WARNING - When using electric products, basic precautions should always be followed, including the following:

Read these instructions before you install this product. SAVE THESE INSTRUCTIONS.

2.1. INSTRUCTIONS PERTAINING TO RISK OF FIRE OR ELECTRIC SHOCK

DANGER

Operating Iqon when it indicates an error state, or when Iqon or the charging cables have cracks, show extensive wear, or have other physical damage, will result in the risk of electric shock, which will cause severe injuries or death.

- Do not operate Iqon if the enclosure or an EV connector is broken, cracked, open, or shows any other indication of damage.
- Do not operate Iqon if a charging cable is frayed, has broken insulation, or shows any other indication of damage.
- In the event of danger and/or an accident, a certified electrician must immediately disconnect the electrical supply from Iqon.
- See Troubleshooting on page 35 for troubleshooting information.
- Contact evbox.com/support if you suspect that Iqon or the charging cables are damaged.

Extensive exposure of Iqon to water or handling Iqon with wet hands will result in the risk of electric shock, which will cause severe injuries or death.

- Do not direct powerful jets of water toward or onto Iqon.
- Never operate Iqon with wet hands.
- Do not put the charging plug into any liquid.

DANGER

Not following the installation instructions given in this manual will result in the risk of electric shock to installers and users, which will cause severe injuries or death.

- Read all the instructions before installing or using this product.
- Switch off input power at the power supply cabinet before you install or service Iqon. Keep the power off until Iqon is fully installed with its covers installed and secured.
- Make sure that connection of electrical power cannot occur during installation. Put up caution tape and warning signs to mark the working areas. Make sure no unauthorized persons enter the working areas.
- If you are unsure about how to use Iqon after reading this manual, contact the CPO for more information.
- Do not allow children to operate Iqon. Adult supervision is required when children are near an Iqon that is in use.

Installation and servicing of Iqon or its components by non-qualified personnel will result in the risk of electric shock and damage to Iqon, which will cause severe injury or death.

- The user must not attempt to service or repair Iqon as it does not contain user-serviceable parts.
- Iqon must only be installed, serviced, repaired or relocated by a qualified electrician.

2.2. GENERAL SAFETY INSTRUCTIONS

WARNING

Improper usage of Iqon may result in damage to Iqon, which may cause injury or death.

- Read and understand this manual before installing or using Iqon.
- If you are unsure about how to install or use Iqon after reading this manual, contact evbox.com/support for more information.
- Do not allow children to operate Iqon. Adult supervision is required when children are near an Iqon that is in use.
- Do not put fingers into the electric vehicle connector.

Using adapters, conversion adapters or cord extensions with Iqon may result in technical incompatibilities and can result in damage to Iqon, and thus cause injuries or death.

- Use this charging station to charge Level 2 (US) / Mode 3 (EU) compatible electric vehicles only.
- Refer to the vehicle user manual to check if the vehicle is compatible.

⚠ WARNING
Exposure of Iqon to heat sources or flammable substances can result in damage to Iqon, and thus cause injuries or death. • Make sure that Iqon or the charging cables never come into direct contact with heat sources. • Do not use explosive or readily flammable substances near Iqon.
Using Iqon under conditions not specified in this manual may result in damage to Iqon, which may cause injury or death. • Only use Iqon under the specified operating conditions, see Specifications on page 12.
To reduce the risk of fire, connect only to a circuit provided with 40 amperes maximum branch circuit overcurrent protection in accordance with the ANSI/NFPA 70 National Electrical Code and/or CSA C22.1 - 15 Canadian Electrical Code, Part 1
This product must be connected to a grounded, metal, permanent wiring system, or an equipment-grounding conductor must be run with the circuit conductors and connected to the equipment grounding terminal on the product
Use 8 AWG, 75°C (167°F) copper wire only.
Service replaceable fuses: • Disconnect power at the power supply cabinet before changing the fuse.

2.3. MOVING AND STORAGE PRECAUTIONS

Obey the following guidelines when moving and storing Iqon:

- An Iqon in its packing weighs 95 kg (210 lbs). Only lift and move a packaged Iqon using suitable lifting apparatus.
- An unpacked Iqon weighs 85 kg (188 lbs). Only lift and move an unpacked Iqon using a lifting sling or cable attached to the lifting eyes on Iqon, and using suitable lifting apparatus, as described in this manual.
- Never lift Iqon using its charging cables, connectors, covers or frame.
- Disconnect input power before removing the charging station for storage or relocation.
- Only transport and store the charging station in its original packaging. No liability can be accepted for damage incurred when the product is transported in non-standard packaging.
- Store the charging station in a dry environment in the temperature and humidity ranges given in the specifications.

3. Product features

The Iqon charging station is compatible with all Level 2 (US) / Mode 3 (EU) electric vehicles and is designed for both indoor and outdoor use. The charging station is connected to a Charging Management Platform (CMP) for the registration of the number of kilowatt-hours (kWh) used per charging session.

3.1. Description

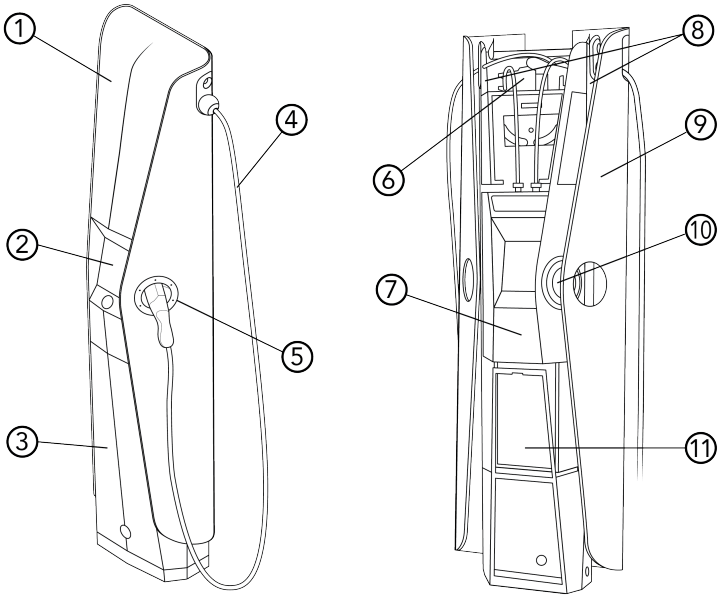

Key:

1. Top cover.
2. Display.
3. Bottom cover.
4. Charging cable.
5. LED ring.
6. Charging cable locking mechanism.
7. Charger box.
8. Lifting eyes.
9. Side panel.
10. Holder.
11. Installer box.

3.2. EVBox Iqon models

Iqon is either a Hub model or a Satellite model.

A Hub model can connect up to 20 connectors (1 Hub and 9 Satellites, each with two connectors) to a CMP. The Hub uses either a pre-programmed SIM to connect to the CMP through a telephone network, or a Wi-Fi connection to a local Wi-Fi router.

A Satellite model does not have a SIM, a Wi-Fi connection, or Bluetooth.

3.3. Specifications

Feature	Description
Electrical properties	
Power line electrical input	2x 7.2 kW (1-phase/split-phase 240 V AC, 30 A per cable).
Electrical output	2x 7.2 kW.
Charging mode	Level 2 (UL2594) / Mode 3 EVSE (IEC 61851).
Fixed charging cable	2x Type 1 (SAE J1172) fixed cables - fully sealed.
Charging cable length	5.5 m (18 ft).
Optional metering	Dual UL-certified kWh meter with California Title 24 compliance for service metering.
System lighting	Day-and-night mode, automatic brightness, automatic and touch system wake-up.
Safety and certification	
Safety	Safety Class I (the charging station is supplied with a ground terminal for safety). Overvoltage Category III.
Ground leakage detection	CCID 20 mA AC per outlet.
Surge protection	6 kV.
Black-out protection	Return to previous status after power loss.
Operating temperature range	-30 °C to +45 °C (-22 °F to +113 °F).

Feature	Description
Operating humidity (non-regulating)	85 % at 45 °C (113 °F) (non-condensing).
Maximum installation altitude	2000 m above sea level.
Enclosure degree of protection	IP54 / IK10 / UL 50E (Type 3R).
Certification	UL 2594, UL 2231-2, UL 1998-3, UL 991, cULus, Energy Star, FCC.
Connectivity	
Authorization	RFID, QR code, and Autostart.
Communication standard	Dual band Wi-Fi 2.4/5 GHz, Bluetooth 4.0 for configuration with the EVBox Connect app, GPS.
Communication protocol to backend	OCPP 1.5 S / 1.6 S / 1.6 J.
Smart Charging using the MAX protocol	RS485.
Charging station configuration	Using EVBox Connect app.
Physical properties	
Plastic materials	UL 94 – 5V / US-FMVSS / ISO 3795 passed, DIN 53438 F1/K1.
Locking holster	Quantity 2.
Display	20 cm (8 in) LCD full color screen (768x1024) with capacitive touch, sunlight readable.
Status indication	2 LED rings, 1 per connector.
Dimensions	See Dimensions on page 14.
Weight (kg)	• 85 kg (188 lbs). • 95 kg (210 lbs) in packaging.
Mounting	Ground mount: free-standing, wall-supported, or back-to-back.

3.4. Dimensions

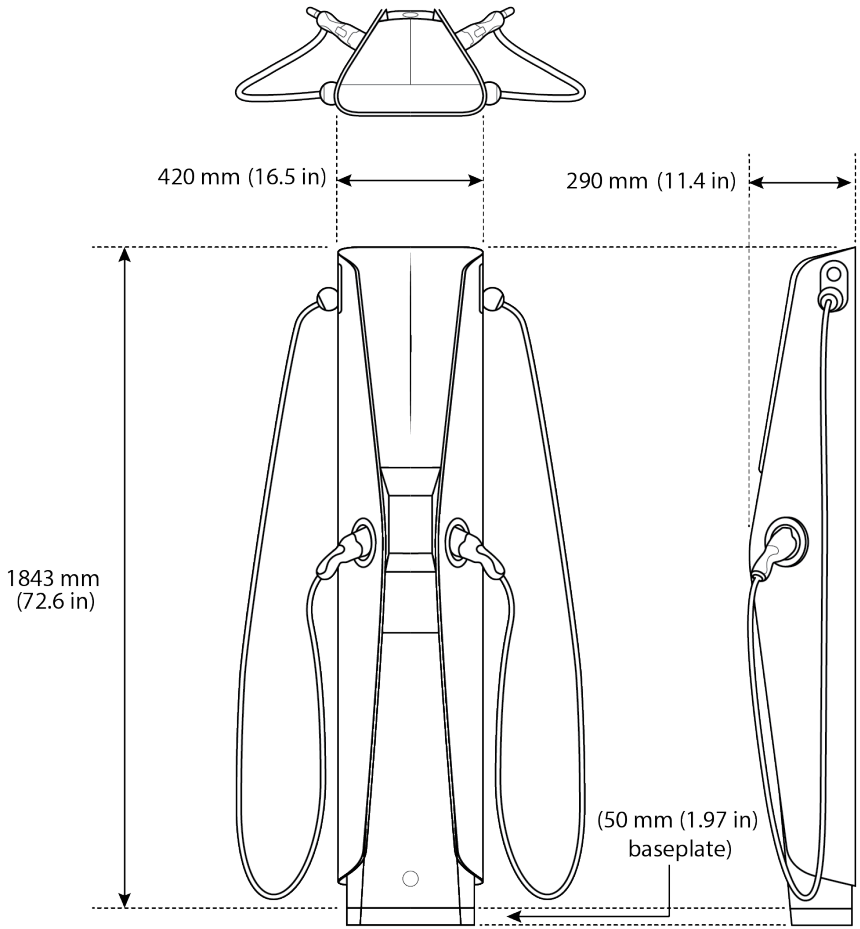

3.5. Delivered components

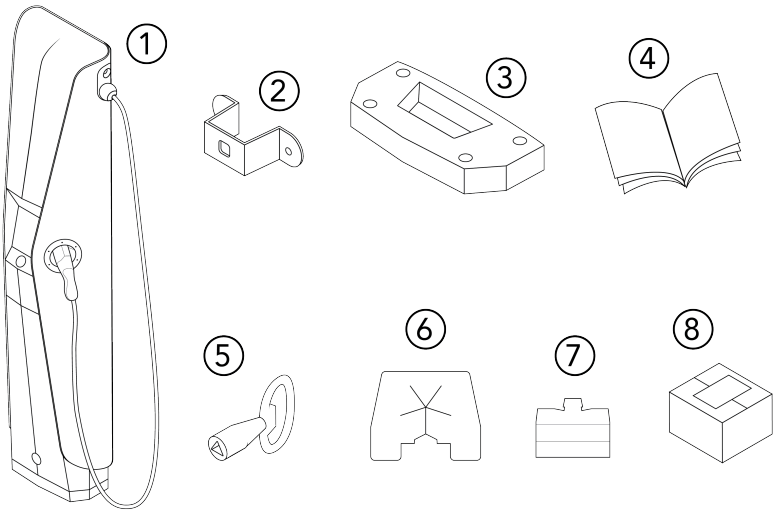

Key:

1. Iqon charging station.

2. Bracket, 2x.

3. Baseplate, 50 mm (1.97 in).

4. Iqon documentation.

5. Key to open covers.

6. Protection shield.

7. Lifting shield.

8. Small components (including optional parts to cover various installation requirements).

3.6. Optional components

Depending on the installation, the following components can also be required. Contact your supplier to order the optional components.

Note: The installer is responsible for supplying the power cables, data cables and any minor items required for the installation.

Component	Part number
EVBox Dual Socket Test Box (to test the functioning of the charging station)	462323

4. INSTALLATION INSTRUCTIONS

4.1. Prepare for installation

The following recommendations are a guide to help you prepare for the installation of the EVBox Iqon charging station.

⚠ WARNING

Improper installation of Iqon may result in damage, which may cause injury or death. You must read and obey the safety precautions at the beginning of this manual before you install, service or use your EVBox charging station. The installer must ensure that the charging station is installed in accordance with the relevant country-specific standards and local regulations.

4.1.1. Plan installation

- Calculate the existing electrical load to find the maximum operating current for the charging station installation.
- Calculate the distance from the power supply cabinet to the charging station installation to determine the voltage drop. Local regulations may be applicable and can vary depending upon the region or country.
- Obtain all necessary permits from the local authority that has jurisdiction.
- Use 8 AWG, 75°C (167°F) copper wire only.
- Refer to local wiring regulations to select the conductor sizes.
- Make sure that there is the specified free space around the charging station for ventilation purposes.
- Use the correct tools and provide sufficient material resources and protection measures.
- Make sure that there is good cellular reception on the applicable frequency bands (see specification sheet for more details) and/or good Wi-Fi reception where the Hub charging station will be installed.
- Prepare the installation areas with the correct power wiring for each charging station and the network cabling between the Satellite charging stations and the Hub charging station.

4.1.2. Choose location

Position the charging station, where possible, in surroundings where it is not exposed to extreme heat and sunlight. Where necessary, protect the charging station with barriers to prevent damage by vehicle collision.

4.1.3. Free space around the charging station

There must be a minimum free space around the charging station.

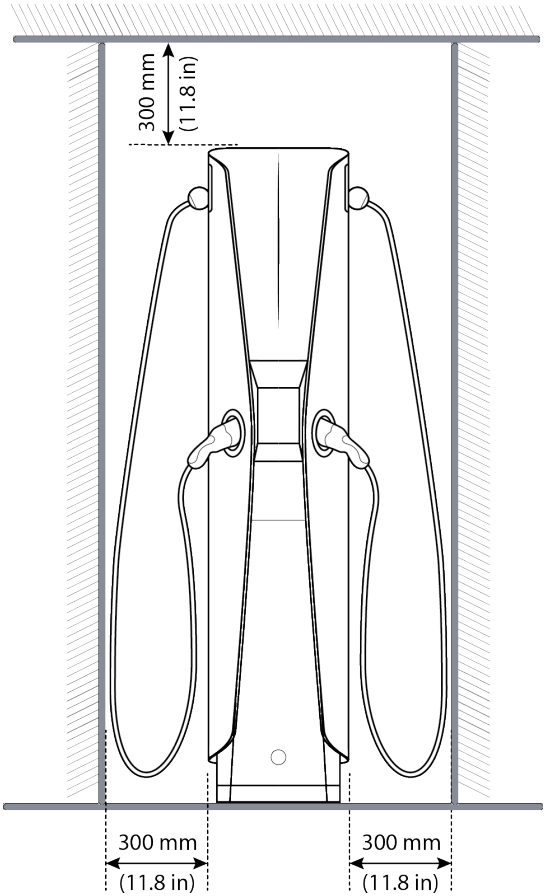

4.1.4. Location options

The charging station can be installed in various positions.

Note: The position and installation height of the charging station must comply with the Americans with Disabilities Act (ADA) regulations. To increase the installation height, use the 50 mm (1.97 in) baseplate provided.

Free-standing installation

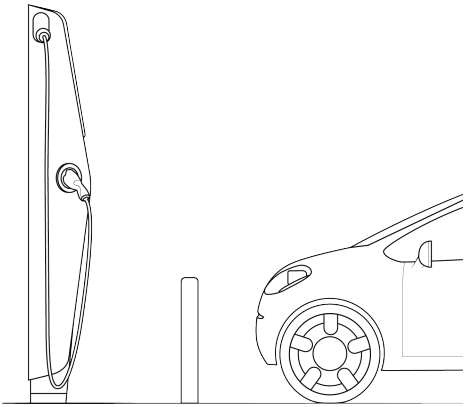

Wall-supported installation

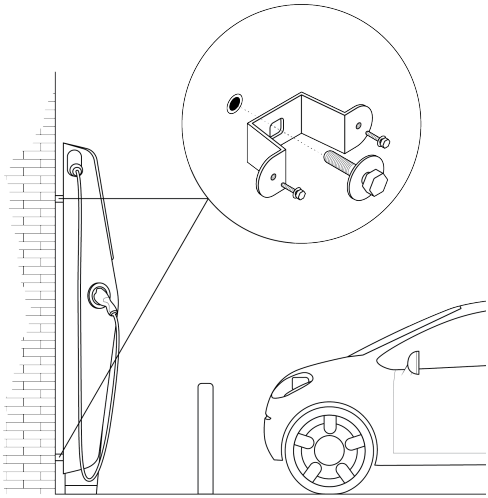

Back-to-back installation

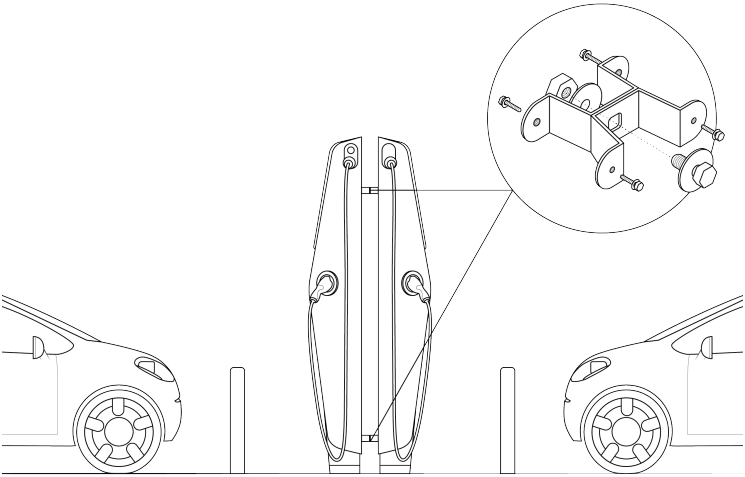

Example dual-bay location

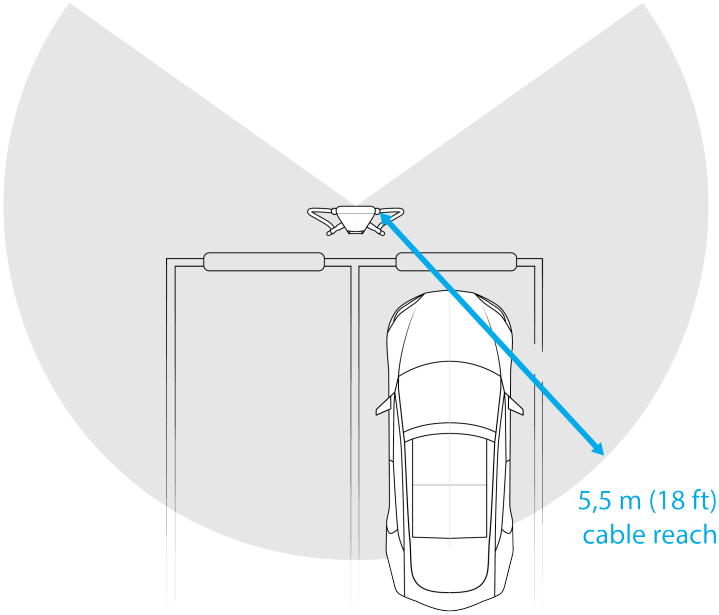

4.1.5. Hub-Satellite installations

A Hub-Satellite charging station installation can consist of up to 9 Iqon Satellite stations connected to the Iqon Hub station. In any installation there must be one Hub station, and all Satellite stations connect to that Hub station. A Hub-Satellite installation uses two separate RS485 serial data connections for the following data communication:

- Smart Charging using the MAX protocol - from the external power supply cabinet to the Hub. Smart Charging optimizes power usage.
- Hub-Satellite - from the Hub in series to each Satellite. The Hub uses either a pre-programmed SIM to connect through a cellular telephone network, or a Wi-Fi connection to a local Wi-Fi router.

RS485 serial connection

When RS485 serial data connections are required, install the RS485 cables when the area is being prepared. Note the following guidelines:

- For correct operation of a smart grid, a Hub-Satellite configuration must be connected from a single power supply cabinet. If a group of charging stations is powered from a different power supply cabinet then that group of stations must be a separate Hub-Satellite configuration.
- Use SFTP Category 6 network cable.
- Use the green/green-white twisted pair of wires for the RS485 Hub-Satellite connections.
- Use the blue/blue-white twisted pair of wires for the RS485 smart charging connections.
- Terminate the RS485 Hub-Satellite loop at the last Satellite with the 120 Ω resistor (supplied with the Iqon small components). The 120 Ω resistor is not required when only a Hub is installed.
- In a Hub-Satellite installation, if one or more LED rings constantly flash red then there is an incorrect connection in one of the satellite RS485 connections.

For connection of the RS485 network cable to Iqon, see Connect RS485 data cables on page 29.

Example of a RS485 serial data connection

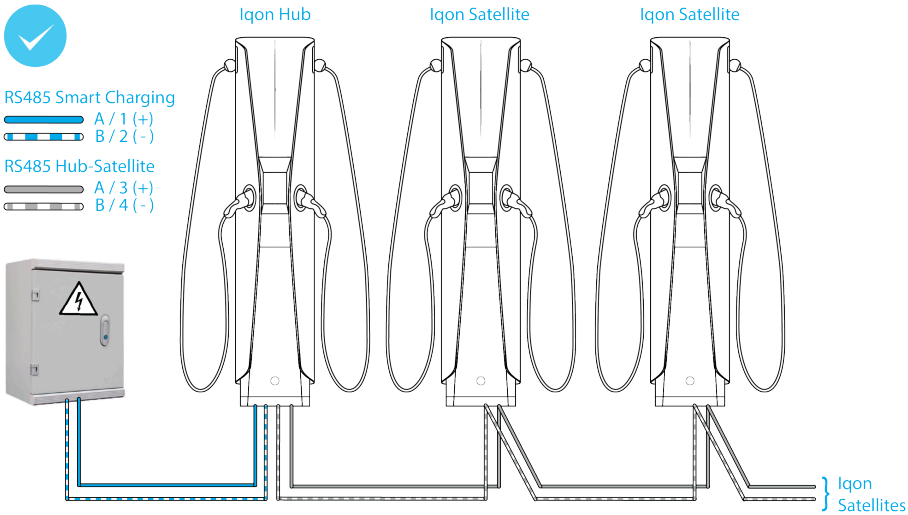

Incorrect RS485 configurations

RS485 data communication configurations in a Star-shaped or T-shaped network will not function correctly because signal reflections can occur in the network:

Star-shaped network

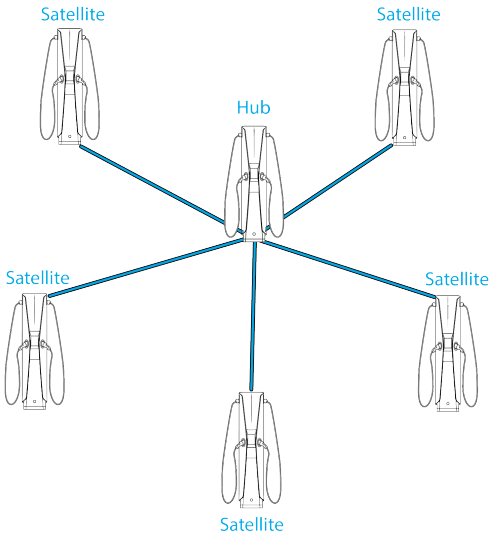

T-shaped network

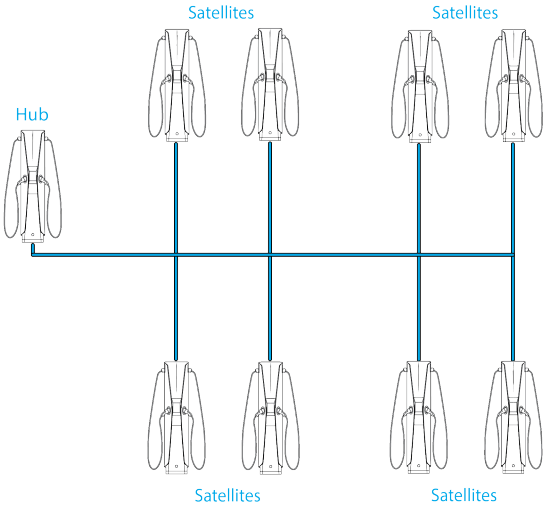

4.1.6. Using Wi-Fi

Iqon is equipped with a multi-radio module. The wireless module includes dual-mode Bluetooth v4.0 (BR/EDR and low energy) and dual-band Wi-Fi (2.4 and 5 GHz bands). For Wi-Fi connectivity, the device supports Wi-Fi IEEE 802.11 (a/b/g/n).

⚠ **CAUTION:** For Canada: Wi-Fi using the 5 GHz band is not permitted outdoors.

Notes on Wi-Fi security:

- Wi-Fi Protected Access 2 (WPA2), also known as WPA-Personal or 802.11i, is the most common security setting for Wi-Fi networks. WPA2 has replaced WPA.
- It is not possible to have WPA with AES/CCMP (Advanced Encryption Standard/Counter and CBC-MAC Protocol) encryption or WPA2 with TKIP (Temporal Key Integrity Protocol).
- WEP (Wired Equivalent Privacy) and TKIP are not supported as they are considered unsecure. WEP is now deprecated in the 802.11i specification. Open networks are supported (i.e. networks with no password). However, it is not advised to use open networks for connecting Iqon.
- Enterprise security is the common name for all methods that use 802.1X to authenticate with a backend RADIUS server. Enterprise security is not supported by Iqon.

Some tips when configuring your Wi-Fi router and access point:

- Do not set the option to hide your network because a hidden network will not broadcast to Iqon.
- Make sure that your router is not limiting connections to certain MAC addresses.
- Set the Wi-Fi security to WPA/WPA2, also known as WPA Mixed Mode. This mode allows Iqon to connect with WPA TKIP-level encryption, and lets other devices use WPA2 Personal (AES) encryption.

- Make sure you set a strong Wi-Fi password. A minimum of eight characters are required in a password.
- Make sure that the a/b/g/n modes under the 2.4 GHz and 5 GHz frequencies are active. Iqon will choose the fastest available mode for its operation. 5 GHz is faster, but has a shorter range. 2.4 GHz is better suited for a longer range. The installer must examine the signal strength of both networks during Wi-Fi setup on Iqon.

4.1.7. Route power supply cables

The appropriate wire gage of the supply cable depends on the power rating and distance between the power supply cabinet and the charging station. The voltage drop must not exceed 5% (it is advisable to have a maximum allowable voltage drop of 3%). The maximum wire gage that can be fitted is 16 mm^2 (AWG 6).

Route the power supply cables to the position where the charging station will be installed. Make sure of the following:

- There must be enough cable for it to extend at least 500 mm (20 in) above the cable connection point of the charging station.
- The bend radius must not be exceeded.

The cable can enter from below, from the sides and from the back.

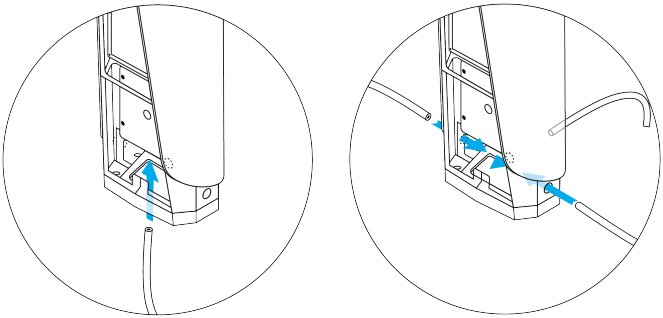

The maximum power rating for each input connection is specified below.

Power per connection	Connection	Input current	Output current
7.2 kW	240 V Split phase per connector	2 x 30 A	2 x 30 A

4.2. Unpacking

B 4.2 See the corresponding illustrations in manual B.

Unpack Iqon in the following way to prevent personal injury or damage to equipment.

1. Move the charging station packaging to the installation area and place it flat on the ground.

   WARNING: The complete packaging with charging station weighs 95 kg (210 lbs). Use only suitable lifting equipment to move the packaging.

2. Carefully cut the sealing tape on the packaging.

3. Remove the components box from the packaging.

4. Unpack the components box and check the components.

5. Lift out the charging cables and put them on the ground next to the box.

   Note: Place protective sheeting on the ground to protect the cables from damage by abrasion.

6. Remove the charging cable packaging.

7. Carefully cut the four corners of the packaging.

8. Open the packaging and remove the filler material.

9. Use the key to open the bottom cover of the charging station.

   Put the cover front side up in a place where it cannot be damaged.

10. Use the key to open the top cover of the charging station.

    Put the cover front side up in a place where it cannot be damaged.

11. Install the lifting protector.

    Note: The lifting protector protects your hands from metal edges during installation.

12. With two persons, lift the charging station to the standing position.

⚠ **WARNING:** Do not leave the charging station standing unsecured. Secure the charging station to a support to make sure that it cannot fall.

⚠ **WARNING:** Do not use the charging cables to lift or move the charging station. The cables can become damaged which will result in the risk of electric shock and damage to Iqon, which will cause injury and death.

13. Retract the charging cables as follows:

a. Remove the safety pin screw.
b. Remove the safety pin.
c. Place the safety pin in its holder.
d. Install the safety pin screw.
e. Remove the protective caps from the charging cables, then dock the charging cables in their holders.
f. Retract the charging cables by pushing down the levers in the cable locking mechanism.

14. Open the side covers as follows:

a. Loosen the four slide Torx screws.
b. Remove the eight thumbnuts.
c. Carefully slide open each side panel.

15. Move the charging station to the installation area as follows:

⚠ **WARNING:** The charging station weighs 85 kg (188 lbs). Use only suitable lifting equipment to move the charging station.

⚠ **CAUTION:** Use only the lifting eyes to lift Iqon or damage can occur. Never use the charging cables to lift or move Iqon.

a. Secure the lifting cable to the lifting eyes.
b. Use the lifting equipment to move the charging station.

   ⚠ **CAUTION:** Protect the charging cables from damage when you move the charging station.

The charging station is now ready to install.

4.3. Prepare mounting

Iqon has the following mounting options:

- On ground anchors set in a stable base.
- On a Unimi ground base with Iqon adapter.

4.3.1. Prepare ground anchors

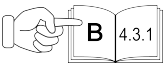

See the corresponding illustrations in manual B.

Install Iqon directly on a raised walkway or sidewalk, or on the same level as the car parking space.

Use the 50 mm (1.97 in) baseplate when Iqon will be installed on the same level as the car parking space. This baseplate raises the height of the charging station to comply with Americans with Disabilities Act (ADA) regulation.

1. Determine the positions of the ground anchors.
   - For mounting against a wall: Clearance from wall = 50 mm (1.97 in).
   - For mounting back-to-back: Clearance between two stations = 100 mm (3.94 in).
2. Mark the location of four attachment points.

   Note: Use the 50 mm baseplate as a template.
3. Drill holes for the M12 ground anchors.

   Note: Follow the manufacturer's instructions for the size and depth of the holes for the ground anchors.
4. Install four M12 ground anchors.

4.3.2. Prepare wall mounting

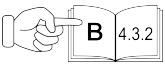

See the corresponding illustrations in manual B.

As an option, a single Iqon can also be secured to a wall using two wall brackets. The Iqon must always be secured to the ground (see Prepare ground anchors on page 26).

1. Mark a center line vertically up the wall from the center of the baseplate.

2. Mark the position of the two wall brackets on the vertical line.

3. Drill two holes.

4. Insert a wall plug in each hole.

5. Secure the wall brackets with two washers and two bolts.

4.3.3. Unimi mounting

A Unimi mounting is a charging station mounting base that is pre-installed in the ground. The base has an adapter that is specific for Iqon. No additional preparation is necessary.

Refer to the Unimi Installation Manual for all details of the Unimi mounting.

4.4. Install charging station

When the installation area is prepared you can then install and connect the charging station.

⚠ WARNING

Improper installation of Iqon may result in damage, which may cause injury or death. You must read and obey the safety precautions at the beginning of this manual before you install, service or use your EVBox charging station. The installer must ensure that the charging station is installed in accordance with the relevant country-specific standards and local regulations.

⚠ WARNING

Make sure that connection of the electrical current cannot occur during installation. Put up caution tape and warning signs to mark the working areas. Make sure no unauthorized persons enter the working areas.

4.4.1. Install the station

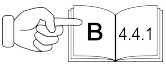

See the corresponding illustrations in manual B

1. When required, install the 50 mm baseplate on the ground anchors.

2. Use the lifting equipment to lift the charging station onto the ground anchors.

   ⚠ **WARNING:** The charging station weighs 85 kg (188 lbs). Use only suitable lifting equipment to move the charging station.

3. Install four washers and four nuts to secure the charging station.

4. Install the protection shield.

   Note: The protection shield prevents small parts falling in to the cable duct.

5. For a wall-mounted Iqon, secure Iqon to the two wall brackets using four bolts.

6. For two Iqon stations installed back-to-back, secure the Iqon stations together as follows:

   a. Assemble four brackets into two bracket assemblies.
   b. Secure the Iqon stations together using the two bracket assemblies and eight bolts.

Iqon is ready for cable connection.

4.4.2. Connect power cables

B 4.4.2 See the corresponding illustrations in manual B.

Note: Use 8 AWG, 75°C (167°F) copper wire only.

1. Remove four Torx screws and the frame from the installer box.

2. Loosen the six Phillips screws then remove the installer box cover.

3. Route each power cable into the charging station through the chosen entry point.

   Note: Use a conduit gland on a power cable that enters from the side or back.

4. Route each power cable to its conduit fitting in the installer box using the available cable entries from below, the sides, or the back.

   ⚠ **CAUTION:** Do not exceed the maximum bend radius for the type of cable used.

5. Cut and strip the power cables to the required length.

6. Strip the power wire ends.
   With stranded (flexible) wiring, use wire end sleeves with a ferrule length of 12-15 mm (0.47-0.60 in) and apply a square crimp for optimal fit into the terminal blocks.

   Note: Only use UL approved cable sleeves that are suitable for the wire size.

7. Feed the power cables through the conduit fittings into the installer box.

8. Connect the power wires to the terminal blocks and torque the screws.
   GROUNDING INSTRUCTIONS: This product must be connected to a grounded, metal, permanent wiring system, or an equipment-grounding conductor must be run with the circuit conductors and connected to the equipment grounding terminal or lead on the product.

The power cables are connected.

4.4.3. Connect RS485 data cables

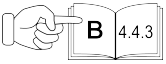

See the corresponding illustrations in manual B.

Iqon uses two separate RS485 serial data connections for the following data communication:

- Smart Charging using the MAX protocol - from the external power cabinet to the Hub.
- Hub-Satellite - from the Hub in series to each Satellite.

Refer to Hub-Satellite installations on page 20 for more information about the RS485 serial data connections.

1. Route each network cable into the charging station through the chosen entry point.

   Note: Use SFTP Category 6 network cable for the RS485 connection.

2. Cut and strip each network cable to the required length.

   - Use the green/green-white twisted pair of wires for the RS485 Hub-Satellite connections.
   - Use the blue/blue-white twisted pair of wires for the RS485 smart charging connections.

3. Strip the network cable wire ends.
   Install wire end sleeves with a ferrule length of 12-15 mm (0.47-0.60 in) and apply a square crimp for optimal fit into the terminal blocks.

   Note: Only use UL approved cable sleeves that are suitable for the wire size.

4. Feed each network cable through the small cable glands into the installer box.

5. Push the ferrules on the network cable wires fully into the terminal blocks.

6. Terminate the RS485 Hub-Satellite loop at the last Satellite station in the loop with the 120 Ω resistor (supplied with the small components).

Note: The 120 Ω resistor is not required when only a Hub is installed.

7. Pull on each wire to make sure it is correctly connected.
The indicators on the terminal blocks must be in the locked position.

The network cables are connected.

4.4.4. Close covers

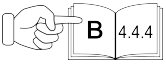

See the corresponding illustrations in manual B.

1. Install the installer box cover then tighten the six screws.

2. Install the installer box frame using four Torx screws.

3. Make sure the work area is clean, then remove the protection shield.

4. Close the side covers as follows:

a. Slide the side panels closed.
b. Install and tighten the eight thumbnuts.
c. Tighten the four Torx screws.

5. Install the bottom cover.

6. Install the top cover.

Iqon is ready for commissioning.

⚠ **CAUTION :** Do not switch on power to Iqon at this time. You must first register Iqon with the CMP before power is switched on.

4.5. Commissioning

Commissioning Iqon connects it to a CMP, ready to charge a vehicle. In a Hub-Satellite installation, only the Hub Iqon is connected to the CMP, with the Satellites connected through this Hub using RS485 data communication.

A Hub model can connect up to 20 connectors (1 Hub and 9 Satellites, each with two connectors) to a CMP. The Hub uses either a pre-programmed SIM to connect to the CMP through a telephone network, or a Wi-Fi connection to a local Wi-Fi router.

Note: It is important that Iqon is first registered with the CMP before power is supplied. This allows Iqon to find and connect to the CMP URL automatically.

4.5.1. Configuration details

The Iqon configuration details are on the sticker in Part B of this manual. Configuration details can also be found on the packaging. You will need the configuration details of a Hub Iqon to commission a standalone Hub or a Hub-Satellite installation.

4.5.2. Register EVBox Iqon with CMP

Register the Hub Iqon with the CMP on the CMP website or using the CMP-specific app. Contact the CPO for details about the charging station registration procedure.

4.5.3. Download EVBox Connect app

Use the EVBox Connect app to set up the Hub Iqon and connect it to the CMP.

Download and install the EVBox Connect app on your smartphone or tablet:

Download on the App Store

GET IT ON Google Play

4.5.4. Commission EVBox Iqon

Make sure that Iqon is registered with the CMP before you connect power (see Register EVBox Iqon with CMP on page 31).

1. Switch on electrical power to Iqon.
   Iqon powers up and runs the start-up sequence.
   Bluetooth is activated and Iqon searches for the device that is running the EVBox Connect app.

2. Open the EVBox Connect app on your smartphone or tablet.

3. Select **START PAIRING** in the app.
   A list of charging stations is shown.

4. Select the Iqon Bluetooth ID.
   The LED ring shows flashing purple when pairing using Bluetooth is active.

5. Select the Iqon Bluetooth ID and follow the instructions in the app. The following details from the Iqon configuration sticker (see Configuration details on page 31) are required for the app:

   - The product Bluetooth ID.
   - The product security code.

6. Use the app in the Installer mode to configure the following settings:

   a. For a charging installation connected using the pre-programmed SIM:
      - The applicable Charging Management Platform (CMP). (Do not change the CMP URL.)
      - The charge current.
   b. For a charging installation connected to Wi-Fi:
      - The Wi-Fi connection.
      - The applicable Charging Management Platform (CMP). (Do not change the CMP URL.)
      - The charge current.
   c. The following settings can be also be configured using the app:
      - Charger Access Control. Select the required access control for the charging station (Autostart or card/key-fob).
      - LED Ring brightness.
      - LED Ring ON or OFF when Iqon is in idle mode.
      - Charging station name.
      - Adding and removing charge cards.
      - Updating the firmware.

7. Follow the instruction in the app to reboot Iqon.

Iqon is connected to a CMP and is ready to use.

4.5.5. Commissioning report

Complete the Commissioning Report that is supplied with Iqon. For a Hub-Satellite installation, complete only one report. Send a copy of the report to the CPO. The installer should keep the original of the report.

5. OPERATING INSTRUCTIONS

5.1. LED indicator ring

LED ring color	What it means	What to do
LED ring off or green.	Iqon is ready for use.	• Activate the Iqon touchscreen. • Select the payment method (for example, CPO card, or QR code). • Select the charging cable to use.
LED ring flashing green.	Payment method is being authorized.	Wait until the LED ring turns blue.
LED ring blue.	Iqon is charging the vehicle.	• Extend the selected charging cable and plug it into the vehicle. • Charging can be stopped at any time. • Wait until the vehicle has charged.
LED ring yellow.	The car is fully charged.	• Stop the charging session using the payment method used for activation (for example, CPO card, or QR code). • Unplug the charging cable from the vehicle. • Retract the charging cable and place the plug into the holder.

LED ring color	What it means	What to do
LED ring flashing yellow.	Charging session is in queue (applicable for Smart Charging only).	When power becomes available, charging will start or resume and the LED ring will turn blue.
LED ring red.	An error has occurred.	• Place the plug correctly back into the holder on Iqon. • Check Troubleshooting on page 35 for a solution. If you cannot solve the issue, contact your EVBox installer or supplier.
LED ring flashing red.	Selected payment method is not authorized.	• Check the error shown on the touchscreen. • Check if the charging station is connected to a CMP. • Whitelist the user. • Contact the charge card service operator.
LED ring flashing purple.	Iqon is in Bluetooth pairing mode and ready to pair with the EVBox app.	See Commission EVBox Iqon on page 31.

Note: When the charging station is installed, the LED indicator ring can be tested using the EVBox Test Box.

5.2. Troubleshooting

⚠ DANGER: Risk of electric shock

Handling of electric devices, especially if broken, will result in the risk of electric shock, and thus can

cause severe injury or death.

- Troubleshooting must only be done by a qualified electrician unless otherwise stated.

5.2.1. Error codes

Error codes and error descriptions on the touchscreen indicate errors that have occurred.

Error code	Description	Action
E1	Card not recognised	Try card again, or use another payment method.
E2	Charger in use	Try card again, or use another payment method. Wait for charger to become available.
E3	Check plug	Make sure charging cable plug is correctly placed in the Iqon plug holder. Make sure that the plug is in a serviceable condition.
E4	Connection failed	Charging cable cannot communicate with vehicle.
E5	System offline / Broken / Error	Selected Iqon charging cable is not working. The reason for error is shown on the screen.
E6	System not available	The selected Iqon charging cable is not available.

5.2.2. Troubleshooting

Troubleshooting must only be done by a qualified electrician unless otherwise stated. Incorrect installation, repairs or modification can result in danger to the user and may void the warranty and liability.

This is a general troubleshooting guide listing the most common issues. If you are not able to solve an issue, visit www.evbox.com/support for further help from our service pages and support team.

Problem	Possible cause	Solution
Charging station does not react.	No power to charging station.	• Check that the residual-current device and circuit breaker on the main power supply panel are on. • Switch off the main power supply, wait 20 seconds, then switch on the main power supply again. • Check that the power supply cable connected to the charging station is live. The LED ring should show green.
Charging station does not emit clear tone when main power supply is switched on.	Power supply wiring is not connected correctly to the installer box.	• Check for correct voltage on the input terminals of the installer box. • Ensure all wire and plug connections are secure, especially on the installer box.
LED ring flashes red immediately when the card is held against the reader. Error code E1 is shown on the touchscreen.	Charge card is not authorized for charging at this charging station.	Check that the charge card is authorized for use on public chargers. (Check by card holder.)
	There is no communication with the CMP.	Use the EVBox Connect App to check that the Hub station has a connection to the cellular or Wi-Fi network.
LED ring shows constantly red.	Grounding fault.	• Check that the electrical installation is correctly grounded. • If necessary, add additional grounding closer to the installation.

Problem	Possible cause	Solution
In a Hub-Satellite installation, one or more LED rings constantly flash red.	Crossed connection in one of the satellite RS485 connections.	Examine RS485 wiring and connections.
	No connection with the Hub charging station.	Check the RS485 wiring and connections between all charging stations in the group.
LED ring always shows yellow.	Vehicle is fully charged.	Disconnect the charging cable.
	Charging station is waiting for vehicle.	Check that the charging cable plug is inserted into the vehicle correctly. (Check by user.)
	Vehicle is on a timer.	Change the setting of the timer in the vehicle. (Done by user.)
	The charging cable has a fault.	Replace the charging cable.
	Ground resistance is too high for the vehicle type.	Measure the ground resistance and compare it to the resistance required by the supplier of the vehicle.
LED ring shows blue for a few seconds, then changes to yellow.	Vehicle will not charge.	• Make sure that the minimum current accepted by the car is not higher than the minimum current supplied by the station. (Check by user.) • Check that the electrical installation is correctly grounded.
Charging station does not start charging. LED ring flashes green for 30 seconds, then flashes red 10 times. LED ring changes to green or goes off	No response from the CMP portal account.	Use the card again to start the charging. If the problem remains, contact the CPO for further support.

Problem	Possible cause	Solution
	Plug not locked.	• Make sure that the charging plug is pushed far enough into the vehicle socket station. • Examine the charging plug and vehicle socket for damage or bent pins. • Examine the charging plug and vehicle socket to see if it is blocked by an object.
Plug cannot be removed from vehicle.	Incorrect card used to stop charging (LED ring flashes purple briefly).	Use the same card to stop charging as to start charging. (Check by user.)
	No response from the CMP portal account.	Use the card again to stop the charging. If the problem remains, contact the CPO for further support. (Check by user.)
	Plug lock will not release.	• Push the plug further into the charging station and hold the card against the card reader again. (Check by user.) • Switch off the main power supply, wait 20 seconds, then switch on the main power supply again.

6. MAINTENANCE INSTRUCTIONS

Clean Iqon when necessary, and regularly inspect the exterior for damage.

The owner of Iqon is responsible for the condition of the charging station, whereby both the law regarding the safety of persons, animals, and property must be observed, as well as the installation regulations in force in the country of use. Have Iqon and its installation inspected by an electrician on a regular basis and in compliance with installation regulations applicable in your country.

⚠ **CAUTION:** The user must not attempt to service or repair Iqon as it does not contain user-serviceable parts.

⚠ **CAUTION:** Do not use a hose or a high pressure spray to clean Iqon.

⚠ **CAUTION:** Do not use aggressive chemical cleaners or solvents to clean Iqon.

6.1. Clean the exterior

Clean the exterior of Iqon when necessary. For intensive-use locations, clean the touchscreen weekly.

1. Clean the outer surfaces and covers using a soft damp cloth and mild detergent.

2. Wipe any moisture off using a soft dry cloth.

3. Clean the touchscreen using cleaning wipes specifically intended for use on touchscreens.

7. DECOMMISSIONING

Remove and dispose of the charging station in accordance with applicable local disposal regulations.

DANGER: Risk of electric shock

Before the charging station is removed, switch off all power at the power supply cabinet. Secure the power supply cabinet and put up warning signs to prevent accidental supply of power.

Removal is the reverse of the installation procedure (see Install charging station on page 27).

Dispose of the charging station in a responsible manner.

	Do not dispose this charging station in household waste. Instead, dispose this charging station at a local collection point for electric/electronic devices in order to enable recycling and thus avoiding negative and hazardous impacts on the environment. Ask your city or local authorities for respective addresses.
	Recycling of materials saves raw materials and energy and makes a major contribution to conserving the environment.

8. Appendix

8.1. Glossary

Abbreviations and acronyms	Meaning
AC	Alternating Current.
ADA	Americans with Disabilities Act.
CMP	Charging Management Platform. The backend platform that links a charging station to the CPO.
CPO	Charging Point Operator. The owner and/or operator of the the charging station installation.
EV	Electric Vehicle.
EVCS	Electric Vehicle Charging Station.
HMI	Human Machine Interface.
LED	Light Emitting Diode.
MUD	Multi-User Dwelling.
OCPP	Open Charge Point Protocol.

8.2. Disclaimer

The present document is drawn up by way of information only and does not constitute an offer binding upon EV-Box ("EVBox"). EVBox has compiled the contents of this document to the best of its knowledge. No express or implied warranty is given for the completeness, accuracy, reliability or fitness for particular purpose of its content and the products and services presented therein. Specifications and performance data contain average values within existing specification tolerances and are subject to change without prior notice. Prior to ordering, always contact EVBox for the latest information and specification. EVBox explicitly rejects any liability for any direct or indirect damage, in the broadest sense, arising from or related to the use and/or interpretation of this document. EVBIM_062020 © EV-Box North America Inc.

EVBox strives to manufacture products of the highest quality. EVBox products for the US market are UL 2594 tested and compliant. For the Canadian market, they are CSA C22.2 No. 280-16 tested and compliant. For the EU market, they are CE certified and compliant with the essential requirements of EMC Directive 2014/30/EU and Low Voltage Directive 2014/35/EU. More details can be found at evbox.us or in this installation manual. EVBox products are sold with a limited warranty described at evbox.us/general-terms-conditions.

© 2020 EVBox North America, Inc. All rights reserved. Iqon, EVBox® and the EVBox logo are trademarks or registered trademarks.

EVBox North America Inc.,

1930 Innovation Way,

Suite 200,

Libertyville, IL 60048, USA

evbox.com/support

EVBOX

EVBIM_062020 © EVBox Manufacturing B.V.