LUNA LAMP

USER MANUAL

English – Original user manual

Version 1.0 issued on 03-03-23

TRIBÙ
The art of leisure

CONTENT

Introduction **4**

The story of Luna **4**

Safety instructions **5**
Intended use 5

Disclaimer **6**

Recycling **6**

Compliance **7**
Simplified EU declaration of conformity 7
FCC 7
RSS of Industry 8

Product overview **9**
Parts list 9
Specifications 10
Adapter specifications 10

Installation **11**
Check the contents of the package 11
Assembling the lamp 11
Charging the lamp 12
Operating the lamp with the button 13
Installing the app 13
Connecting with the lamp 14

Use **16**
Controlling the lamp 16
Create a group 20
Programming 22
Sharing 24

Maintenance **26**
Replacing the LED light 26
Cleaning the lamp 28

Troubleshooting **29**

INTRODUCTION

Congratulations on the purchase of your Luna lamp.

This user manual contains all the necessary information for the correct, efficient and safe use of your lamp. We encourage you to read this information carefully before installing or using the product.

We recommend to store this user manual in a safe place with the product for future reference.

THE STORY OF LUNA

A party with friends gave the founding partners of international design agency Yabu Pushelberg the idea to create Luna, a collection of wireless mood lanterns that connect people with nature.

Versatile contemporary design, uniting people with their environment, smart inaugural lighting, multi-purpose design. The Luna portable lanterns excel at what they were designed for: connecting people with their surroundings.

SAFETY INSTRUCTIONS

- ⚠ Only use the product as described in this manual.
- ⚠ Do not use a damaged product.
- ⚠ Do not use the product if a part is damaged or defective. Replace a damaged or defective part immediately.
- ⚠ Do not drop the product and avoid bumping.
- ⚠ Do not immerse the product in water.
- ⚠ Always switch off the lamp before installation or maintenance work.
- ⚠ Only charge the lamp with an USB-C cable. Any other USB types may damage the lamp.
- ⚠ Do not charge the lamp outdoors. Only charge the lamp indoors.
- ⚠ Any changes made to the product can have consequences for safety, correct operation and warranty procedures.

INTENDED USE

The product is only intended as indoor or outdoor LED lighting. Any change to the product can have consequences for safety, warranty and correct operation.

DISCLAIMER

Designs and specifications are subject to change without notice. All logos, brands and product names are trademarks or registered trademarks of their respective owners and are hereby recognised as such.

RECYCLING

Our products are packaged in environmentally friendly materials that can be recycled, disposed of or destroyed without endangering the environment.

This symbol indicates that a product should not be thrown away with other household waste throughout the EU to prevent possible harm to the environment or human health by uncontrolled waste disposal. You are responsible for recycling in order to promote the sustainable reuse of raw materials.

COMPLIANCE

Luna complies with Low Voltage, EMC, Ecodesign and RoHS directives.

SIMPLIFIED EU DECLARATION OF CONFORMITY

Hereby, Tribù NV declares that the radio equipment type lamp is in compliance with Directive 2014/53/EU. The full text of the EU declaration of conformity is available at the following internet address: **www.tribu.com/en/collections/luna/lamp/**

FCC

This device complies with part 15 of the FCC Rules. Operation is subject to the following two conditions: (1) this device must not cause harmful interference, and (2) the user must accept any interference received, including interference that may cause undesired operation. Any changes or modifications not expressly approved by the party responsible for compliance could void the user's authority to operate the equipment.
NOTE: This equipment has been tested and found to comply with the limits for a Class B digital device, pursuant to Part 15 of the FCC Rules. These limits are designed to provide reasonable protection against harmful interference in a residential installation. This equipment generates, uses and can radiate radio frequency energy and, if not installed and used in accordance with the instructions, may cause harmful interference to radio communications. However, there is no guarantee that interference will not occur in a particular installation.

If this equipment does cause interference to radio or television reception, which can be determined by turning the equipment off and on, the user is encouraged to try to correct the interference by one or more of the following measures:
- Reorient or relocate the receiving antenna.
- Increase the separation between the equipment and receiver.
- Connect the equipment to an outlet on a different circuit from the receiver.
- Consult the dealer or an experienced radio/TV technician for help.

To maintain compliance with the FCC's RF Exposure guidelines, This equipment should be installed and operated with minimum distance of 20cm between the source of interference (in this case Bluetooth) and your body.

RSS OF INDUSTRY

This device complies with Industry Canada's licence-exempt RSS. Operation is subject to the following two conditions:
(1) This device must not cause interference; and
(2) This user must accept any interference, including interference that may cause undesired operation of the device.
To maintain compliance with RF exposure guidelines, this equipment should be installed and operated with a minimum distance of 20cm between the lamp and your body.

Le présent appareil est conforme aux CNR d'Industrie Canada applicables aux appareils radio exempts de licence. L'exploitation est autorisée aux deux conditions suivantes:
(1) l'appareil ne doit pas produire de brouillage, et
(2) l'utilisateur de l'appareil doit accepter tout brouillage radioélectrique subi, même si le brouillage est susceptible d'en compromettre le fonctionnement.
Pour maintenir la conformité aux directives d'exposition aux radiofréquences, cet équipement doit être installé et utilisé avec une distance minimale de 20 cm entre le radiateur et votre corps.

PRODUCT OVERVIEW

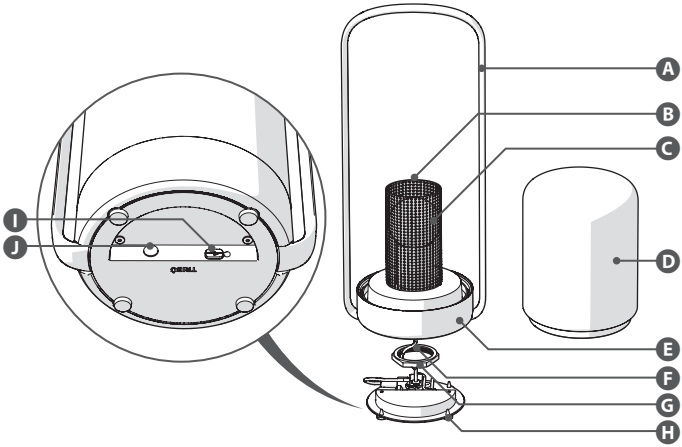

PARTS LIST

- **A** Handle
- **B** Light diffuser
- **C** LED light
- **D** Lamp shade
- **E** Base
- **F** Cable
- **G** Locking ring
- **H** Base plate
- **I** USB-C port
- **J** On/off button

SPECIFICATIONS

Power	2.5 W
Light source	Dimmable LED included
Voltage	9 - 12.6 V
Wattage	2.5 - 3.5 W
Average lifetime	30.000 hrs
Cycles on/off	≥ 10.000
Starting time	Within 1 sec
Warm-up time to 60% of the full light output	Immediate full light output
Light source dimensions	178 × 85 mm
Luminous flux	190 Lumen
Luminous efficacy	80 Lumen/Watt
Lumen maintenance	95% 3600H
Colour rendering index	Ra.80
Energy class	H
Charging	Power adaptor and cable included, # hrs of charging time
Control	Via Bluetooth connection
Dimming	Can be dimmed via Bluetooth connection
Nominal frequency	2402 – 2480 MHz
Maximum transmission power	4 dBm
IP rating	IP65
Operating temperature	0 ~ 30°C

ADAPTER SPECIFICATIONS

Supply voltage	100-240V : 5V/A 9V/2A
Power	18 W

INSTALLATION

CHECK THE CONTENTS OF THE PACKAGE

Check if all parts from the parts list are present and that no damage is visible on the parts. If parts are missing or damaged, please contact your local Tribù dealer.

ASSEMBLING THE LAMP

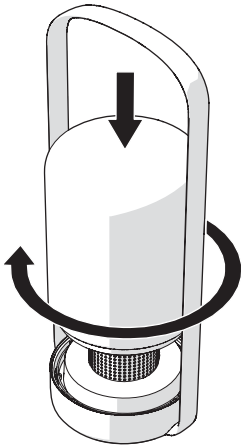

1. Screw the lamp shade onto the base.

CHARGING THE LAMP

1. Install a plug type on the adapter that matches your wall socket.

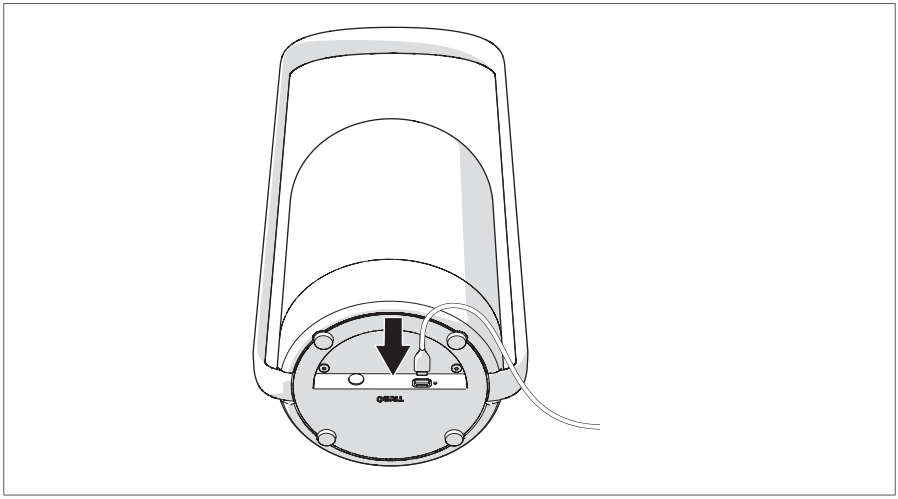

2. Connect the adapter to a wall socket and the lamp.

⚠ Only charge the lamp with an USB-C cable. Any other USB types may damage the lamp.

⚠ Do not charge the lamp outdoors. Only charge the lamp indoors.

3. Charge the battery for at least 5 hours.
   The battery is fully charged after 8 hours.

OPERATING THE LAMP WITH THE BUTTON

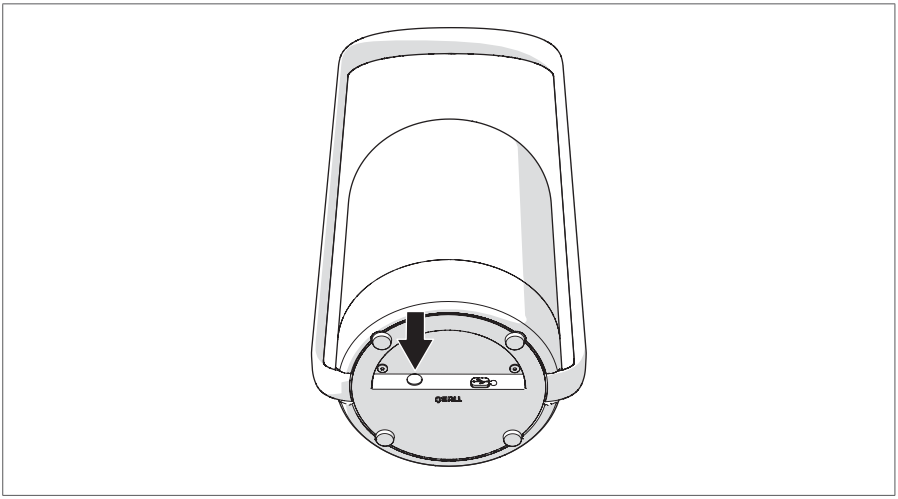

Press the on/off button to toggle between different levels of brightness:

- 30 % brightness
- 60 % brightness
- 100 % brightness
- 0 % brightness (OFF)

INSTALLING THE APP

1. Download the Tribù app for Android or iOS on your phone via Google Play or the Apple App Store.

   GET IT ON Google Play Download on the App Store

2. Switch the lamp on.
3. Activate Bluetooth on your phone.

CONNECTING WITH THE LAMP

1. Press and hold the on/off button for 10 seconds to reset the lamp. The lamp will blink to confirm a succesfull reset.
2. Press the on/off button once to switch the lamp on.
3. Open the Tribù app on your phone.
4. Tap devices on the bottom of your screen.
5. Tap add a device.

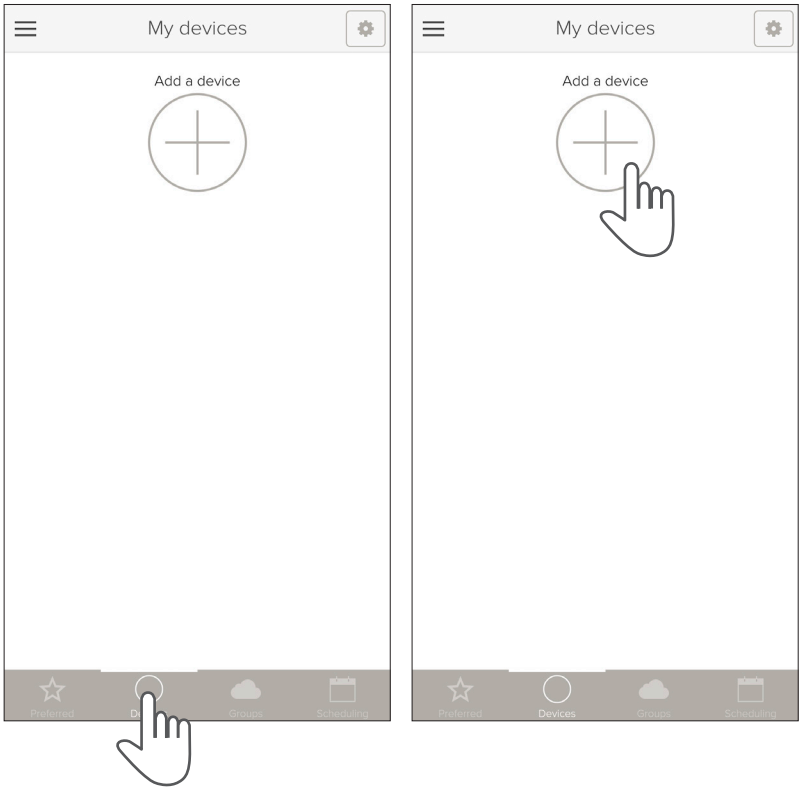

6. Tap the Bluethooth icon.
   The app will automatically connect to the nearest lamp.
   If the connection is succesfull the lamp will blink.

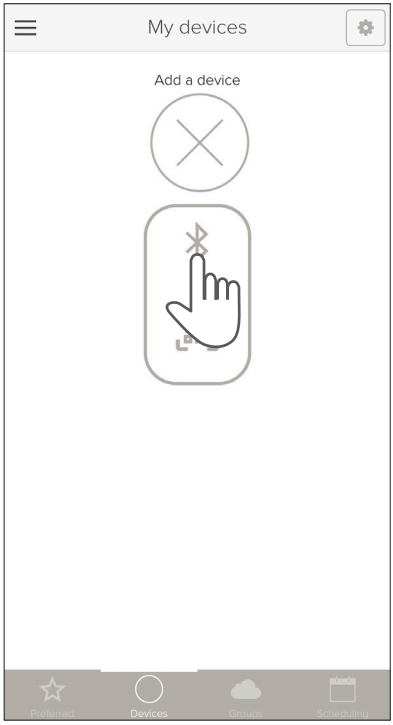

7. Once connected, the lamp will show up in the My devices tab.
   Repeat steps 1 – 3, if you want to connect more lamps.

USE

CONTROLLING THE LAMP

1. In the devices tab, tap the on/off button to activate or deactivate the lamp.

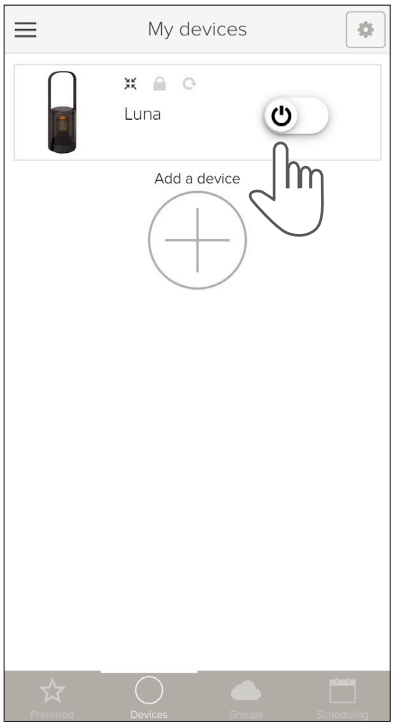

2. Tap the lamp to reveal more functions:

❶ Activates or deactivates the lamp.

❷ Controls the light intensity and displays the lifetime of the battery.

❸ Add this lamp to your preferred devices.

❹ Displays the intensity of the light.

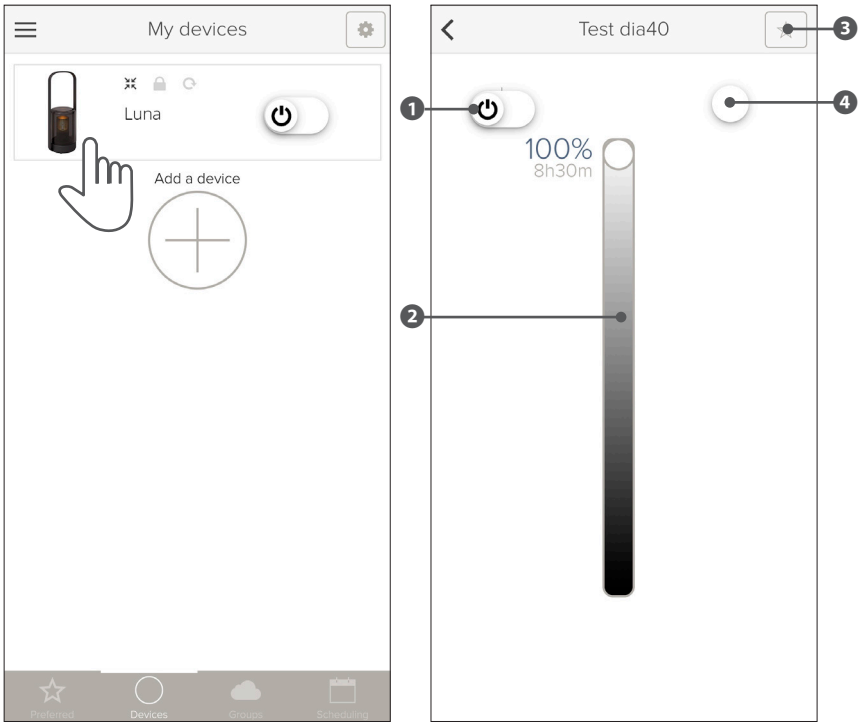

3. Return to the devices tab and tap the cog.
   Another cog will appear next to the lamp.

4. Tap the other cog to reveal the Create/Edit page with several options:

1. Change the name of your lamp.
2. Deactivate the button on the lamp. This can only be reactivated using the app.
3. Activate Deep Sleep mode. In this mode the lamp is turned off and the battery is preserved. It can only be activated with the physical on/off button.
4. Under Technical information you can find developer information.
5. Check for updates.

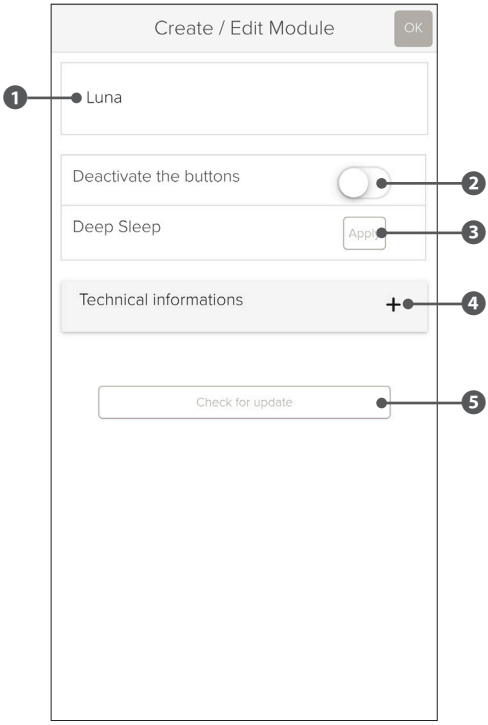

CREATE A GROUP

If you have several lamps, it is practical to link them together so that you can operate them as a group at the same time.

1. Go to the Groups tab.
2. The default group contains all of your lamps.
3. To create your own group, tap Create a Group.

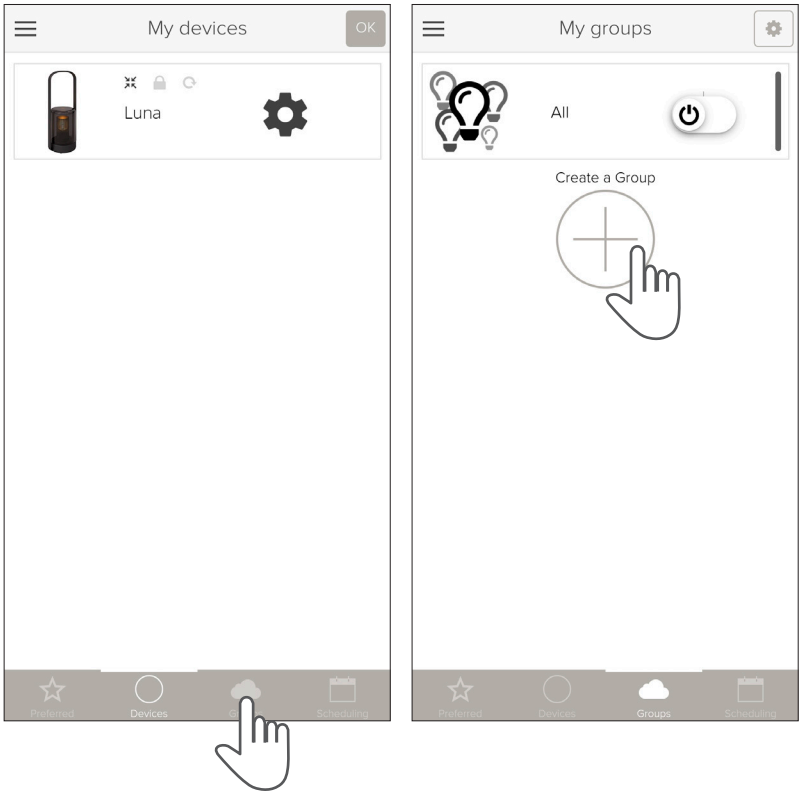

4. Inside the Create/Edit group page you can:

1. Change the name of the group.
2. Control which lamps are part of the group.

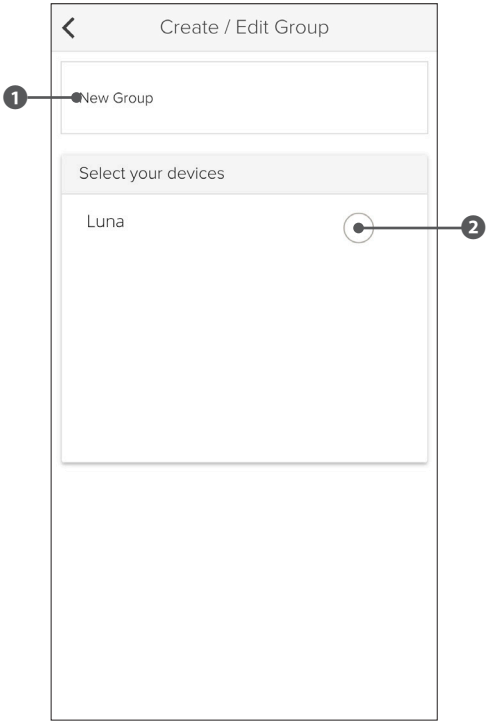

5. To remove a group, deselect all the lamps that are part of it.

PROGRAMMING

1. Go to the Scheduling tab.
2. Tap Create an Event.

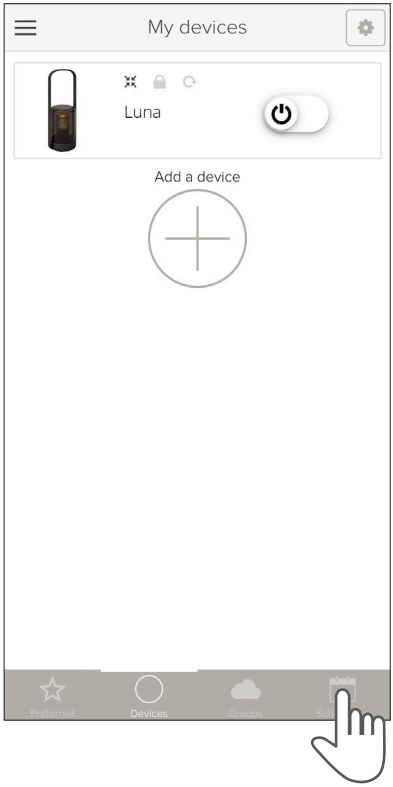

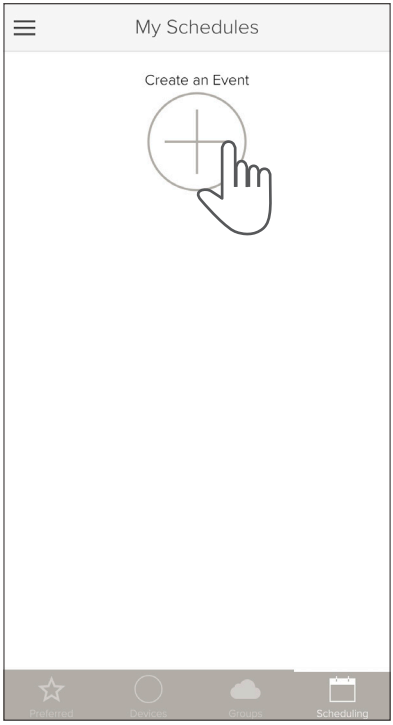

3. On the Event page you can:

1. Change the name of the event.
2. Choose days of the week your event should be activated.
3. Choose a start and/or end time.
4. Match the start and end time with the sunset and sunrise.
5. Choose to repeat your event weekly.
6. Choose which lamps are added to this event.

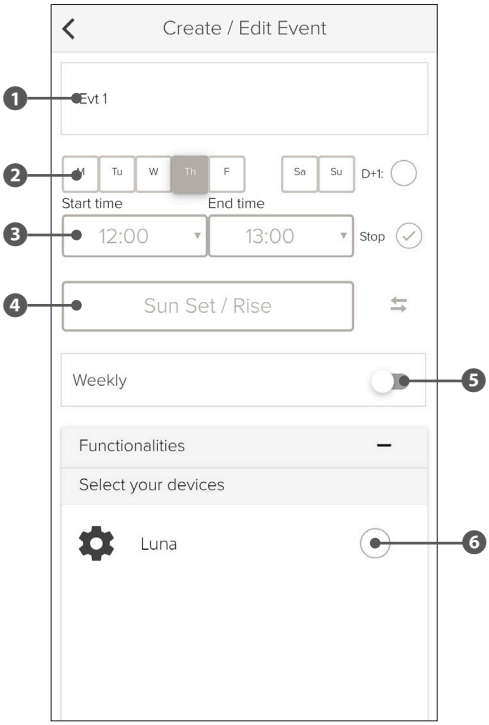

4. To remove an event simply deselect all the devices in the event.

SHARING

⚠ It is possible to share your configuration with your friends/family or to load a configuration you have received.

1. Tap Menu in the upper left corner.
2. Then tap Save/load Configuration.

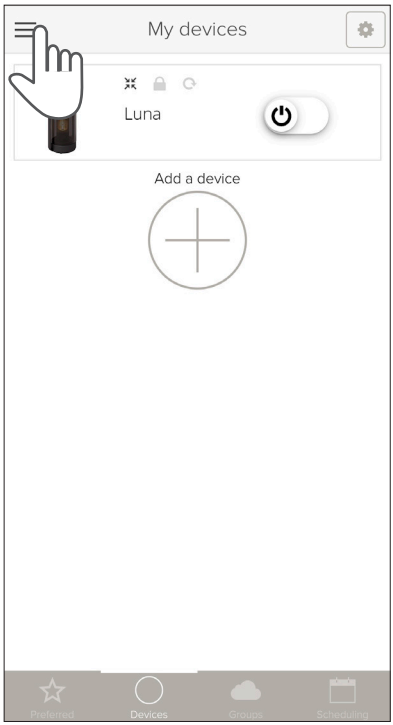

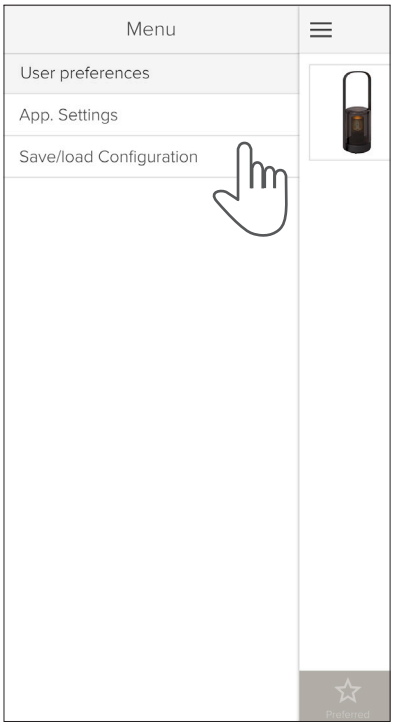

3. Tap Share.
4. After you enter a password tap Save.

⚠ You will now get the option to share a file via email or WhatsApp. The recipient can simply tap open this file in the Tribù Monsieur Tricot app and access your configuration.

⚠ Do not forget to communicate the password you entered in step 4.

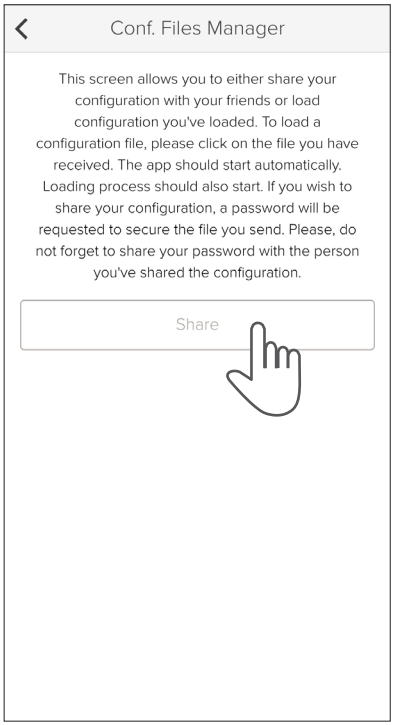

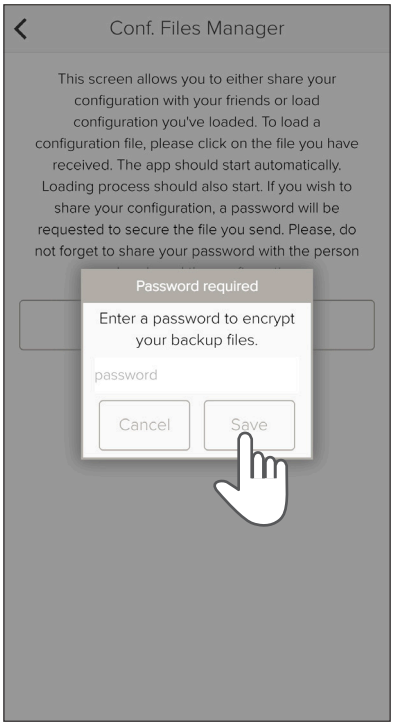

MAINTENANCE

REPLACING THE LED LIGHT

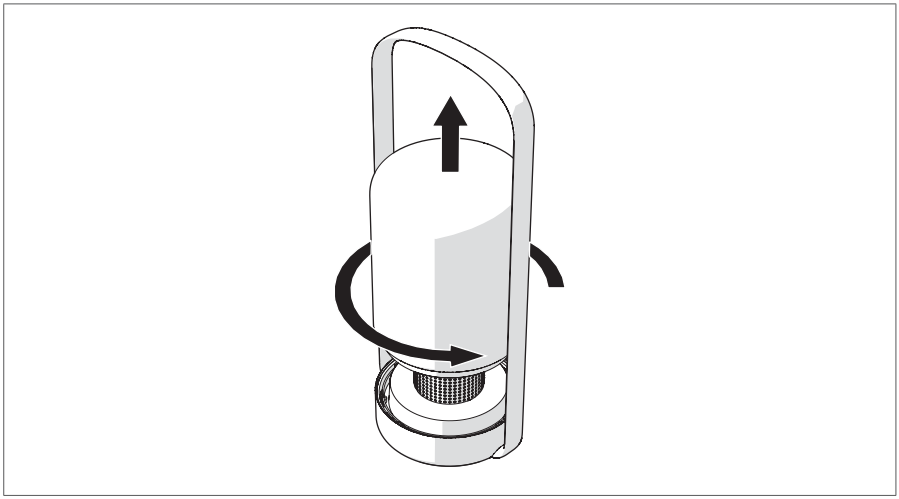

1. Unscrew the light shade from the base.

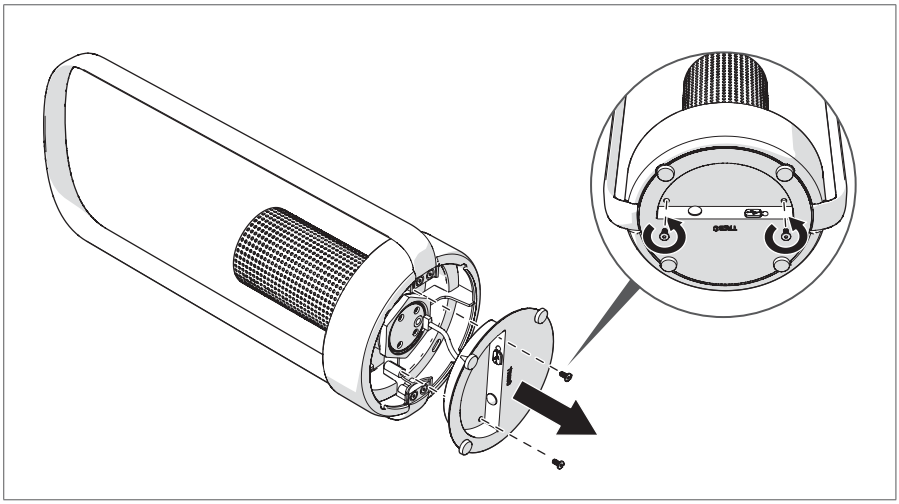

2. Unscrew the two screws from the base plate.
3. Remove the base plate.

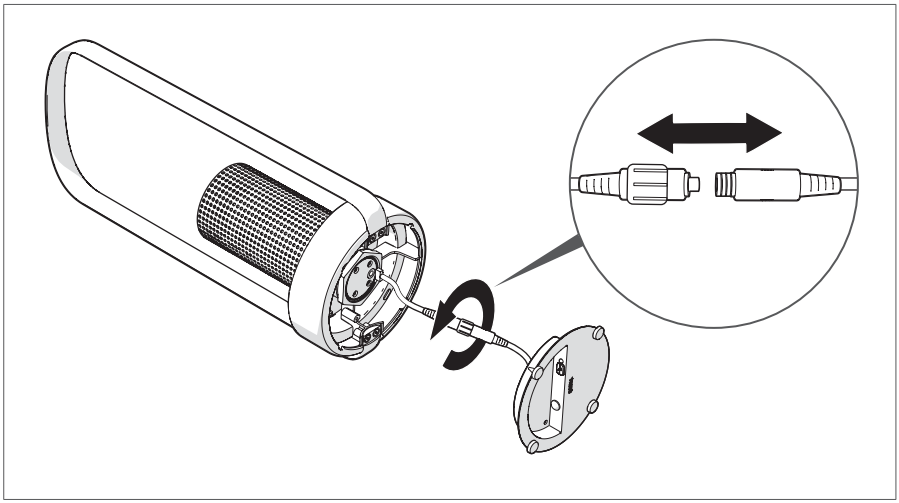

4. Unscrew the two cable parts.

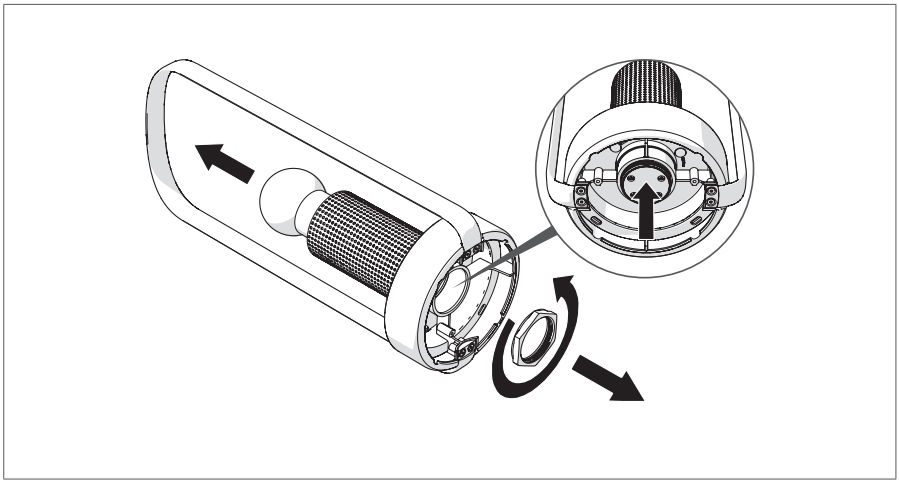

5. Unscrew the locking ring from the LED light.
6. Remove the LED light from the base by pushing it from the bottom.

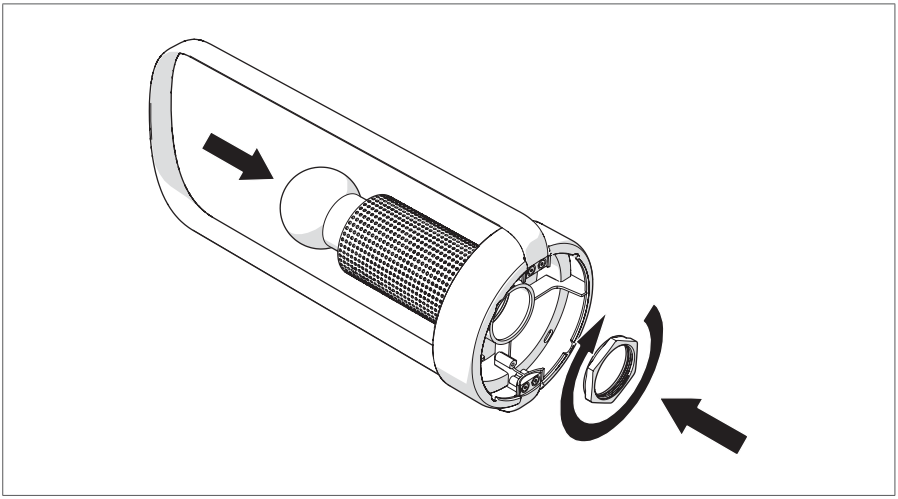

7. Replace the LED light with a new LED light.
8. Reassemble the Luna lamp.

CLEANING THE LAMP

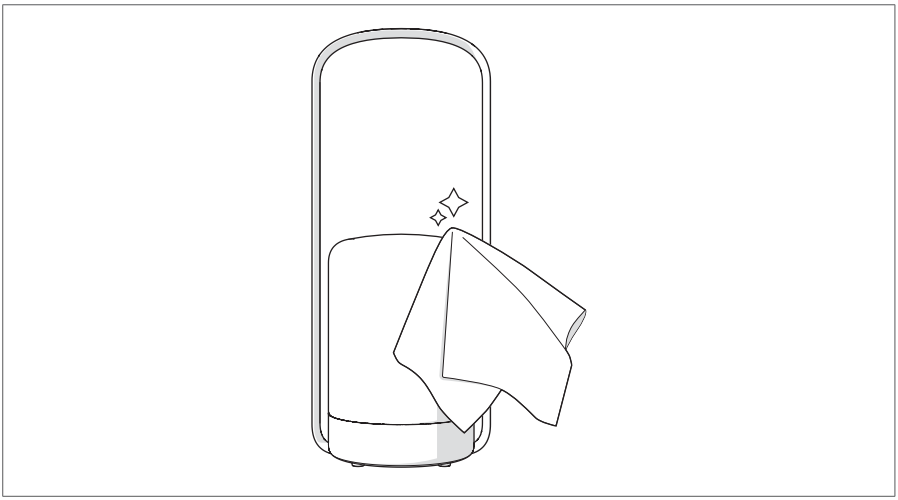

Clean the lamp shade and the base with a soft, damp cloth.

TROUBLESHOOTING

Problem	Solution
I can not find the lamp in de app.	Press and hold the on/off button for 10 seconds to reset the lamp. The lamp will blink to confirm a succesfull reset.
I can not switch the lamp on/off with the on/off button.	Ensure the lamp is not switched off in the app.

Produced by:

TRIBÙ
Oude Heidestraat 72
3740 Bilzen
Belgium

www.tribu.com