MONSIEUR TRICOT

User manual English

Version 1.0 issued on 11-06-2019

TRIBÙ
The art of leisure

Monsieur_Tricot_User_Manual_V2.indd 1 15/09/2020 15:17:50

MONSIEUR TRICOT

Preface **4**

The story of Monsieur Tricot **4**
Collection overview 5
Intended use 6

Safety instructions **6**

STANDING

Product overview standing **18**
Parts list 18
Specifications 19
Adapter specifications 19
Accessories 19

Installation **20**
Check the content of the package 20
Charging the led light 20
Installation of the Casambi app 20
Making connection with the lamp(s) 21

Use **22**
Change the lamp profile 22
Create a group 22
Switching the lamp(s) on and off 22
Dimming lamp(s) and groups 23
Gallery 23
Create a scene 24
Set a timer 24

Wireless remote **25**
Product overview 25
Installation 25
Adding scenes 26

Maintenance **27**
Replacing the light source 27
Cleaning the cover 32

Troubleshooting **36**

Disclaimer **36**

Disposal **36**

Monsieur_Tricot_User_Manual_V2.indd 3 15/09/2020 15:17:50

PREFACE

Congratulations on the purchase of your Monsieur Tricot lamp. Its warm glow and hand-crocheted or knitted fabric will cast beautiful shadows as a magical backdrop for long, cosy summer nights. The Monsieur Tricot hanging and standing objects form a complete family of lights – you can read their story below.

This user manual contains all the necessary information for a correct, efficient and safe use of your lamp. We invite you to read this information carefully before installing or using the product.

One variant of the Monsieur Tricot collection has been used as an example to explain the instructions. It may be possible that your lamp looks slightly different.

THE STORY OF MONSIEUR TRICOT

Designer Ilia Eckardt grew up immersed in the Belgian fashion scene, his mother Hilde Frunt knitting prototypes for Belgian fashion designers such as Raf Simons, Ann Demeulemeester and Dries Van Noten. Fascinated by their world, Ilia worked on several knitting projects of his own, experimenting with innovative knitting techniques and materials.

Monsieur Tricot is his first creation, a family of in- and outdoor lighting objects, knitted or hand-crocheted with an innovative, weatherproof yarn. The sphere shaped lights give a warm glow and the different patterns cast beautiful shadows. The knitting and crocheting is done in Belgium by a network of artisans and every item is checked by Ilia and his mother.

As family is very important to the designer, he created his light objects as a family. Meet the handsome Monsieur Lebonnet, the graceful Madame Latoque, the chic Madame Cachet and their nephew Monsieur Ellipse.

Monsieur_Tricot_User_Manual_V2.indd 4 15/09/2020 15:17:50

COLLECTION OVERVIEW

STANDING

Monsieur Lebonnet

dia 30cm
080130S

dia 40cm
080140S

dia 60cm
080160S

Madame Latoque

dia 30cm
080230S

dia 40cm
080240S

Madame Cachet

dia 30cm
080330S

dia 40cm
080340S

dia 50cm
080350S

COLORS

00-White 10-Linen 89-Wengé

60-Brick 30-Moss

ACCESSORIES

Wireless Switch
08010

Monsieur_Tricot_User_Manual_V2.indd 5 15/09/2020 15:17:50

INTENDED USE

The product is only intended as in- or outdoor led lighting. Any change to the product can have consequences for safety, warranty and correct operation.

SAFETY INSTRUCTIONS

- Only use the product as described in this manual.
- Do not use a damaged product.
- Do not drop the product and avoid bumping.
- Do not use the product if a part is damaged or defective. Replace a damaged or defective part immediately.
- Always switch off the power before starting installation or maintenance work.
- Do not tumble dry the removable cover.
- Installation must be done by an electrical technician.
- Any changes made to the product can have consequences for safety, correct operation and warranty procedures.

Monsieur_Tricot_User_Manual_V2.indd 6 15/09/2020 15:17:51

PRODUCT OVERVIEW STANDING

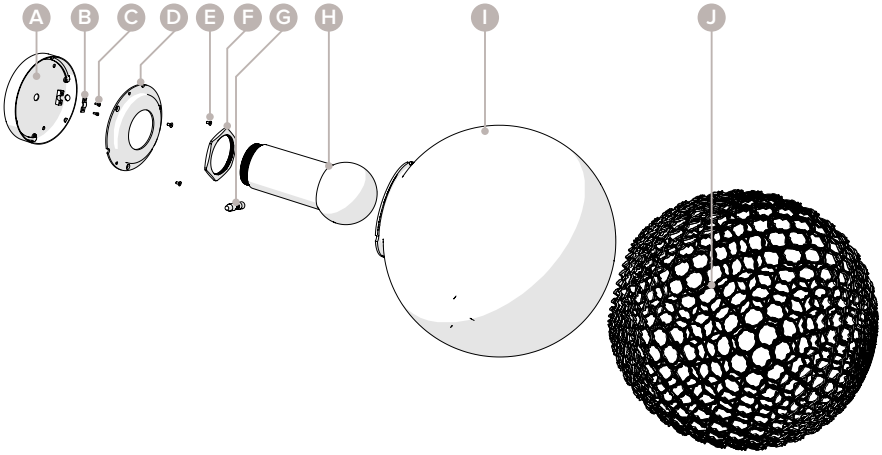

PARTS LIST

- A Base
- B Strain relief
- C Allen screw
- D Lamp holder
- E Countersunk head screw
- F Lamp lid
- G Charging port
- H LED light
- I Sphere
- J Removable cover

Monsieur_Tricot_User_Manual_V2.indd 19 15/09/2020 15:17:56

SPECIFICATIONS

Power	25W
Light source	Dimmable LED included
Voltage	12V
Wattage	3.5W (+15.6W when charging)
Average lifetime	≥ 5000 hrs
Cycles on/off	≥ 45000
Starting time	Within 1 sec
Warm-up time to 60% of the full light output	Immediately full light output
Light source dimensions	178 x 85 mm
Luminous flux	235 Lumen
Luminous efficacy	72 Lumen/Watt
Lumen maintenance	L70
Colour rendering index	Ra.82
Energy class	A+
Battery	Rechargeable battery, up to 12 hrs operational at 100%
Charging	Power adaptor and cable included, 5 hrs of charging time
Control	Via Bluetooth connection or a wireless remote (art.nr 08010)
Dimming	Can be dimmed via Bluetooth connection

ADAPTER SPECIFICATIONS

IP code	IP44
Supply voltage	230V : 24V
Power	21W

ACCESSORIES

Wireless remote	Art. nr. 08010

Monsieur_Tricot_User_Manual_V2.indd 20 15/09/2020 15:17:56

INSTALLATION

CHECK THE CONTENT OF THE PACKAGE

Check if all parts from the parts list are present and that no damage is visible on the parts. In case parts are missing or damaged, please contact your local Tribù dealer.

CHARGING THE LED LIGHT

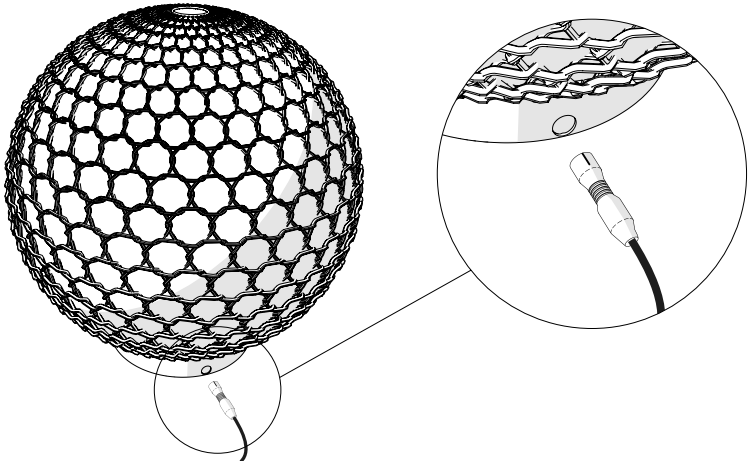

1. Plug in the adapter. Make sure the white stripe on the end of the cable is facing up.
2. Charge the battery for at least 5 hours.
2 The battery is fully charged when the LED light next to the LED filaments is off.

INSTALLATION OF THE CASAMBI APP

1. Download the Casambi app for Android or iOS on your phone via Google Play or the Apple App Store.
2. Switch on the lamp(s) by connecting the adapter.
3. Activate Bluetooth on your phone.
4. Open the Casambi app on your phone.

Monsieur_Tricot_User_Manual_V2.indd 21 15/09/2020 15:17:56

MAKING CONNECTION WITH THE LAMP(S)

1. Tap ‘Nearby devices’. All light sources supported by the Casambi app are shown.
2. Select a lamp.

2 Tap ‘Identify lamp’ to check which lamp is activated. The lamp will start blinking.

3. Tap ‘Add to...’. The existing networks are shown.

2 When you use the Casambi app for the first time it will automatically create a network that can only be accessed with the device that has created this network.

4. Select the automatically created network. The lamp is now connected to the network.

Repeat step 1 – 4, if you want to add another lamp to the network.

Monsieur_Tricot_User_Manual_V2.indd 22 15/09/2020 15:17:57

USE

CHANGE THE LAMP PROFILE

1. In the ‘Lamps’ tab, double tap a lamp.
2. Under ‘Information’ you can change the name of the lamp and give it an icon.
3. Under ‘Start status for activation’ you can select the ‘Standard mode’ and ‘Last status’.

2 In the ‘Standard mode’ the lamp will be switched on at 100%. In ‘Last status’ the lamp is switched on in the settings as when it was last switched off.

CREATE A GROUP

If you have several lamps, it is practical to group them together so that you can operate them as a group at the same time.

1. Go to the ‘Lamps’ tab.
2. Tap ‘Edit’ in the top right corner.
3. Touch and hold any lamp on the screen. Drag the lamp onto another lamp to create a group.

2 You can drag other lamps into the group by repeating these steps.

4. Double tap the group to change the name of the group.
5. Tap ‘Done’ at the top right corner of the screen.

SWITCHING THE LAMP(S) ON AND OFF

1. Go to the ‘Lamps’ tab.
2. Tap a lamp or group to switch it on.
3. Tap again to switch off the lamp or group.

Monsieur_Tricot_User_Manual_V2.indd 23 15/09/2020 15:17:57

2 Tap ‘All lamps’ to switch on all lamps. Tap again to switch off all lamps.

DIMMING LAMP(S) AND GROUPS

1. Go to the ‘Lamps’ tab.
2. Touch and hold any lamp or group on the screen and move your finger to the left or right to determine the dimming percentage.

2 Open a group by double tapping it. This way you can dim a lamp which is part of a group.

2 Tap and hold any lamp on the screen for three seconds to open the dim bar.

GALLERY

The ‘Gallery’ tab gives you a good overview of all lamps in the room and allows you to easily operate them.

1. Tap the ‘Gallery’ tab.
2. Tap ‘Edit’ in the top right corner.
3. Tap the plus icon in the top left corner.
4. Tap ‘Take photo’ to take a photo or ‘Choose existing’ to choose an existing photo.
5. Tap the plus icon in the top left corner and select a lamp.
6. Tap ‘Done’ in the top right corner. The circle visualizes the lamp.
7. Scale the circle until it is equal to the size of the lamp on the photo.
8. Place the circle on top of the lamp and tap ‘Done’ in the top right corner.

2 Repeat steps 5 – 8, if you want to add another lamp in the photo.

2 Operate the lamps from the ‘Gallery’ tab by tapping a circle on the screen. Tap and hold a circle on the screen for three seconds to open the dim bar.

Monsieur_Tricot_User_Manual_V2.indd 24 15/09/2020 15:17:57

CREATE A SCENE

The ‘Scenes” tab allows you to save different scenes.

1. Set up your lamps to the desired intensity.
2. Tap the ‘Scenes’ tab.
3. Tap ‘Edit’ in the top right corner.
4. Tap the plus icon in the top left corner.
5. Enter a scene name.
6. Tap ‘Add scene’ and select the lamps that you want to add to the scene.
7. Tap ‘Done’ in the top right corner.

2 Repeat these steps, if you want to save another scene.

SET A TIMER

By setting a timer you can switch lamp(s) on or off at set times or switch scenes automatically.

2 You must first save different scenes before you can assign them to a timer.

1. Tap the ‘More’ tab.
2. Tap ‘Timers’.
3. Tap ‘Edit’ in the top right corner.
4. Tap the plus icon in the top left corner.
5. Tap ‘Switches ON’ to indicate on which days, time or moment the scene should be activated.
6. Tap ‘Done’ in the top right corner.
7. Tap ‘Switches OFF’ to indicate on which days, time or moment the scene should be deactivated.
8. Tap ‘Add scene’ and select one of the saved scenes.
9. Tap ‘Done’ twice in the top right corner.

2 If you have selected multiple scenes, make sure to set the end time of the first scene as the start time of the next scene.

Monsieur_Tricot_User_Manual_V2.indd 25 15/09/2020 15:17:57

WIRELESS REMOTE

PRODUCT OVERVIEW

The wireless remote is a wall control button that you can use to easily control your lamp(s).

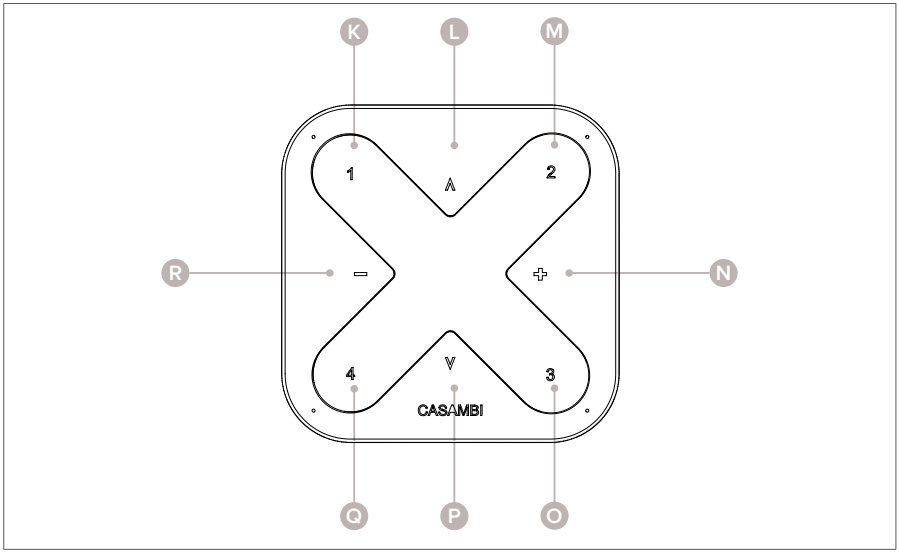

- K Preset button 1
- L Multi-purpose button 1
- M Preset button 2
- N Dim up
- O Preset button 3
- P Multi-purpose button 2
- Q Preset button 4
- R Dim down

Monsieur_Tricot_User_Manual_V2.indd 26 15/09/2020 15:17:57

INSTALLATION

1. Open the Casambi app on your phone.
2. Tap ‘Nearby devices’ and select the Casambi Express.
2 Make sure that the Casambi Express is active by pressing two buttons simultaneously.
3. Tap ‘Add to...’. The existing networks are shown.
4. Select the desired network. The Casambi Express is connected to the network.

ADDING SCENES

1. Select one of the four options.
2. Select the desired scene. The scene has been added to the option.

Monsieur_Tricot_User_Manual_V2.indd 27 15/09/2020 15:17:57

MAINTENANCE

REPLACING THE LIGHT SOURCE

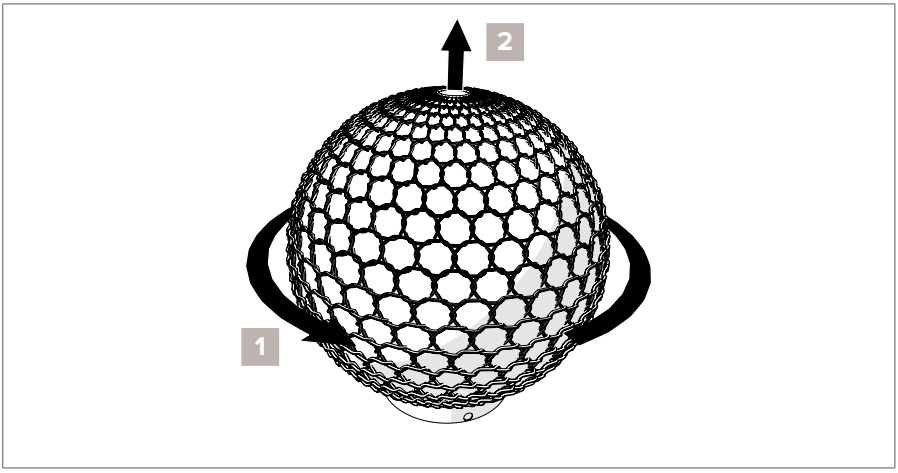

1. Turn the sphere counter clockwise until it is free of the bayonet catch.
2. Remove the sphere.

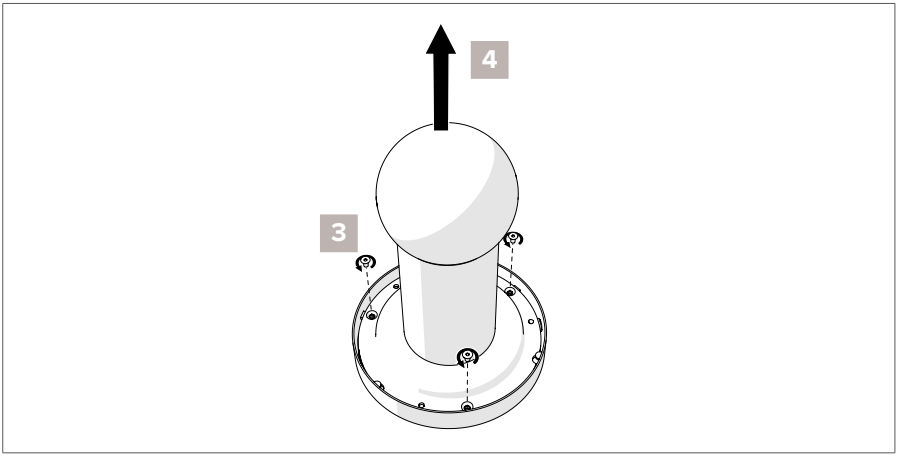

3. Loosen the countersunk head screws of the lamp holder.
4. Remove the lamp holder.

Monsieur_Tricot_User_Manual_V2.indd 28 15/09/2020 15:17:57

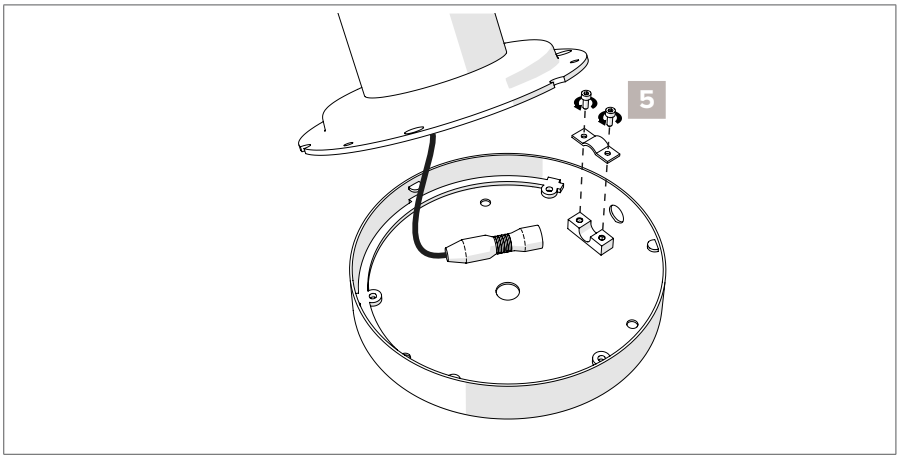

5. Loosen the Allen screws of the strain relief.

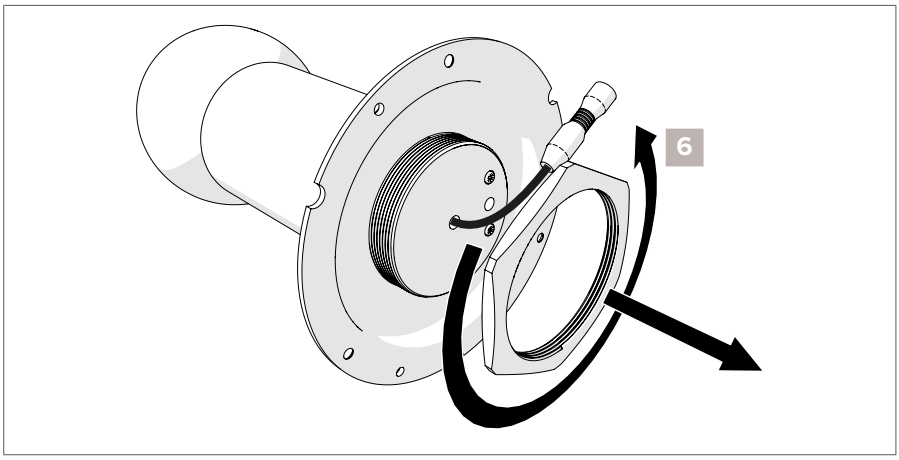

6. Turn the lamp lid counter clockwise to remove the lamp holder.
7. Replace the LED light with a new LED light.

Monsieur_Tricot_User_Manual_V2.indd 29 15/09/2020 15:17:58

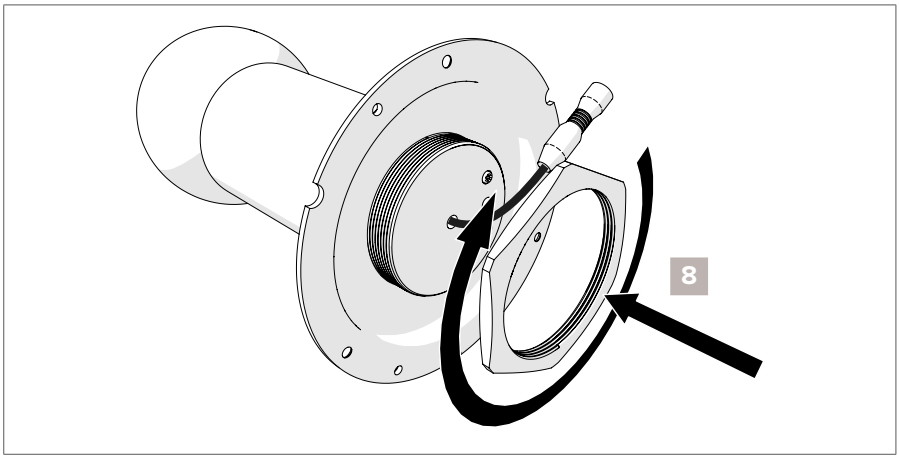

8. Fasten the lamp holder by turning the lamp lid on to the LED light.

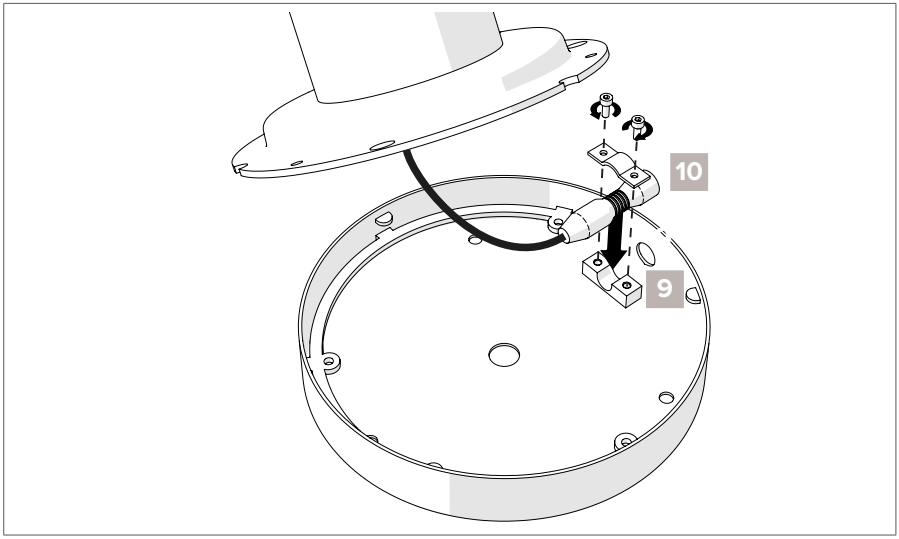

9. Place the charging port on the strain relief.

2 Make sure to point the white marking on the charging port upwards.

10. Fasten the Allen screws of the strain relief.

Monsieur_Tricot_User_Manual_V2.indd 30 15/09/2020 15:17:58

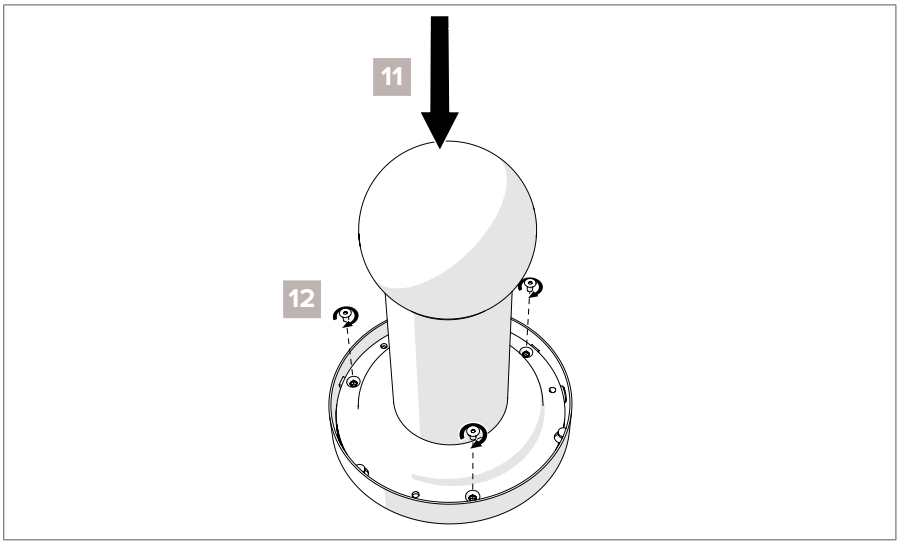

11. Place the lamp holder.

2 Make sure to place the lamp holder correctly by using the bayonet catch.

12. Fasten the countersunk head screws of the lamp holder.

Monsieur_Tricot_User_Manual_V2.indd 31 15/09/2020 15:17:58

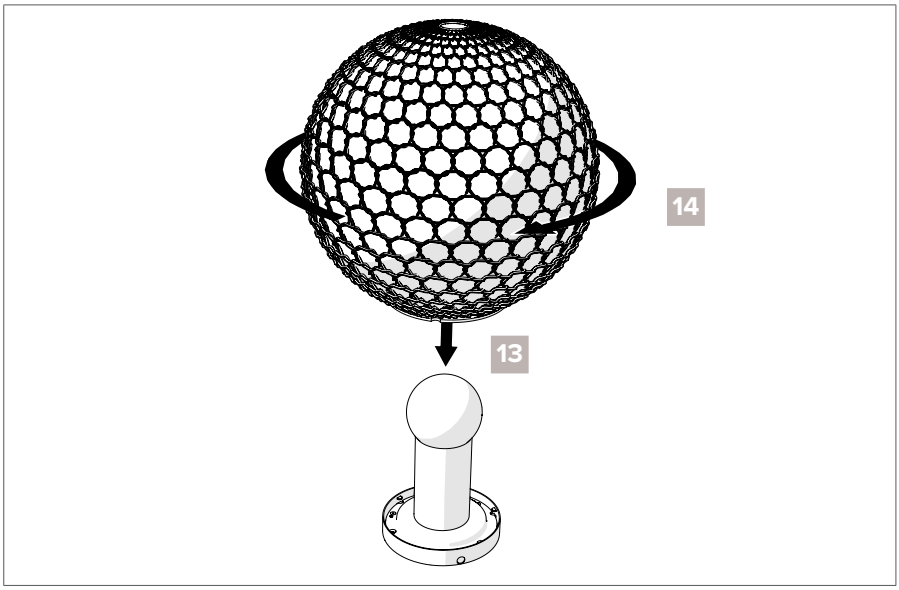

13. Place the sphere in the bayonet catch.
14. Turn the sphere clockwise until it is fastened.
15. Test whether the lamp is functioning properly.

Monsieur_Tricot_User_Manual_V2.indd 32 15/09/2020 15:17:58

CLEANING THE COVER

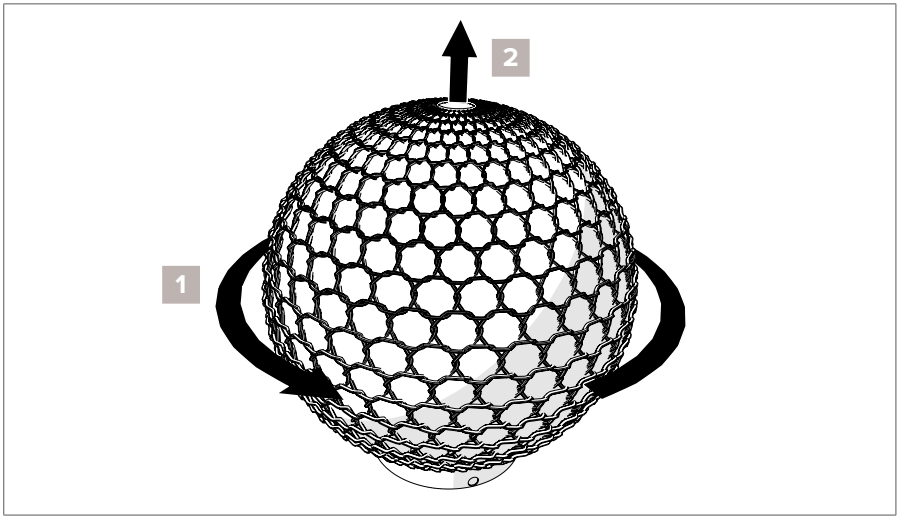

1. Turn the sphere counter clockwise until it is free of the bayonet catch.
2. Remove the sphere.

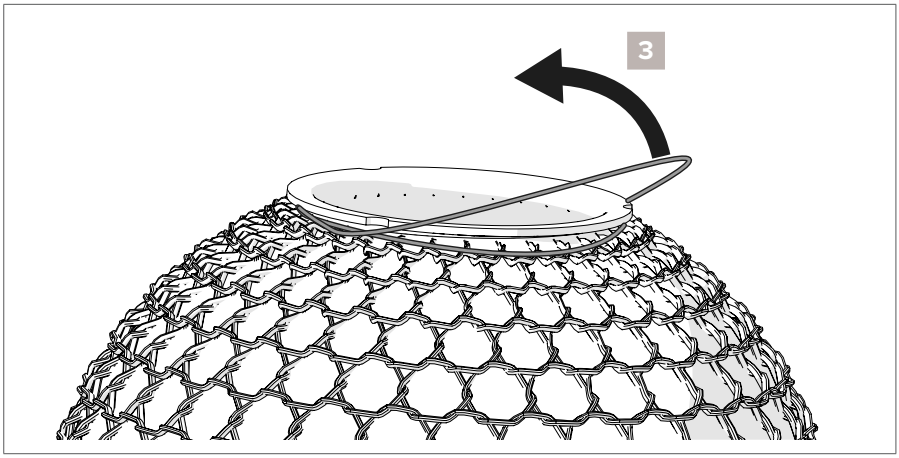

3. Loosen the elastic band of the removable cover.

Monsieur_Tricot_User_Manual_V2.indd 33 15/09/2020 15:17:59