i-box
Cosmos
Wave

Portable

I-BOX COSMOS BLUETOOTH SPEAKER

Caring for your Speaker

Important Safety Information

Important - Please read these instructions fully before installing or operating your speaker.

Keep away from flame sources such as lit candles.

Do not expose to dripping or splashed fluids. Objects filled with liquids, such as vases, must not be placed close to the speaker.

The unit should not be exposed to direct sunlight, very high or low temperature, moisture, vibrations, strong magnetic fields, high frequencies and dusty environments.

Do not place the product in enclosed bookcases or racks without proper ventilation. Ventilation should not be impeded by covering the ventilation openings with items, such as newspapers, table-cloths, curtains, etc.

Never attempt to insert wires, pins or other such objects into the vents or openings of the unit.

Do not disassemble or modify the Speaker, there are no user serviceable parts.

If the Speaker is damaged in anyway or malfunctions do not use. Consult a qualified service engineer.

Do not use abrasives, benzene, thinner or other solvents to clean the surface of the unit. To clean, wipe with clean soft cloth.

Do not dispose of this product with household waste at the end of its life cycle; hand it over to a collection centre for the recycling of electrical and electronic appliances.

This product contains a Li-ion battery and should be disposed of appropriately. Do not dispose of it with household waste at the end of its life cycle; hand it over to a collection centre for the recycling of electrical and electronic appliances with batteries. By recycling, some of the materials can be reused. You are making an important contribution to protect our environment. Please check with your Local Authority for recycling advice.

1. Safety information

Safety information 2-3

2. Getting to know your Cosmos Wave speaker

Features 5
Box contents 5
Controls 5-6

3. Getting started

Turning the power on 7
Charging your speaker 7
Bluetooth pairing 8
Speaker controls 9
Wall mounting 10
Mounting on the stand 11

4. Other Information

Specifications 12
Disclaimer 12
Declaration of conformity 12
Technical support 12

Features

Compatible with all Bluetooth enabled devices including iPhone™, iPad™, iPod Touch™, Blackberry™, HTC™, Samsung™, Nokia™ & many other smartphones & tablets.

Connect wirelessly or by cable via the built-in 3.5mm jack socket.

Box Contents

1x i-box Cosmos Wave Portable Bluetooth Speaker
1x Micro USB cable
1x Aluminium stand
1x Plastic wall mount
2x Screws/Fixings

Getting to know your speaker

Your i-box Cosmos Wave is very simple to set up, but before we get into that please be sure to read through the safety information on pages 2-3.

Now lets have a quick look at some of the important bits.

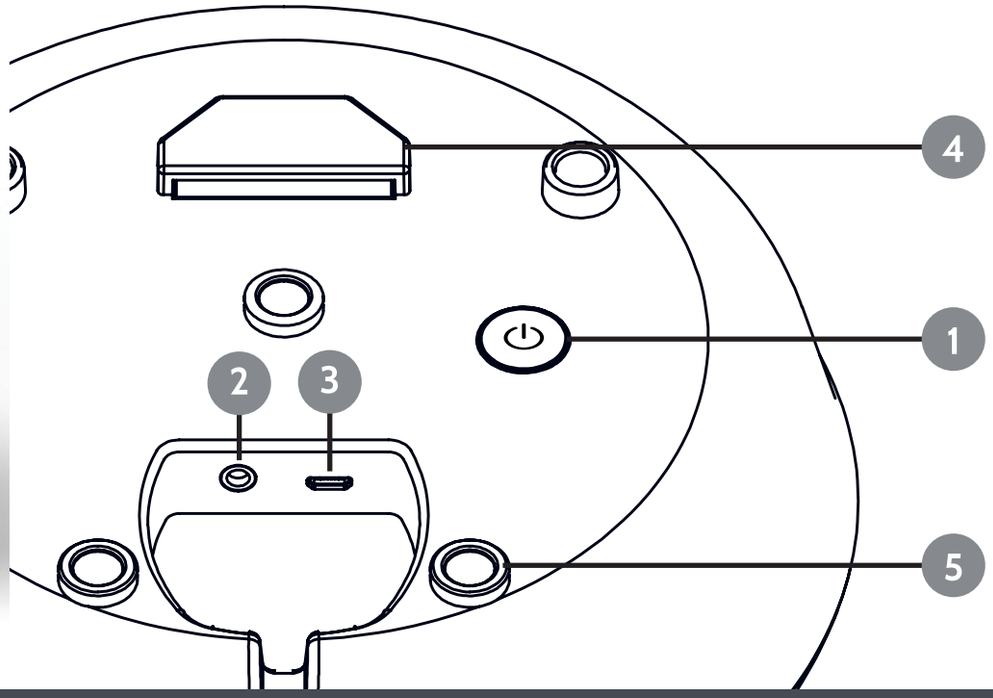

Controls

1. **Power button**
2. **AUX IN Port**
3. **Micro USB charging port**
4. **Wall mount slot**
5. **Feet**

Getting to know your speaker

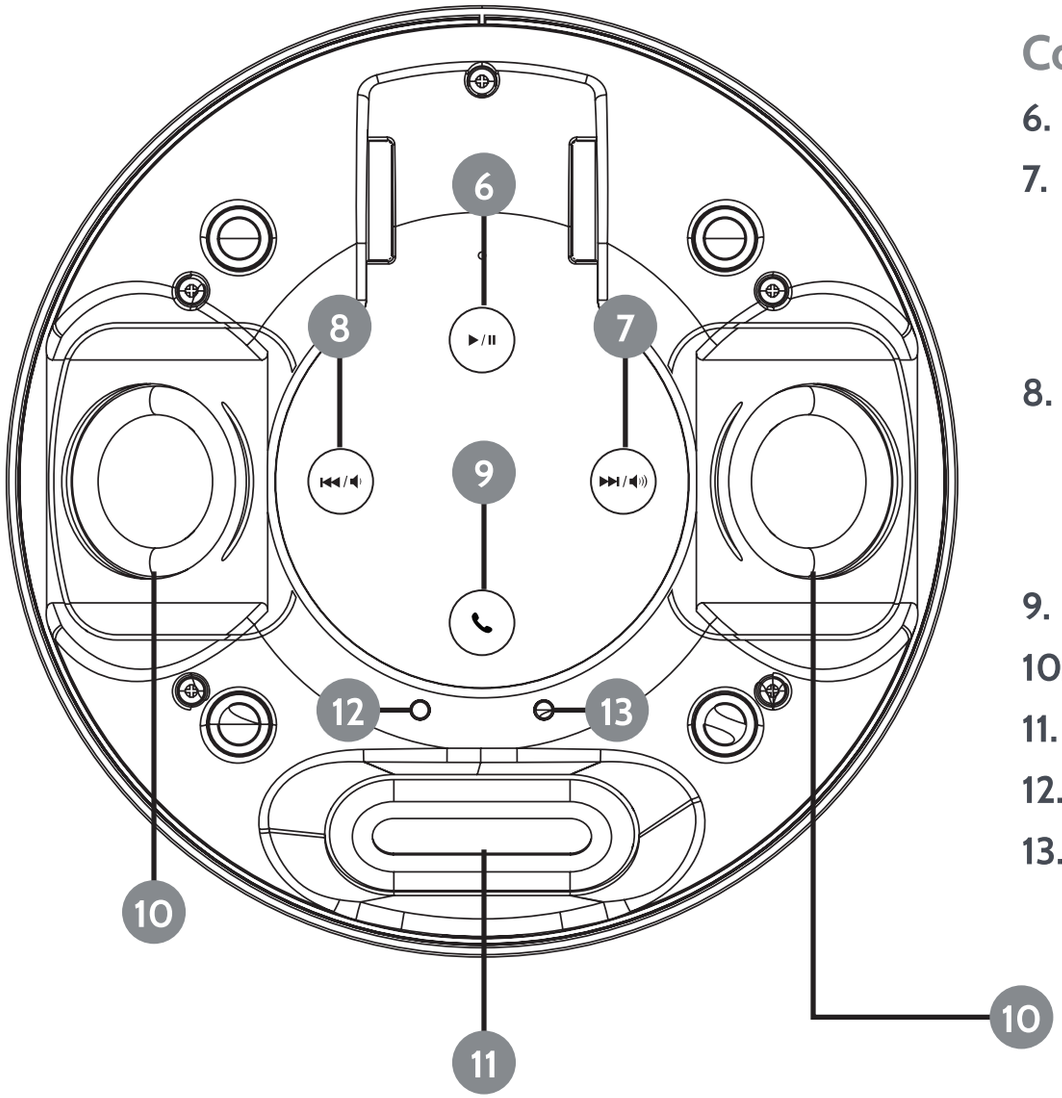

Controls

6. **Play/Pause**
7. **Increase volume**
   (short press)
   Next track
   (long press)
8. **Reduce volume**
   (short press)
   Previous track
   (long press)
9. **Hands free**
10. **Speakers**
11. **Passive radiator**
12. **Charge status LED**
13. **Power LED**

Powering up the Cosmos Wave

Press and hold the power button (1) on the reverse of the speaker for 3 seconds to power up the Cosmos Wave. The power LED (13) will light up red.

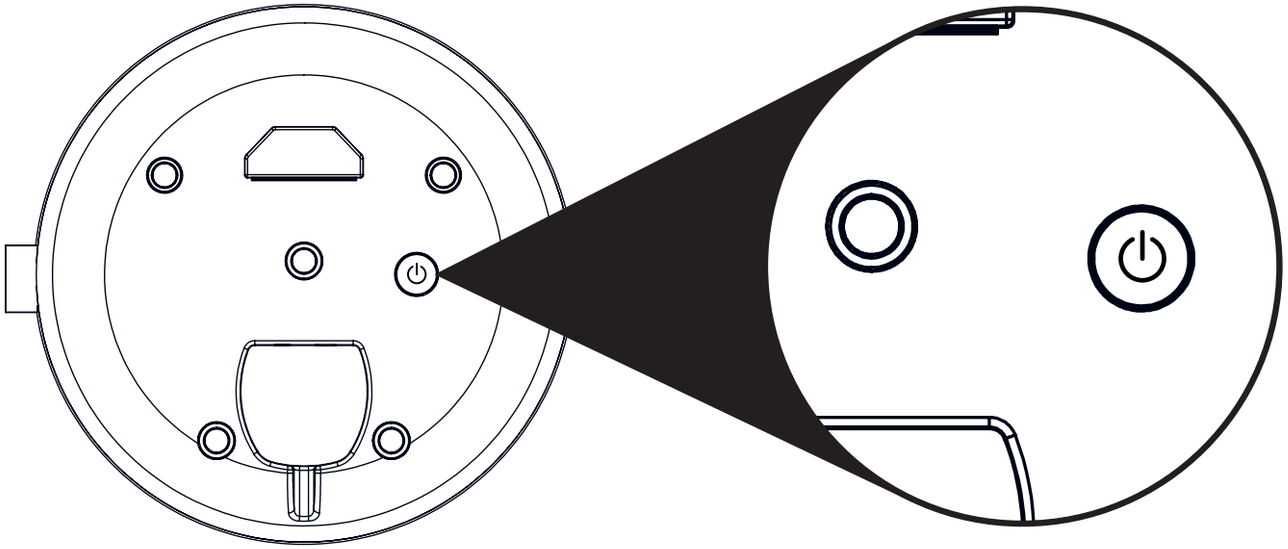

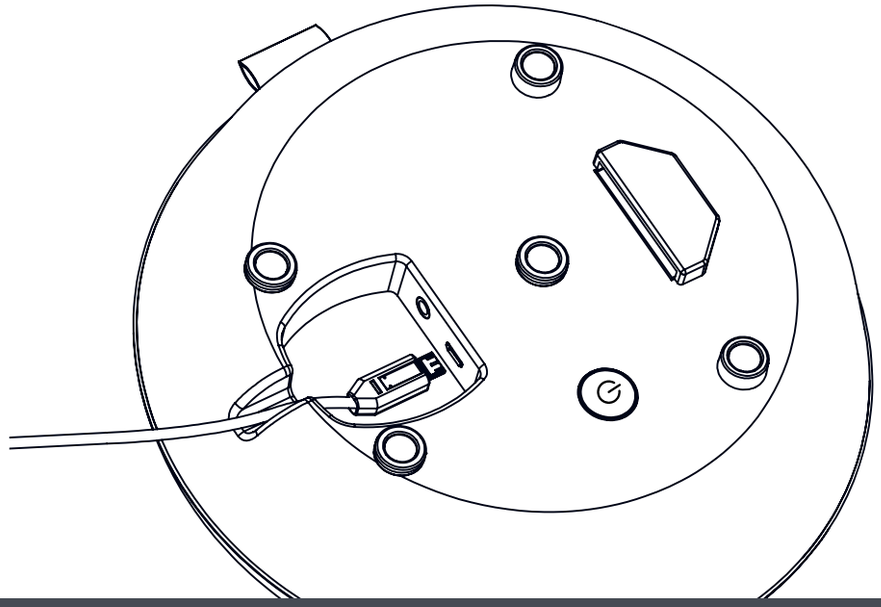

Charging your Speaker

Use the USB cable supplied to charge the Cosmos Wave. The USB cable connects to the micro USB port (3) on the reverse.

The charge status LED indicator (12) will light up red during charging, then green once the speaker is fully charged.
For best results, the first time you use this Bluetooth speaker, let it charge for 4-5 hours until fully charged.

Bluetooth Pairing

Pairing your speaker with Bluetooth enabled Android mobiles and tablets

1. Place the speaker and mobile tablet within 1 metre of each other. Turn on the speaker by pressing and holding the power button (1) for 3 seconds, the power LED (13) will flash red, the speaker is then ready to pair.

2. Select the Bluetooth function on your mobile and search for Bluetooth devices, the speaker will appear as "Cosmos Wave" in the Bluetooth device list select and pair.

3. Connection will normally be automatic if a password is required enter (0000). After successful connection, the power LED (13) will change to continuous red.

Please Note:

1. If the pairing is not successful, turn off the speaker and try pairing again.

2. After successful pairing, paired devices will remember each other. Unless pairing information is deleted, pairing should be automatic when both devices are switched on and in range of each other.

3. To pair with a new device follow steps 1-3 above after disconnecting the existing pair.

Pairing your speaker with iPhone™/iPad™/ iPod Touch™

Place the speaker and your iPhone™/iPad™ within 1 metre of each other. Turn on the speaker, the power LED (13) will flash red, the speaker is ready to pair. In iPhone/iPad General menu go to Bluetooth, tap on Bluetooth function, search the Bluetooth devices, tap "Cosmos Wave" to connect.

Pairing your speaker with a PC /laptop Mac running OS X 10 or above

To pair to a PC or Mac follow the same procedure as for a phone or tablet. After pairing to a Mac you will need to open System Preferences, click on Sound, click Output and select the Bluetooth speaker. Then click Input and select your speaker. Adjust the Input and Output volume to suit. You can also click on the "Show volume in menu bar" if you would like to control the volume from the menu bar. To show the Bluetooth status in the menu bar go to the Bluetooth preferences and click on the appropriate checkbox. During the pairing process, if you are asked for a password enter (0000).

Re-connecting to a paired device

Each time the speaker is turned on, there are two possible outcomes.

1. The speaker will connect automatically to the last connected device, just press play for playback.

2. The speaker will be listed on your devices screen as an available output channel, select the speaker as the output channel and play your music.

Controls / AUX IN / Power Off

Play/Pause Music

Press the ▶/II (6) button to pause the speaker and press again to resume playing.

Adjusting the Volume

1. Tap the ⏭/🔊 (7) to increase the volume.
2. Tap the ⏮/🔈 (8) to reduce the volume.
3. When maximum or minimum volume has been reached, a series of tones will sound.

Play Next/Previous Track

1. Press and hold the ⏭/🔊 (7) button to skip to the next track.
2. Press and hold the ⏮/🔈 (8) button to play the previous track.

AUX IN Connections

You can connect any audio output device to the AUX IN port (2) using the 3.5mm stereo audio cable supplied. You can then play music through the speaker from the connected device.

Bluetooth/Handsfree functionality will not work while using the AUX IN connection.

Auto Power-Off

The speaker unit will automatically "power down" after 10 minutes if no Bluetooth connection is made.

Handsfree Function

When there is an incoming call while your device is paired to the speaker, the music will pause and the ringing tone will be sent through the speaker.

1. Press the 📞 (9) button to answer the call.
2. Press the 📞 (9) button again to hang up the call. The paused music will restart automatically.
3. Press and hold 📞 (9) button for 3 seconds to ignore the incoming call.

Wall Mounting your Speaker

1. Drill two holes 29mm deep with a 6mm drill, with centres 66mm apart horizontally from one another.

2. Insert wall plugs and screw the wall mount to the wall

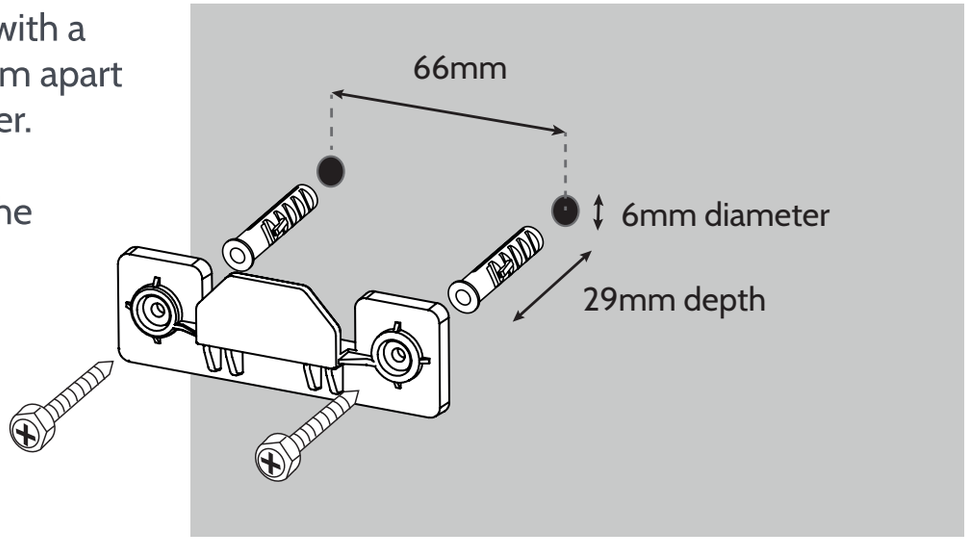

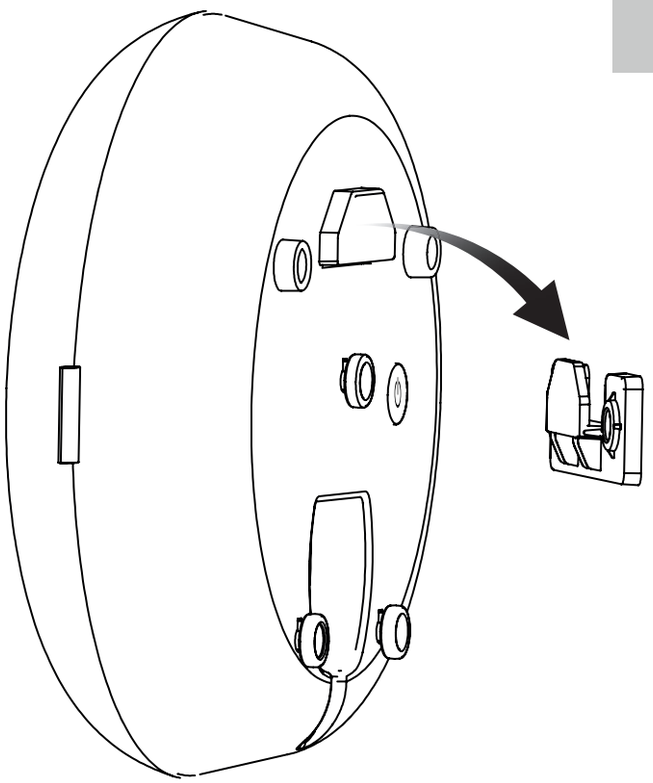

2. Hook the Cosmos Wave speaker on to the wall mount as shown once the wall mount fixing is connected to the wall securely.

Mounting your Speaker on the Stand

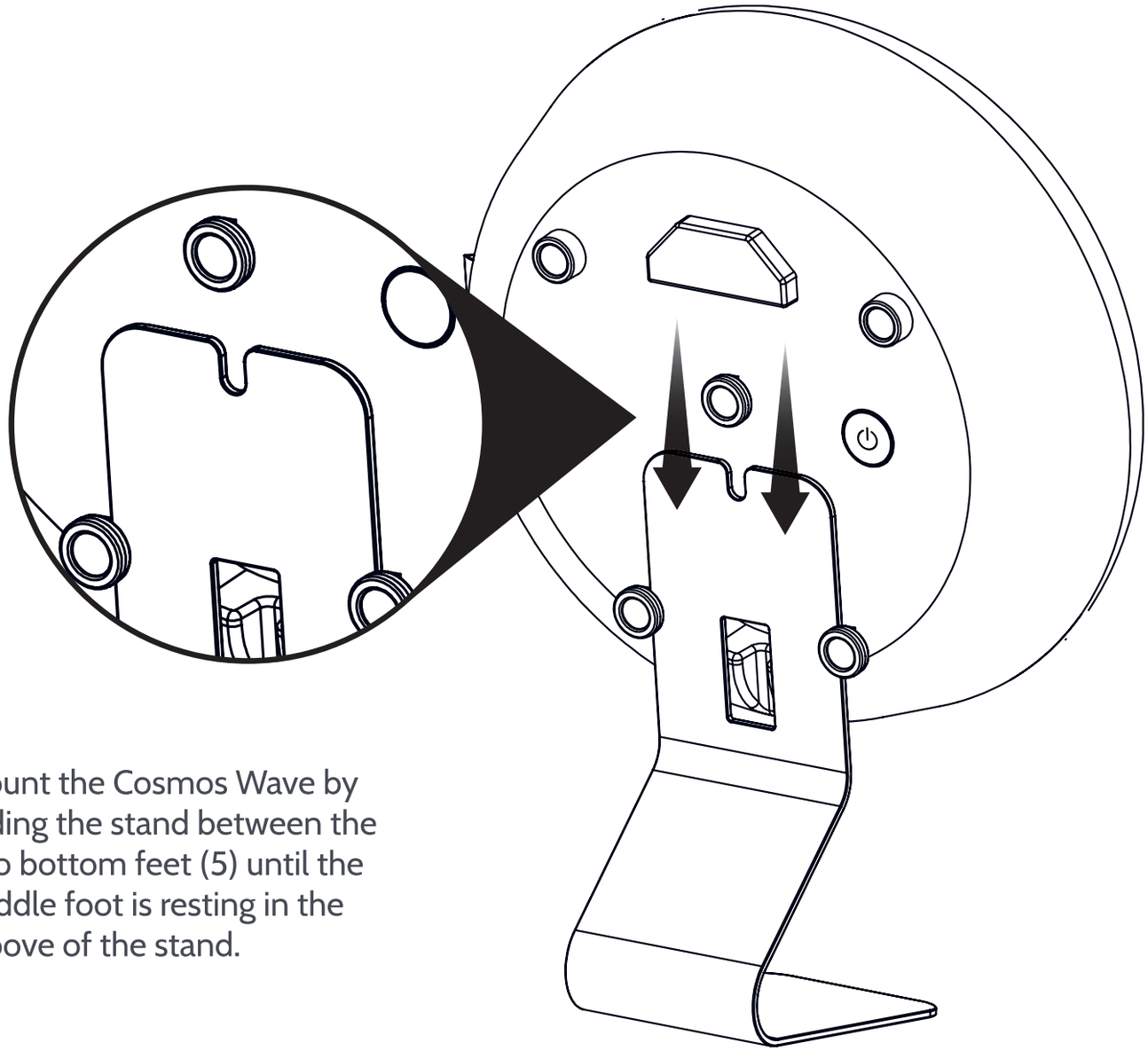

Mount the Cosmos Wave by sliding the stand between the two bottom feet (5) until the middle foot is resting in the groove of the stand.

FCC Warning Statement

Changes or modifications not expressly approved by the party responsible for compliance could void the user's authority to operate the equipment. This equipment has been tested and found to comply with the limits for a Class B digital device, pursuant to Part 15 of the FCC Rules. These limits are designed to provide reasonable protection against harmful interference in a residential installation. This equipment generates uses and can radiate radio frequency energy and, if not installed and used in accordance with the instructions, may cause harmful interference to radio communications. However, there is no guarantee that interference will not occur in a particular installation. If this equipment does cause harmful interference to radio or television reception, which can be determined by turning the equipment off and on, the user is encouraged to try to correct the interference by one or more of the following measures:

- - Reorient or relocate the receiving antenna.
- - Increase the separation between the equipment and receiver.
- - Connect the equipment into an outlet on a circuit different from that to which the receiver is connected.
- - Consult the dealer or an experienced radio/TV technician for help.

This device complies with part 15 of the FCC Rules. Operation is subject to the following two conditions: (1) This device may not cause harmful interference, and
(2) this device must accept any interference received, including interference that may cause undesired operation.