User’s Manual

URM01

IMPORTANT SAFETY INSTRUCTUIONS

Please read and observe all warnings and instructions given in this manual and those marked on the unit before use of the unit.

⚠ DANGER

- ★ Avoid direct contacts to water, moisture, any sorts of beverages, excessive heat and magnetic sources.
- ★ Do not handle the unit in with wet hands, especially when plugging or unplugging, to avoid electric shocks.

⚠ WARNING

- ★ Do not disassemble, modify, tamper or repair the unit yourself. Refer all servicing to qualified service personnel.
- ★ Do not drop or expose the unit to excessive shock.
- ★ Keep the device out of direct sun light, wind, high-humidity and dusts.
- ★ Plug in USB Transmitter properly. If reversely plugged, that may cause harmful damages.
- ★ Do not place the unit on hot area or block the ventilator of the unit to avoid overheat.

⚠ CAUTION

- ★ Do not relocate the unit while in use. That may cause malfunctioning of the unit.
- ★ Use the correct power source only.
- ★ Never place the unit or AC adaptor on a heat sensitive surface
- ★ Never allow any liquids to spill into any part of your product, and never expose the product to rain, water, seawater or moisture.
- ★ Never operate the unit during a thunderstorm.

FCC information

FCC notice "Declaration of Conformity Information"

This equipment has been tested and found to comply with the limits for a Class B digital device, pursuant to part 15 of the FCC rules. These limits are designed to provide reasonable protection against harmful interference in a residential installation. This equipment generates, uses and can radiate radio frequency energy and, if not installed and used in accordance with the instructions, may cause harmful interference to radio communications. However, there is no guarantee that interference will not occur in a particular installation. If this equipment does cause harmful interference to radio or television reception, which can be determined by turning the equipment off and on, the user is encouraged to try to correct the interference by one or more of the following measures:

1. Reorient or relocate the receiving antenna.
2. Increase the separation between the equipment and receiver.
3. Connect the equipment into an outlet on a circuit different from that to which the receiver is connected.
4. Consult the dealer or an experienced radio/TV technician for help.

FCC Conditions

This equipment has been tested and found to comply with Part 15 of the FCC Rules. Operation is subject to the following two conditions:

(1) This device may not cause harmful interference

(2) This device must accept any interference received, including interference that may cause undesired operation.

FCC Notice "Equipment Authorization" Information

This device complies with part 15 of the FCC Rules. Operation is subject to the following two conditions: (1) this device may not cause harmful interference, and (2) this device must accept any interference received, including interference that may cause undesired operation.

This device is authorized under Title 47 CFR 15.519 (the FCC Rules and Regulations).

The operation of this device is subject to the following restriction:

The changes or substitutions of the antennas which are furnished with the device is prohibited.

UWB devices may not be employed for the operation of toys. Operation onboard an aircraft, a ship or satellite is prohibited.

IMPORTANT NOTE:

FCC RF Radiation Exposure Statement:

This equipment complies with FCC RF radiation exposure limits set forth for an uncontrolled environment. This equipment should be installed and operated with a minimum distance of 20 centimeters between the radiator and your body. This transmitter must not be co-located or operating in conjunction with any other antenna or transmitter.

IC Statement

This UWB RF apparatus complies with Canadian RSS-GEN.

This device complies with Industry Canada license-exempt RSS standard(s). Operation is subject to the following two conditions: (1) this device may not cause interference, and (2) this device must accept any interference, including interference that may cause undesired operation of the device.

Le présent appareil est conforme aux CNR d'Industrie Canada applicables aux appareils radio exempts de licence. L'exploitation est autorisée aux deux conditions suivantes : (1) l'appareil ne doit pas produire de brouillage, et (2) l'utilisateur de l'appareil doit accepter tout brouillage radioélectrique subi, même si le brouillage est susceptible d'en compromettre le fonctionnement.

RF exposure

This device and its antenna(s) must not be co-located or operation in conjunction with any other antenna or transmitter.

Changes or modifications not expressly approved by the party responsible for compliance could void the user’s authority to operate the equipment.

EU Limitations

This device may not be installed into road or rail vehicles.

This product is sold to all CE countries.

BE	**GE**	**CZ**	**DK**	**DE**	**EE**	**IE**
EL	**ES**	**FR**	**HR**	**IT**	**CY**	**LV**
LT	**LU**	**HU**	**MT**	**NL**	**AT**	**PL**
PT	**RO**	**SI**	**SK**	**FI**	**SE**	**UK**

Declaration of conformity

We, OSSTEM IMPLANT Co., Ltd.

2 Floor, B-dong, 51, Mayu-ro 238beon-gil, Siheung-si, Gyeonggi-do, 15079, Republic of Korea

declare under our sole responsibility that our product.

CONTENT

1. Summaries 7

1.1 UWB RF module applications 7

1.2 Interface signals 7

1.3 Module Installation 7

2. Cautions 7

3. HARDWARE SPECIFICATIONS 8

3.1 GENERAL 8

3.2 PRODUCT CHACTERISTICS 8

3.3 ENVIRONMENT 8

3.3.1 Temperature 8

3.3.2 Humidity 8

4. HARDWARE REQUIREMENTS 9

4.1 Block diagram 9

4.2 AL6301/AL5100 CHIPSET ARCHITECTURE 10

4.3 IO CONNECTOR PIN DEFINITION 10

4.4 Current Consumption 11

5. DIMENSION INFORMATION 11

5.1 PCB DIMENSION 11

6. Labeling 12

1. Summaries

1.1 UWB RF module applications

This is the UWB module for OEM usage in the application of high speed data transmission. This module is one side component compact module which can be put on the any PCB board. This module is used primarily inside devices as like set-top box, wireless monitor or A/V receiver box for wireless connection of A/V signal and data line as like USB signal.

1.2 Interface signals

This module is based on USB 2.0 interface. Pins of connector have USB and GPIO signals and power. GPIO signals can be programmed for I2C signal line for device control. Power 5V is supplied to the module. In the module, 1.3V, 2.4V DC are made for the circuit and 3.3V is used for I/O part. The power consumption is about 1.2W.

1.3 Module Installation

The mother board which is installed with the UWB module should have 0.8mm pitch WTB parts.

The installation procedure is as follows

Connect the motherboard and UWB using WTB harness and fix it to the case using the hole of the shield can.

2. Cautions

This device uses ultra high frequency radio. Therefore if there's an object like concrete wall or furniture etc, between USB dongle and receiver device, the radio performance will be decreased much. Any obstacle objects should not be between USB dongle and receiver. The operating range is 5~10m and it can be varied according the environment.

3. HARDWARE SPECIFICATIONS

3.1 GENERAL

Wireless circuit compatible with IEEE 802.15.3a standard and provide maximum speeds up to 480 Mbps.

3.2 PRODUCT CHACTERISTICS

URM01 is designed for UWB module product as device side. It provides the fast data transmission between user and UWB module device via wireless network. The device is intended for use in a wide range of system types with extensive communication and connectivity requirements..

Radio technology: Compliance with 802.15.3a standards
Operating frequency: 6.336GHz ~7.920GHz, BG3
Modulation Schemes: Multiband OFDM

Data rate(Mbps)

53.3, 80, 106.7, 160, 200, 320, 400, 480 in BG6.

3.3 ENVIRONMENT

3.3.1 Temperature

Operating Temperature Conditions

The product shall be capable of continuous reliable operation when operating in ambient temperature of 0℃ to +50℃.

Non-Operating Temperature Conditions

Neither subassemblies shall be damaged nor shall the operational performance be degraded when restored to the operating temperature when exposed to storage temperature in the range of -10℃ to +75℃.

3.3.2 Humidity

Operating Humidity Conditions

The product shall be capable of continuous reliable operation when subjected to relative humidity in the range of 10% and 85% non-condensing.

Non-Operating Humidity conditions

The product shall not be damaged nor shall the performance be degraded after exposure to relative humidity ranging from 5% to 90% non-condensing.

4. HARDWARE REQUIREMENTS

4.1 Block diagram

The hardware design of URM01 is based on AL6301/AL5100 reference circuit

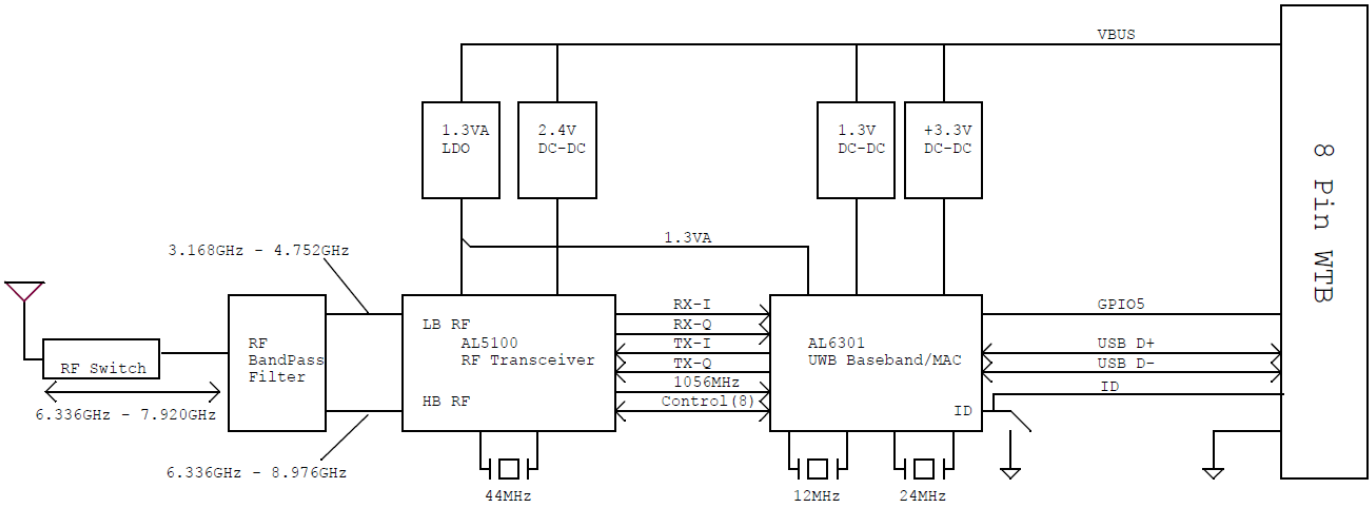

4.2 AL6301/AL5100 CHIPSET ARCHITECTURE

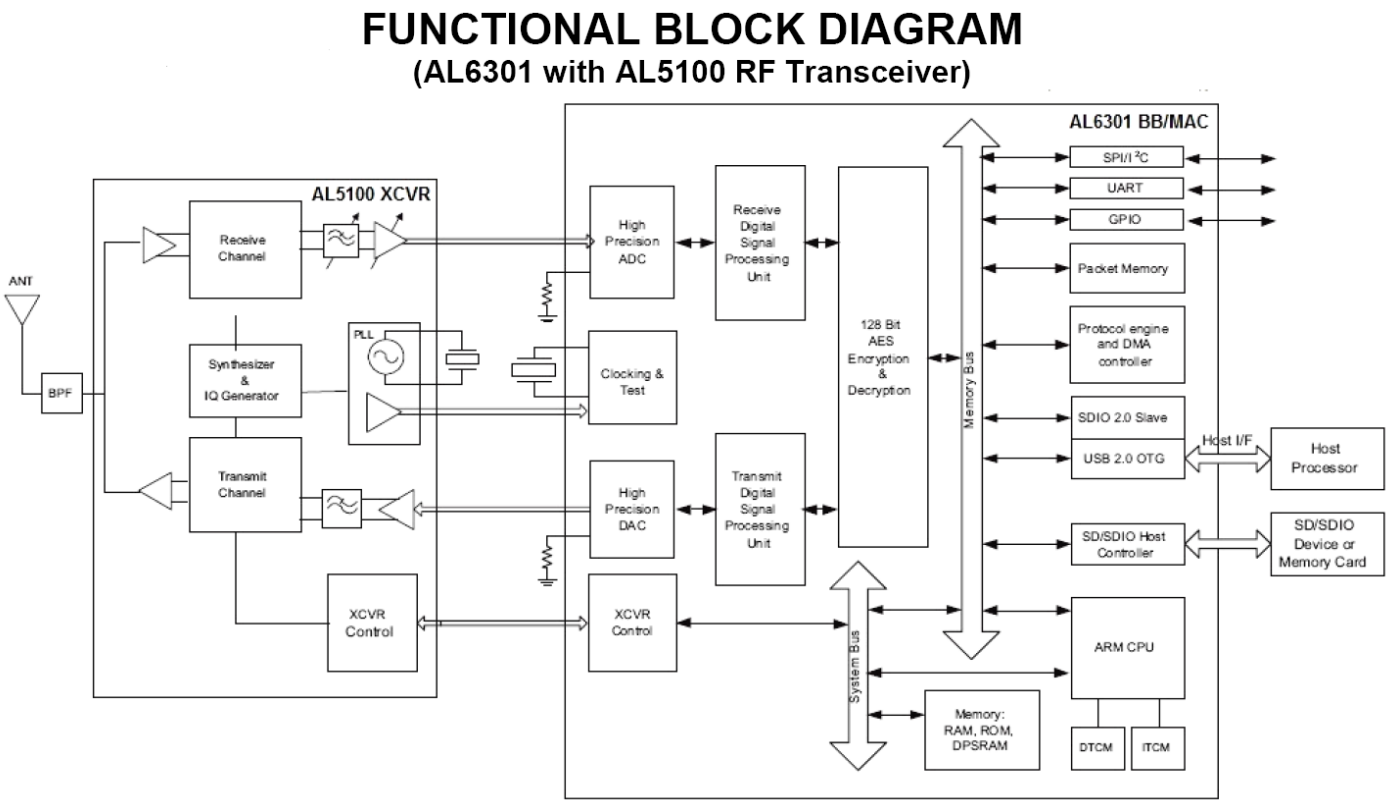

4.3 IO CONNECTOR PIN DEFINITION

PIN	FUNCTION	DESCRIPTION
1	+5V	Main power
2	+5V	Main power
3	DN	USB Data minus signal
4	DP	USB Data plus signal
5	GND	Power Ground
6	GND	Power Ground
7	NC	No Connection
8	USB_ID	USB mode setting ID(Host : high, Device : low)

4.4 Current Consumption

	Maximum Current Consumption (mA)		
Mode	**Stand-by**	**BG6**	
		Transmit	**Receive**
Current	160~280	250	270

5. DIMENSION INFORMATION

5.1 PCB DIMENSION

PCB Dimension (W x L): 41 x 16mm, Thickness 1.0mm ±0.1mm

6. Labeling

Wireless USB Module	
Model	URM01
Manufacturer's name and address	Danbitech Co., Ltd. 120, Daeseong-ro 180beon-gil, Sangdang-gu, Cheongju-si, Chungcheongbuk-do, Korea Tel: +82-70-5129-5712
Applicant's name and address	Osstem Implant Co., Ltd. 2 Floor, B-dong, 51, Mayu-ro 238beon-gil, Siheung-si, Gyeonggi-do, 15079, Republic of Korea Tel.: +82-2-2016-7000
Country of origin	Republic of Korea
European Representative	DEUTSCHE OSSTEM GmbH Mergenthalerallee 35-37, 65760 Eschborn, Germany Tel: +49 (0) 6196 777 55 00 Fax: +49 (0) 6196 777 55 29

FCC MODULAR APPROVAL INFORMATION EXAMPLES for Manual

This device complies with Part 15 of the FCC Rules. Operation is subject to the following two conditions:

(1) This device may not cause harmful interference.

(2) This device must accept any interference received, including interference that may cause undesired operation.

CAUTION: Changes or modifications not expressly approved by the party responsible for compliance could void the user's authority to operate the equipment.

NOTE: This equipment has been tested and found to comply with the limits for a Class B digital device, pursuant to Part 15 of the FCC Rules. These limits are designed to provide reasonable protection against harmful interference in a residential installation. This equipment generates uses and can radiate radio frequency energy and, if not installed and used in accordance with the instructions, may cause harmful interference to radio communications. However, there is no guarantee that interference will not occur in a particular installation. If this equipment does cause harmful interference to radio or television reception, which can be determined by turning the equipment off and on, the user is encouraged to try to correct the interference by one or more of the following measures:

- Reorient or relocate the receiving antenna.
- Increase the separation between the equipment and receiver.
- Connect the equipment into an outlet on a circuit different from that to which the receiver is connected.
- Consult the dealer or an experienced radio/TV technician for help.

FCC Radiation Exposure Statement:

This equipment complies with FCC radiation exposure limits set forth for an uncontrolled environment. This equipment should be installed and operated with minimum distance 20cm between the radiator & your body.

OEM INTEGRATION INSTRUCTIONS:

This device is intended only for OEM integrators under the following conditions:

The module must be installed in the host equipment such that 20 cm is maintained between the antenna and users, and the transmitter module may not be co-located with any other transmitter or antenna. The module shall be only used with the internal on-board antenna that has been originally tested and certified with this module. External antennas are not supported. As long as these 3 conditions above are met, further transmitter test will not be required.

However, the OEM integrator is still responsible for testing their end-product for any additional compliance requirements required with this module installed (for example, digital device emissions, PC peripheral requirements, etc.). The end-product may need Verification testing, Declaration of Conformity testing, a Permissive Class II Change or new Certification. Please involve a FCC certification specialist in order to determine what will be exactly applicable for the end-product.

Validity of using the module certification:

In the event that these conditions cannot be met (for example certain laptop configurations or co-location with another transmitter), then the FCC authorization for this module in combination with the host equipment is no longer considered valid and the FCC ID of the module cannot be used on the final product. In these circumstances, the OEM integrator will be responsible for re-evaluating the end product (including the transmitter) and obtaining a separate FCC authorization. In such cases, please involve a FCC certification specialist in order to determine if a Permissive Class II Change or new Certification is required.

Upgrade Firmware:

The software provided for firmware upgrade will not be capable to affect any RF parameters as certified for the FCC for this module, in order to prevent compliance issues.

End product labeling:

This transmitter module is authorized only for use in device where the antenna may be installed such that 20 cm may be maintained between the antenna and users. The final end product must be labeled in a visible area with the following: “Contains FCC ID: 2ARZCURM01”.

Information that must be placed in the end user manual:

The OEM integrator has to be aware not to provide information to the end user regarding how to install or remove this RF module in the user's manual of the end product which integrates this module. The end user manual shall include all required regulatory information/warning as show in this manual.