Compliance Information

FCC Information
This device complies with Part 15 of the FCC Rules.

Caution: Any changes or modifications not expressly approved could void the user's authority to operate the equipment.

Note: This equipment has been tested and found to comply with the limits for a Class B digital device, pursuant to part 15 of the FCC Rules. These limits are designed to provide reasonable protection against harmful interference in a residential installation. This equipment generates, uses and can radiate radio frequency energy and, if not installed and used in accordance with the instructions, may cause harmful interference to radio communications. However, there is no guarantee that interference will not occur in a particular installation. If this equipment does cause harmful interference to radio or television reception, which can be determined by turning the equipment off and on, the user is encouraged to try to correct the interference by one or more of the following measures:
-- Reorient or relocate the receiving antenna.
-- Increase the separation between the equipment and receiver.
-- Connect the equipment into an outlet on a circuit different from that to which the receiver is connected.
-- Consult the dealer or an experienced radio/TV technician for help.

Radiation Exposure Information
This device has been evaluated to meet general RF exposure requirements. The device can be used in portable exposure conditions without restriction.

WARNING Li-ion Battery Inside
This product is fitted with a Li-ion battery. Do not damage, open, or dismantle the battery and do not use it in damp and/or corrosive conditions. Use only with compatible chargers. Never dispose of batteries in a fire, and never expose them to high temperatures. Do not expose the product to temperatures exceeding 60°C (140°F).

RECYCLE
RBRC
Li-ion
1.800.822.8837

Rating Label Definitions

Direct current symbol.

This symbol signifies the product must not be discarded as household waste, and should be delivered to an appropriate collection facility for recycling. Proper disposal and recycling helps protect natural resources, human health and the environment.

BC This symbol signifies and declares that this equipment has battery charging which complies with California CEC and energy efficiency.

Bluetooth This symbol signifies that this is a wireless device powered by Bluetooth® technology. The Bluetooth® word mark and logos are registered trademarks owned by Bluetooth SIG, Inc. and used under license.

Warranty Information

Territory: United States/Canada

LIMITED WARRANTY TO ORIGINAL CONSUMER
This product (including any accessories included in the original packaging) as supplied and distributed new by an authorized retailer is warranted by Southern Telecom, Inc. to the original consumer purchaser against defects in materials and workmanship ("Warranty") as follows:

To obtain warranty service:
- Visit our website at **www.southerntelecom.com**
- Click on ***Product Support***
- Select the ***Brand*** of your device
- Select ***Service Request*** and fill out the form to begin your inquiry

Your product will be repaired or replaced, at our option, for the same or similar model of equal value if examination by the service center determines this product is defective. Products received damaged as a result of shipping will require you to file a claim with the carrier.

Warranty service not provided
This warranty does not cover damage resulting from accident, misuse, abuse, improper installation or operation, lack of reasonable care, unauthorized modification including software modifications such as the installation of custom firmware. This warranty is voided in the event any unauthorized person opens, alters or repairs this product. All products being returned to the authorized service center for repair must be suitably packaged.

NO WARRANTIES, WHETHER EXPRESS OR IMPLIED, INCLUDING, BUT NOT LIMITED TO, ANY IMPLIED WARRANTIES OF MERCHANTABILITY OR FITNESS FOR A PARTICULAR PURPOSE, OTHER THAN THOSE EXPRESSLY DESCRIBED ABOVE SHALL APPLY. DISTRIBUTOR FURTHER DISCLAIMS ALL WARRANTIES AFTER THE EXPRESS WARRANTY PERIOD STATED ABOVE. NO OTHER EXPRESS WARRANTY OR GUARANTY GIVEN BY ANY PERSON, FIRM OR ENTITY WITH RESPECT TO THE PRODUCT SHALL BE BINDING ON DISTRIBUTOR. REPAIR, REPLACEMENT, OR REFUND OF THE ORIGINAL PURCHASE PRICE - AT DISTRIBUTOR'S SOLE DISCRETION - ARE THE EXCLUSIVE REMEDIES OF THE CONSUMER. IN NO EVENT WILL DISTRIBUTOR OR ITS MANUFACTURERS BE LIABLE FOR ANY INCIDENTAL, DIRECT, INDIRECT, SPECIAL, PUNITIVE OR CONSEQUENTIAL DAMAGES (SUCH AS, BUT NOT LIMITED TO, DAMAGES FOR LOSS OF PROFITS, BUSINESS, SAVINGS, DATA OR RECORDS) CAUSED BY THE USE, MISUSE OR INABILITY TO USE THE PRODUCT. EXCEPT AS STATED HEREIN, NO OTHER WARRANTIES SHALL APPLY. NOTWITHSTANDING THE FOREGOING, CONSUMER'S RECOVERY AGAINST DISTRIBUTOR SHALL NOT EXCEED THE PURCHASE PRICE OF THE PRODUCT SOLD BY DISTRIBUTOR. THIS WARRANTY SHALL NOT EXTEND TO ANYONE OTHER THAN THE ORIGINAL CONSUMER WHO PURCHASED THE PRODUCT AND IS NOT TRANSFERABLE.

Some countries, states or provinces do not allow the exclusion or limitation of incidental or consequential damages or allow limitations on warranties, so limitation or exclusions may not apply to you. This warranty gives you specific legal rights, and you may have other rights that vary from state to state or province to province. Contact your authorized retailer to determine if another warranty applies.

2019 Sharper Image® name and logo are registered trademarks. Manufactured, marketed, and distributed under license by Southern Telecom, Inc. Brooklyn, NY 11220. © Sharper Image. All Rights Reserved.

All product names, trademarks, and registered trademarks are property of their respective owners. All company, product, and service names used in this document are for identification purposes only. Use of these names, trademarks, and brands does not imply endorsement.

Printed in China
Designed in USA
v2. 03-2019

SHARPER IMAGE®

SHARPER IMAGE®

Wireless Sound Bar

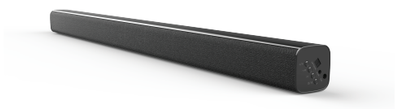

Instruction Manual

SBT2019

Before You Begin...

Caution

- **READ THIS MANUAL AND SAVE FOR FUTURE REFERENCE**
- THIS IS NOT A TOY, **please keep away from children**
- Do NOT submerge in water
- Keep away from extreme heat and/or humidity
- Do not open this product or attempt to repair the unit yourself should it not be working.
- Low power may cause poor Bluetooth connection or sound distortion
- Only power this device with its suppiled power adapter

Questions & Customer Support

For any issues concerning this product, please visit our website at **SouthernTelecom.com** and click on **Product Support**.

In the Box

- SBT2019 - **Wireless Speaker** (x1)
- 5V/1.5A Power Adapter (x1)
- RCA-3.5 mm AUX Cable (x1)
- Remote Control (x1)
- Instruction Manual (x1)

Location of Controls

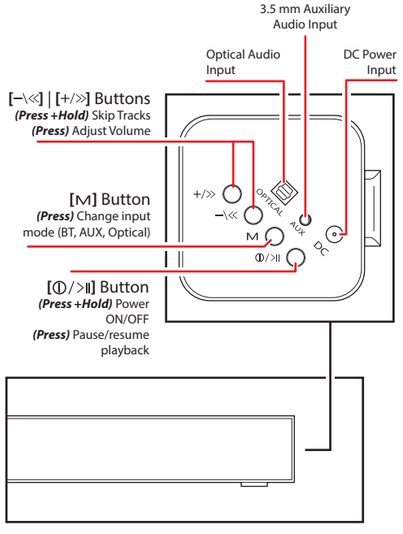

Getting Started

Wall Mounting the Speaker

1. Remove the speaker and its contents from packaging.
2. Using a pencil, mark two spots on a wall measuring XXXXX inches apart.
3. If installing to a wooden surface, drive or drill a mounting screw into the wall at each marked location. If installing to drywall or a brick surface, you may need to install plastic anchors to properly secure the mounting screws.
4. Place and hang the speaker from its mounting holes on the back onto the installed mounting screws.

Powering the Speaker

Insert the pin of the supplied 5V/1.5A power adapter into the DC power input on the side of the speaker. Plug the adapter into an electrical outlet.

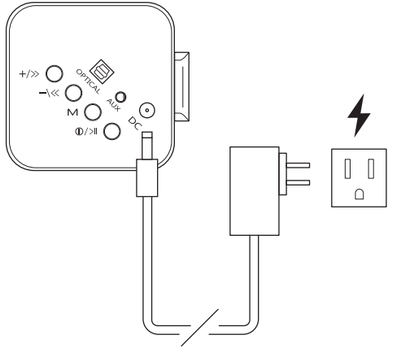

Powering ON/OFF

- Press and hold the [⏻/>I] button on the speaker to power ON. A tone will be heard and the speaker will automatically enter Bluetooth pairing mode. The speaker will automatically re-pair to any nearby, previously-paired devices that have Bluetooth enabled.
- Press and hold the [⏻/>II] button again to power OFF.

Changing Input Modes

- Press the [M] button to change between Bluetooth mode, 3.5 mm AUX, and optical audio inputs.

Note: When plugging in a 3.5 mm or optical cable to the speaker, the speaker will automatically switch to AUX mode.

Bluetooth Pairing

1. Power the speaker ON. A tone will be heard and the LED indicator will ***quickly flash BLUE***.
2. Set your mobile device to search for Bluetooth devices. When it appears, select **SBT2019** from the list of found devices.
3. After a successful pairing, a tone will be heard and the LED indicator will turn ***solid GREEN***.

Using the 3.5 mm AUX Input

To use the speaker as a wired device, insert the 3.5 mm connector of the supplied AUX cable into the 3.5 mm auxiliary audio input jack. Insert the RCA connectors into the audio outputs of your media-playing device.

Note: Typically, RCA connectors are color-coded with Red being for the right audio channel and white being for the left audio channel.

The LED indicator will ***turn GREEN*** when the AUX input is in use. While connected, playback is controlled via the connected device. Volume can be controlled with the speaker, remote control or the connected device.

Using the Optical Input

Insert one connector of an optical audio cable *(not included)* into the optical audio input on the side of the speaker. Insert the other connector into the optical output of your media-playing device.

The LED indicator will ***turn GREEN*** when the optical input is in use. While connected, playback is controlled via the connected device. Volume can be controlled with the speaker, remote control or the connected device.

Playing Music

To enjoy music on your speaker, make sure that the speaker is properly paired to your Bluetooth-enabled device or connected via the 3.5 mm auxiliary or optical audio input jack.

Controlling Playback & Volume (Bluetooth Only)

- Press the [⏻/>II] button to pause/resume media playback.
- Press the [−\≪] and [+/≫] buttons to skip tracks.
- Press and hold the [−\≪] and [+/≫] buttons to adjust volume.

Using the Remote Control
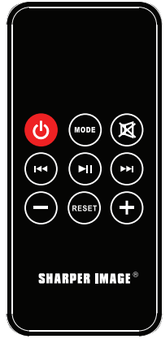
- [⏻] Button: Enter/leave standby mode
- [MODE] Button: Change input mode
- [🔇] Button: Mute/unmute volume
- [⏮] Button: Skip to previous track
- [⏯] Button: Pause/resume playback
- [⏭] Button: Skip to next track
- [−] Button: Decrease volume
- [RESET] Button: Reset to factory settings
- [+] Button: Increase volume