DM563U0

User Reference Guide

Document Ref. Number: RKH-02900009

Version: V1.0.1

Build Revision

Version	Modified	Modifier	Approver	Date	Department
V1.0.0	Initial Version	刘双霖	Robo	2018-12-27	Hardware Development
V1.0.1	Improve power source & operating temperature threshold	刘双霖	Robo	2019-03-15	Hardware Development

Table of Contents

Build Revision I

1. Product Introduction 1

1.1 Overview 1

1.2 Product Specification 1

1.3 Application Block Diagram 2

2. RF Parameters 3

3. PCB design and packaging 4

1. Product Introduction

1.1Overview

DM563U0 is a Wifi dedicated module based on QUALCOMM QCA9563+QCA9880 with 128MB DDR2 RAM & 16MB SPI Flash. It complies with IEEE802.11a/n/ac wireless network protocol.

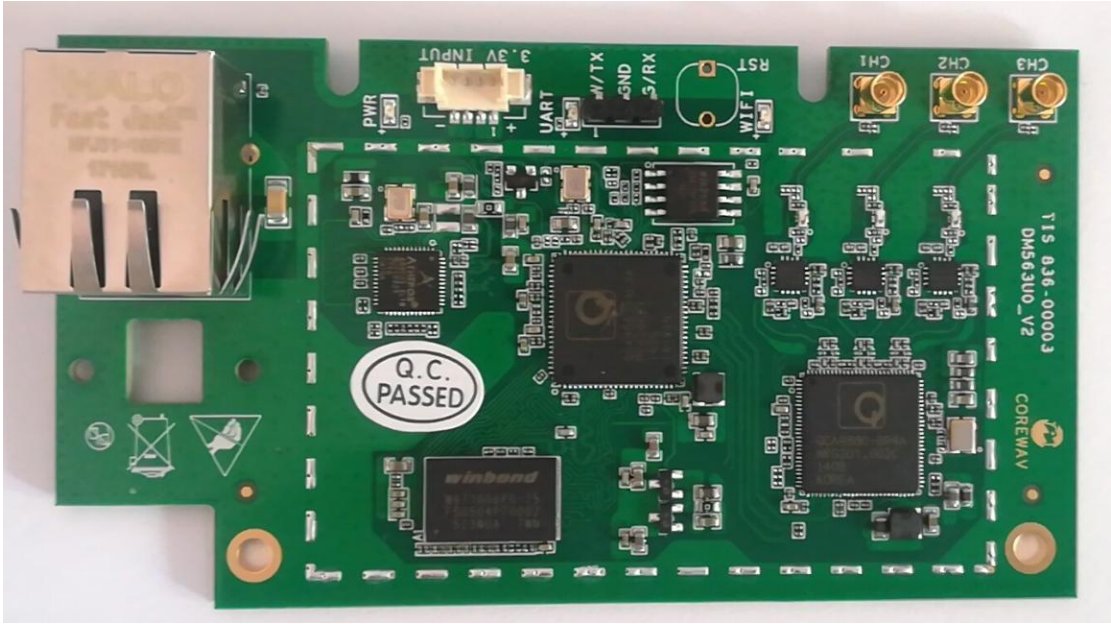

1.2Product Specification

Table 1 Product Specifications

CPU Model	QCA9563+QCA9880
RAM	128MB DDR2
Flash	16M SPI
Input Voltage	3.3V DC
Operating Temperature	-25℃~+55℃
Operating Humidity	5%-95%（Non-Condensing）

1.3Application Block Diagram

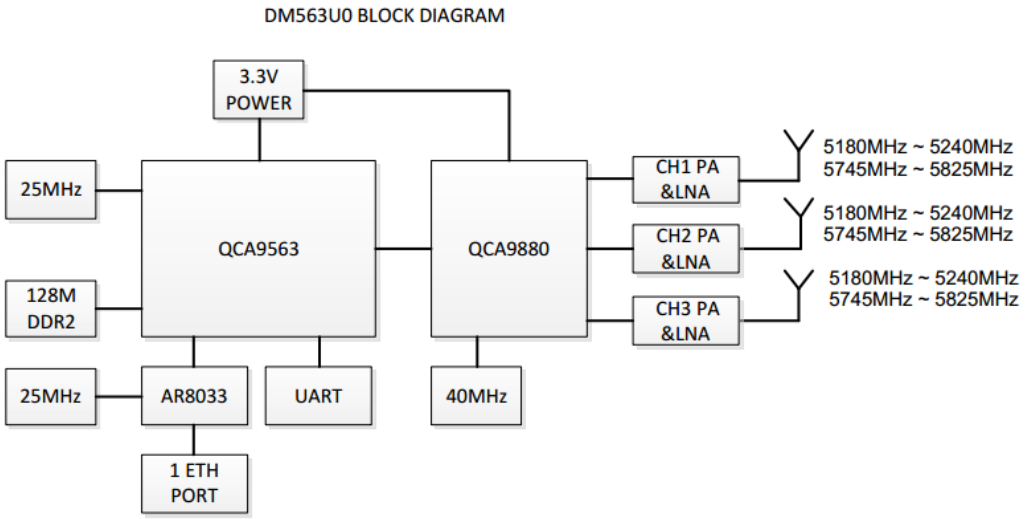

2. RF Parameters

DM563U0 supports all modulation modes and rates under 802.11a/n/ac. The transmission parameters are shown in **Operation Description**, and the receiver parameters are shown in below table.

Receiver Sensitivity Parameter Table[1]

Modulation	Data Rates	Receiver Sensitivity (dbm)
5GHz 802.11a	6Mbps	-94
	9Mbps	-94
	12Mbps	-92
	18Mbps	-91
	24Mbps	-90
	36Mbps	-86
	48Mbps	-83
	54Mbps	-80
5GHz 802.11n/ac VHT20	MCS0	-93
	MCS1	-90
	MCS2	-87
	MCS3	-83
	MCS4	-80
	MCS5	-77
	MCS6	-74
	MCS7	-73
	MCS8	-71
5GHz 802.11n/ac VHT40	MCS0	-90
	MCS1	-88
	MCS2	-85
	MCS3	-82
	MCS4	-80
	MCS5	-75
	MCS6	-73
	MCS7	-73
	MCS8	-70
	MCS9	-68
5GHz 802.11ac VHT80	MCS0	-89
	MCS1	-87
	MCS2	-85
	MCS3	-83
	MCS4	-80

	MCS5	-78
	MCS6	-75
	MCS7	-72
	MCS8	-70
	MCS9	-68

Note：

1) Tolerance of ±2dbm

3. PCB design and packaging

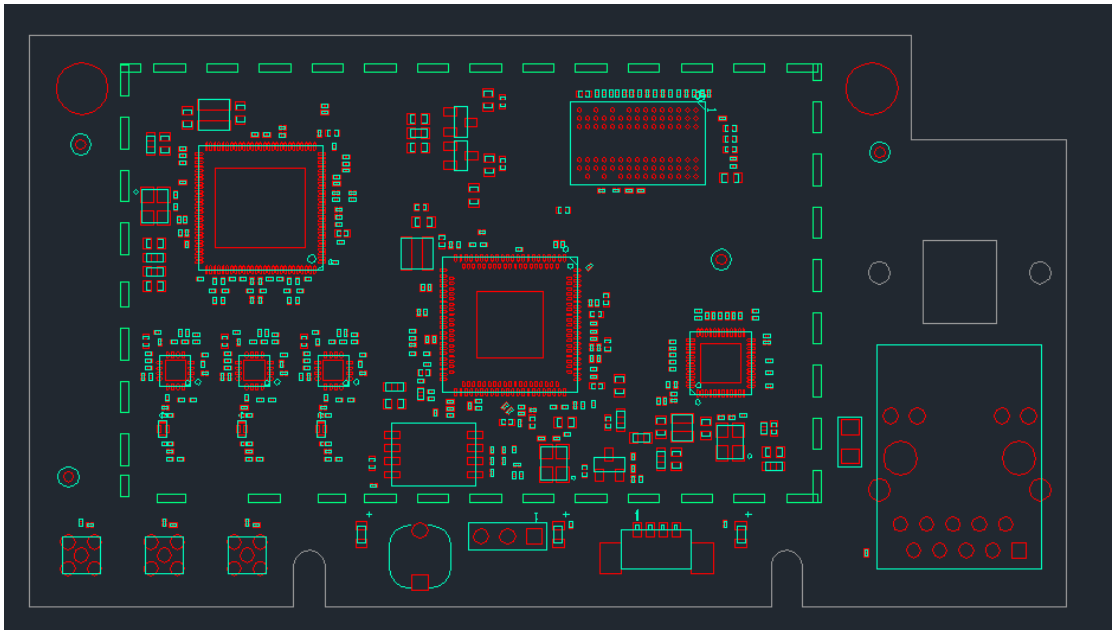

Federal Communications Commission (FCC) Interference Statement

This equipment has been tested and found to comply with the limits for a Class B digital device, pursuant to Part15 of the FCC Rules.

These limits are designed to provide reasonable protection against harmful interference in a residential installation. This equipment generates, uses and can radiate radio frequency energy and, if not installed and used in accordance with the instructions, may cause harmful interference to radio communications.

However, there is no guarantee that interference will not occur in a particular installation. If this equipment does cause harmful interference to radio or television reception, which can be determined by turning the equipment off and on, the user is encouraged to try to correct the interference by one of the following measures:

- Reorient or relocate the receiving antenna.
- Increase the separation between the equipment and receiver.
- Connect the equipment into an outlet on a circuit different from that to which the receiver is connected.
- Consult the dealer or an experienced radio/TV technician for help.

This device complies with Part 15 of the FCC Rules. Operation is subject to the following two conditions:
(1) This device may not cause harmful interference, and (2) this device must accept any interference received, including interference that may cause undesired operation.
FCC Caution: Any changes or modifications not expressly approved by the party responsible for compliance could void the user's authority to operate this equipment.

RF exposure warning

This equipment complies with FCC radiation exposure limits set forth for an uncontrolled environment.

This product may not be collocated or operated in conjunction with any other antenna or transmitter

This equipment must be installed and operated in accordance with provided instructions and the antenna(s) used for this transmitter must be installed to provide a separation distance of at least 20 cm from all persons and must not be collocated or operating in conjunction with any other antenna or transmitter.

OEM Integration Instructions：

This device is intended only for OEM integrators under the following conditions:

The module can be used to installation in other host. The antenna must be installed such that 20 cm is maintained between the antenna and users, and the transmitter module may not be co-located with any other transmit or antenna. The module shall be only used with the integral antenna(s) that has been originally tested and certified with this module. As long as 3 conditions above are met, further transmitter test will not be required. However, the OEM integrator is still responsible for testing their end-product for any additional compliance requirement with this module installed (for example, digital device emission, PC peripheral requirements, etc.)

IMPORTANT NOTE：

In the event that these conditions cannot be met (for example certain laptop configuration or co-location with another transmitter), then the FCC authorization for this module in combination with the host equipment is no longer considered valid and the FCC ID of the module cannot be used on the final product. In these and

circumstance, the OEM integrator will be responsible for re-evaluating. The end product (including the transmitter) and obtaining a separate FCC authorization. The final end product must be labeled in a visible area with the following:

"**Contains Transmitter Module FCC ID: 2AS2S-DM563U0**

or **Contains FCC ID: 2AS2S-DM563U0**".

Antenna Specification:

Antenna Type	Frequency Band (MHz)	Tx Paths	Max Antenna Gain (dBi)	CDD Directional Gain (dBi)	
				For Power	For PSD
External Antenna	5150 ~ 5250 5725 ~ 5850	3	2.5	2.5	7.27

Note:

1. 802.11a support single transmission only.
2. The EUT supports Cyclic Delay Diversity (CDD) technology and doesn't support Beam-forming technology, and CDD signals are correlated.