MX530VX

Dual Band 2GHz&5GHz 3x3 MIMO

802.11ac Mini PCIE Wi-Fi Module

Key Features

- Designed for Dual Band Wireless Access Points
- Qualcomm Atheros QCA9880
- 2.4GHz max 21dBm & 5GHz max 20dBm output power (per chain)
- IEEE 802.11ac compliant & backward compatible with 802.11a/b/g/n/ac
- 3x3 MIMO Technology, up to 1300Mbps
- Mini PCI Express edge connector
- Supports Spatial Multiplexing, Cyclic-Delay Diversity (CDD), Low-Density Parity Check (LDPC) Codes, Maximal Ratio Combining (MRC), Space Time Block Code (STBC)
- Supports IEEE 802.11d, e, h, i, k, r, v time stamp, and w standards
- Supports Dynamic Frequency Selection (DFS)
- Cards are individually calibrated for Quality Assurance

Nanjing Maxon O.E. Tech. CO., Ltd
TEL: 025-86380932
FAX: 025-86644313
Mail: info@maxonc.com

Connector Map

Mechanical Dimensions

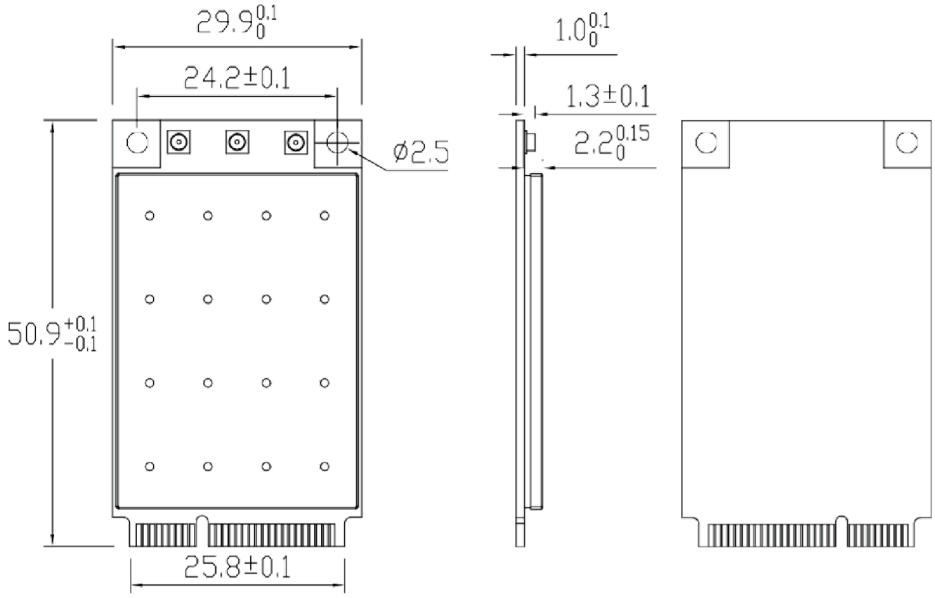

* List of applicable FCC rules:
2.2FCC Part15 Subpart C, Section 15.247,15.407
2.3Specific operational use conditions
Sufficient Power Supply.
Wi-Fi Module is a mini-PCIe module and would be attached to the mini-PCIe interface of the main device. As the transmitter power would require adequate power supply to the module for good performance, it is important to have at least 3.3V and 1A supplying to the module.
The information in this article, including the URL for reference, if there is any change, without prior notice. Documents are provided by the current version without any guaranteed responsibility, including merchantability, suitable for any particular purpose or non-infringement guarantees, and any guarantees presented by any proposal, specification, or sample mentioned elsewhere. This document has no responsibility, including the use of the information within this document produced by the infringement of any patent rights. This document in this, by estoppel or otherwise, grant any intellectual property licensing, whether express or implied license.
2.4 Limited module procedures
Not applicable. The module is a Single module and complies with the requirement of FCC Part 15.212.
2.5 Trace antenna designs
Not applicable. The module has its own antenna, and doesn't need a host's printed board microstrip trace antenna etc.

Nanjing Maxon O.E. Tech. CO., Ltd
TEL: 025-86380932
FAX: 025-86644313
Mail: info@maxonc.com

2.6 RF exposure considerations
This equipment complies with FCC radiation exposure limits set forth for an uncontrolled environment. This equipment should be installed and operated with minimum distance 20cm between the radiator & your body.
2.7 Antennas
Antenna Specification are as follows:
Type: FPC antenna
Gain: 2 dBi
This device is intended only for host manufacturers under the following conditions:
The transmitter module may not be co-located with any other transmitter or antenna;
The module shall be only used with the External antenna(s) that has been originally tested and certified with this module. The antenna must be either permanently attached or employ a 'unique'antenna coupler.
2.8 Label and compliance information
Host product manufacturers need to provide a physical or e-label stating "Contains FCC ID:2AS2S-MX530VX
with their finished product.
2.9 Information on test modes and additional testing requirements Operation Frequency:
WIFI 2.4G:
2412~2462MHz for 802.11b/g/n(HT20)
2422~2452MHz for 802.11n(HT40) WIFI 5.2G: 5180~5240MHz
WIFI 5.8G: 5745~5825MHz Number of Channel:
WIFI 2.4G:
11 Channels for 802.11b/g/n(HT20)
7 Channels for 802.11n(HT40)
WIFI 5.2G:
4 Channels for 802.11a/n(HT20)/ac(HT20)
2 Channels for 802.11n(HT40)/ac(HT40)
1 Channels for 802.11ac(HT80)
WIFI 5.8G:
5 Channels for 802.11a/n(HT20)/ac(HT20)
2 Channels for 802.11n(HT40)/ac(HT40)
1 Channels for 802.11ac(HT80)
Modulation:
WIFI 2.4G: CCK, DQPSK, DBPSK for DSSS; 64QAM, 16QAM, QPSK, BPSK for OFDM
WIFI 5G: OFDM with BPSK/QPSK/16QAM/64QAM/256QAM
Host manufacturer must perfom test of radiated & conducted emission and spurious emission, etc according to the actual test modes for a stand-alone modular transmitter in a host, as well as for multiple simultaneously transmitting modules or other transmitters in a host product.
Only when all the test results of test modes comply with FCC requirements, then the end product can be sold legally.
2.10All the mentioned brand names, trademarks and registered trademarks presented in this document are the property of their respective owners, and hereby declare.
FCC regulatory information
This device complies with Part 15 of the FCC Rules. Operation is subjected to the following two conditions: (1) this device may not cause harmful interference, and (2) this device must accept any interference received, including interference that may cause undesired operation.
Warning: Changes or modifications not expressly approved by the party responsible for compliance could void the user's authority to operate the equipment.

Nanjing Maxon O.E. Tech. CO., Ltd
TEL: 025-86380932
FAX: 025-86644313
Mail: info@maxonc.com