2 electrode free chlorine sensor
Type CAA320X Co/Gold version
Type CAA330X Co/Platinum version

Installations and commissioning instructions

SYCLOPE
Electronique

Reference: DOC0514

Rev :1.0

General information:

SYCLOPE Electronique 2020® Manual of 06/04/2020 Rev: 1.0

Free chlorine sensor

Installation and commissioning instructions (Ref: DOC514)

Editor:

SYCLOPE Electronique S.A.S.
Z.I. Aéropole Pyrénées
Rue du Bruscos
64 230 SAUVAGNON - France –
Tel: +33 559 337 036
Fax: +33 559 337 037
Email: syclope@syclope.fr
Internet: http://www.syclope.fr

© 2020 by SYCLOPE Electronique S.A.S.
Subject to modifications

Content

I. Generality ... 4

1) Use of the document ... 4
2) Symbols and signs ... 4
3) Storage and transport ... 5
4) Packaging ... 5
5) Warranty ... 5
6) FCC conformity ... 6

II. Safety and environmental instructions ... 7

1) Use of the equipment ... 7
2) User obligations ... 7
3) Risk prevention ... 7
4) Probe rating plate identification Cu/Au CAA320X ... 8
5) Probe rating plate identification Cu/Pt CAA330X ... 9
6) FCC conformity ... 10
7) Disposal and conformity ... 11

III. Technical specifications ... 12

1) Technical specifications ... 12
2) Parameters and Measurement scale ... 12

IV. Installation conditions ... 13

V. Mechanical and hydraulic installation ... 13

1) Probe overview ... 13
2) Installation in the probe housing ... 14

VI. Electrical connections ... 16

1) Electrical connections ... 16
2) Analog power and output operational connections ... 16

VII. Calibration ... 17

1) Calibration of the sensor slope ... 17
2) Zero-point calibration (if required) ... 17
3) Use of the gain multiplier switch ... 17

VIII. Maintenance ... 18

1) Disassembly the probe of the measuring chamber ... 18
2) Change of glass beads ... 18
3) Change of the copper counter-electrode ... 19

IX. Maintenance kit ... 20

X. Maintenance ... 21

I. Generality

1) Use of the document

Please read carefully the entire document before starting the installation and the commissioning of the controller device, in order to ensure the safety of swimmers, users and equipment's.

The information provided in this document must be strictly observed. **SYCLOPE Electronique S.A.S.** declines all responsibility in cases where failure to comply with the instructions of this documents.

The following symbols and pictograms will be used to facilitate reading and understanding of these instructions.

- ● Information
- ► Action to do
- ➢ Element of a list or enumeration

2) Symbols and signs

⎓ Identification of a continuous volage or current

The manual must be consulted before using the product.

Risk of equipment malfunction or deterioration

Note or specific information.

Recyclable element.

3) Storage and transport

It is important to store and to transport the electrode free chlorine sensor in its original packaging in order to minimize risk of damage.
Furthermore, the package must be stored in an environment that is protected against humidity and exposure to chemical products.

Environmental conditions for transport and storage:

Temperature: -10 °C à 70 °C
Air humidity: Maximum of 90% with no condensation

4) Packaging

The sensors are delivered without any cables or probe mounting kit.

The connecting cable used must be adapted to the cable gland PG7 in order to meet the protection index IP65.

Is included in the packaging:

- ✓ Chlorine sensor
- ✓ Kit of glass beads doped with cobalt
- ✓ The commissioning Instructions

5) Warranty

The warranty is provided according to the terms of our general conditions of sale and delivery as long as the following conditions are met:

- Use of the equipment according to the instructions of this notice
- No modifications of the equipment which may modify its behaviour and no incorrect manipulation
- Respect for the electrical safety conditions

Consumable material is no longer covered by warranty as soon as it's put into service.

6) FCC conformity

The device complies with Part 15 of the FCC Rules.
Operation is subject to the following two conditions:
(1) this device may not cause harmful interference (2) this device must accept any interference received, including interference that may cause undesired operation FCC Regulations state that unauthorized changes or modifications to this equipment may void the user's authority to operate it.

This equipment has been tested and found to comply with the limits for a Class B digital device, pursuant to Part 15 of the FCC Rules. These limits are designed to provide reasonable protection against harmful interference in a residential installation. This equipment generates, uses, and can radiate radio frequency energy and, if not installed and used in accordance with the instructions, may cause harmful interference to radio communications. However, there is no guarantee that interference will not occur in a particular installation.

If this equipment does cause harmful interference to radio or television reception, which can be determined by turning the equipment off and on, the user is encouraged to try and correct the interference by one or more of the following measures:

- Reorient or relocate the receiving antenna.
- Increase the separation between the equipment and receiver.
- Connect this equipment into an outlet on a circuit different from that to which the receiver is connected.
- Consult the dealer or an experienced radio/TV technician for help.

Changes and modifications not expressly approved by the manufacturer could void the user's authority to operate this equipment.

Remark: To ensure compliance with the FCC regulations on electromagnetic interference for a class B device, use cables properly shielded and connected to the ground as recommended in this manual. The use of a cable that is not properly shielded or earthed for risk of violating the FCC rules.

II. Safety and environmental instructions

Please:

- Read this manual carefully before the unpacking, the installing or the commissioning of this equipment
- Take into account all the hazards and of recommended precautionary measures

The failure to respect these procedures can result in serious injury to users or damaging the device.

1) Use of the equipment

The CAA320X/CAA330X series Free Chlorine sensors are designed to measure Free Chlorine in potable, sanitary, swimming pool or process water in which the chlorine measurement must be controlled. They are not selective and can be used to measure Brome or other forms of oxydants (Contact us). They are particularly suitable for measuring chlorine generated by salt electrolysis (salt water) in the Copper/Gold version and for pressure operation when the flow rate on the electrodes is perfectly controlled. They are dependent on variation of flow, pH and stabilizer.

Any different use is considered non-compliant and should be prohibited. SYCLOPE Electronique S.A.S. will under no circumstances assume the liability and damages resulting therefrom.

Any use of interfaces that do not comply with the technical specifications defined in this manual should also be prohibited.

2) User obligations

The user undertakes not to allow its employees to work with the equipment described in this manual unless they:

- Are aware of the fundamental instructions relating to work safety and prevention of accidents
- Are trained in the use of the device and its environment
- Have read and understood these instructions, warnings and manipulation rules.

3) Risk prevention

The installation and connection of the probes should be only performed by specialized personnel and qualified for this task.
The installation must comply with the current safety standards and instructions!

Before powering on the probe, always turn of the power to the measuring and viewing device!
Never open the probe when it is powered on!
Maintenance operations and repairs should be only performed by trained and specialized personnel!

Be sure to choose the location of the probe according to the environment!
Probe must no be installed in a hazardous environment.
Must be installed away from direct sunlight, water splashes or chemicals, in a dry, ventilated area isolated from corrosive vapours. It can be installed in domestic or residential and industrial premises.

All input/output connections are connected to very low safety voltages. Any other higher voltage is prohibited and dangerous for the user and equipment.

Make sure that the probe used with the device matches the measured and used quantities. Refer to the individual technical instructions for each probe. In case of doubt, immediately contact our technical service or your authorized installer.

Probes are sensitive and have consumable parts. They must be monitored, maintained and calibrated regularly using specific reference products not supplied with the equipment. In the event of a defect, a potential risk of excess chemical injection may be identified. In case of doubt, a maintenance contract must be made with your installer or failing that with your technical services. Contact your authorised installer or our sales department for more information.

4) Probe rating plate identification Cu/Au CAA320X

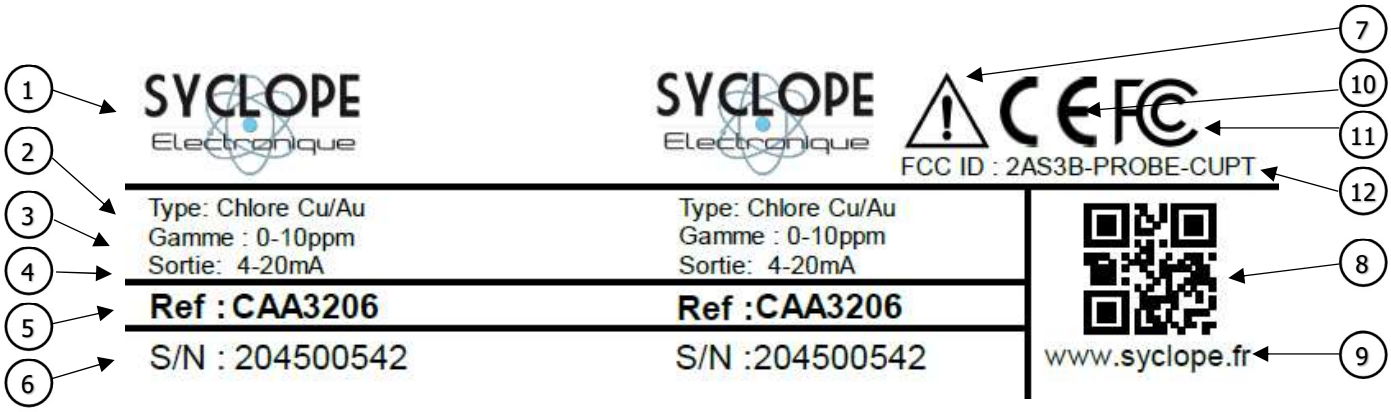

1	Manufacturer's label	9	Identification of the manufacturer
2	Model of the product	10	CE approved
3	Measuring range	11	Conformity with the FCC part 15 Class B
4	Range of current	12	FCC ID
5	Reference of the product		
6	Serial number		
7	Particular risks. Read the manual		
8	QR code		

5 Reference of the product	3 Measuring range
CAA3205	Chlorine Cu/Au 0 – 2 ppm
CAA3206	Chlorine Cu/Au 0 – 10 ppm

5) Probe rating plate identification Cu/Pt CAA330X

1	Manufacturer's label	9	Identification of the manufacturer
2	Model of the product	10	CE approved
3	Measuring range	11	Conformity with the FCC part 15 Class B
4	Range of current	12	FCC ID
5	Reference of the product		
6	Serial number		
7	Particular risks. Read the manual		
8	QR code		

5 Reference of the product	3 Measuring range
CAA3305	Chlore Cu/Pt 0 – 2 ppm
CAA3306	Chlore Cu/Pt 0 – 10 ppm

6) FCC conformity

The Sensor complies with Part 15 of the FCC Rules.
Operation is subject to the following two conditions:
(1) this device may not cause harmful interference (2) this device must accept any interference received, including interference that may cause undesired operation FCC Regulations state that unauthorized changes or modifications to this equipment may void the user's authority to operate it.

This equipment has been tested and found to comply with the limits for a Class B digital device, pursuant to Part 15 of the FCC Rules. These limits are designed to provide reasonable protection against harmful interference in a residential installation. This equipment generates, uses, and can radiate radio frequency energy and, if not installed and used in accordance with the instructions, may cause harmful interference to radio communications. However, there is no guarantee that interference will not occur in a particular installation.

If this equipment does cause harmful interference to radio or television reception, which can be determined by turning the equipment off and on, the user is encouraged to try and correct the interference by one or more of the following measures:

- Reorient or relocate the receiving antenna.
- Increase the separation between the equipment and receiver.
- Connect this equipment into an outlet on a circuit different from that to which the receiver is connected.
- Consult the dealer or an experienced radio/TV technician for help.

Changes and modifications not expressly approved by the manufacturer could void the user's authority to operate this equipment.

Remark: To ensure compliance with the FCC regulations on electromagnetic interference for a class B device, use cables properly shielded and connected to the ground as recommended in this manual. The use of a cable that is not properly shielded or earthed for risk of violating the FCC rules.

7) Disposal and conformity

The recyclable packaging of the probe equipment must be disposed of according to current regulations.

Elements such as paper, cardboard, plastic or any other recyclable elements must be taken to a suitable sorting center.

DEEE: According to European directive 2012/19/EC, this symbol means that as of 4 July 2012 electrical appliances cannot be thrown out together with household or industrial waste. According to current regulations, consumers within the European Union are required, as of this date, to return their used devices to the manufacturer, who will take care of disposing them at no extra expense.

RoHs2: According to European directive 2011/65/EC, this symbol means that the probe is designed in compliance with the restrictions on hazardous substances.

CE: According to low-voltage directive (2014/35/UE) and the electromagnetic compatibility directive (2014/30/UE), this symbol means that the device has been designed in compliance with the previously cited directives.

FCC: According to Part 15 of the FCC (Federal Communications Commission) Regulations, this symbol indicates that the device has been tested and approved in compliance with and under the conditions of a Class B device.

III. Technical specifications

1) Technical specifications

General characteristics		
Type	Specification(s)	Mark(s)
Measured variable	Free chlorine (DPD 1)	-
Structure	Probe 2 electrodes.	
Probe power supply	Product must be supplied by a SELV source between 12 and 22V ±10%	-
Consumption	25mA Max.	
Electrical protection	NA	-
Maximum operating temperature	0°C to 55°C (32°F to 131°F)	-
Storage temperature	-10 °C to 60°C (14 °F to 140°F)	-
Humidity	Max. 90% without condensation	-
Altitude	Use less than 2000m	-
Materials of the head	PMMA (Plexiglass)	
Nature of electrodes	Removable counter electrode: 99% Copper Work electrodes: 99.9% pure Gold (CAA320X) 99.9% pure platinum (CAA330X)	-
Housing material	PVC	-
Mechanical strength of the envelope	Impact resistance IK06 (1J) according to IEC 62262 at 0°C	-
Mechanical cleaning element	Cobalt-reinforced glass bead (Qty: 80)	
Dimensions	Length: 230 mm Diameter: 30 mm	-
Weight of the housing	460 grs	-
Protection rating	IP 65	-
Max working pressure	4 bars	-
Degree of pollution	2	
Measuring range		
Measuring range	0 – 2 ppm, ref. CAA3205 and CAA3305 0 – 10ppm, ref. CAA3206 and CAA3306	-
Measuring range pH	5 – 9 pH	-
Precision	+/-2% of the measuring range	-
Response time	<30s	-
Output		
Analog output	Non-insulated analog output 4…20mA Max 500 Ω	-

The probe is connected to a limited power source in accordance with IEC61010-1.

2) Parameters and Measurement scale

Measures and reguations		
Parameters	**Measurement scale**	**Precision**
Free chlorine	0 - 2 ppm	± 2 %
Free chlorine	0 - 10 ppm	± 2 %

IV. Installation conditions

To guarantee the user safety and to ensure correct operation of your probe, please observe the following installation instructions:

- Install the probe in a dry location
- The probe must be protected against rain, frost and direct sunlight
- The room temperature must range between 0°C and 55°C, with no condensation
- Choose an installation location free from vibration

Choose an installation location free from vibration:

- The probe risks to be damaged.
- The measures can be disrupted.
- The warranty is not applicable!

V. Mechanical and hydraulic installation

1) Probe overview

For a new probe everything you need is in the box delivered.

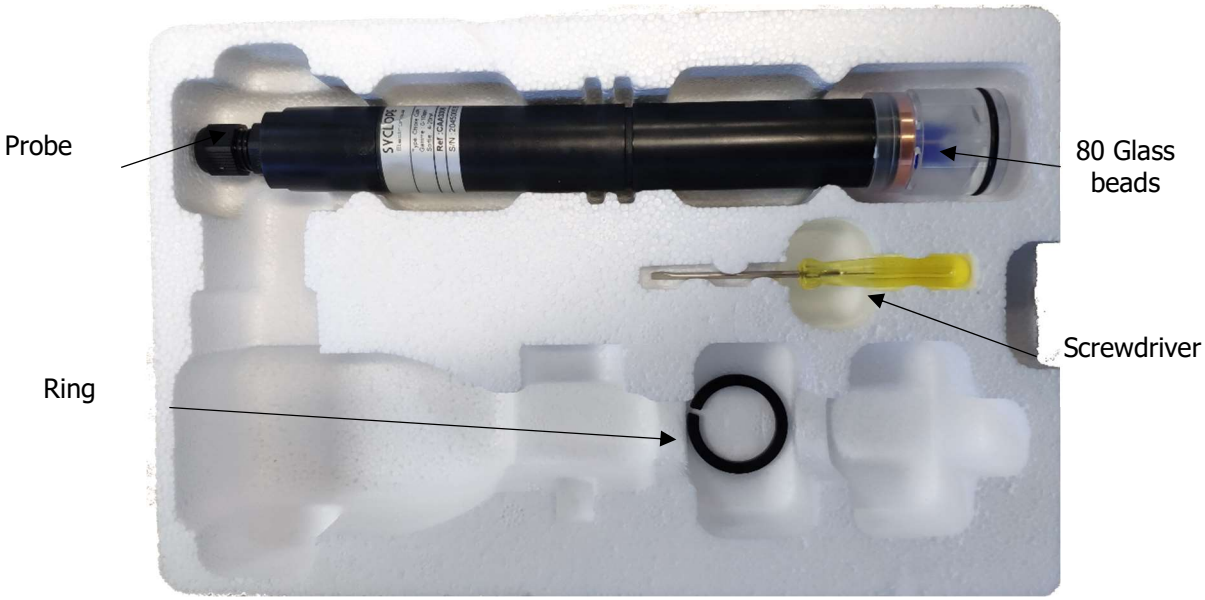

2) Installation in the probe housing

The CAA320X et CAA330X probes ares installed in the SYCLOPE measuring chambers (modular type BMT or BMT block) whose dimensions allow the installation of standard 1″ probes. Hydraulic connections are made using PE flexible tubes or compatible connections.

Overview

BMP modular chambers

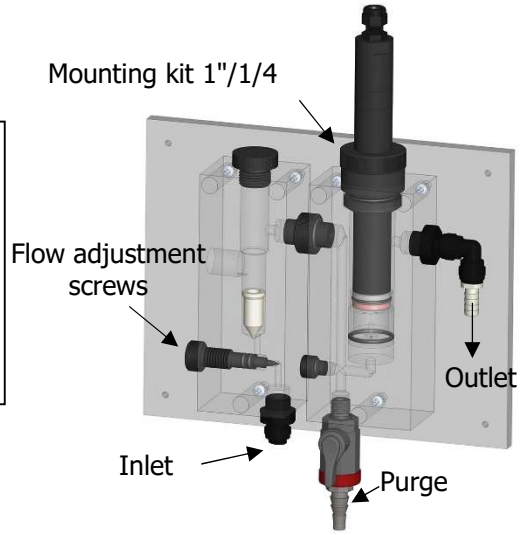

BMT measurement block

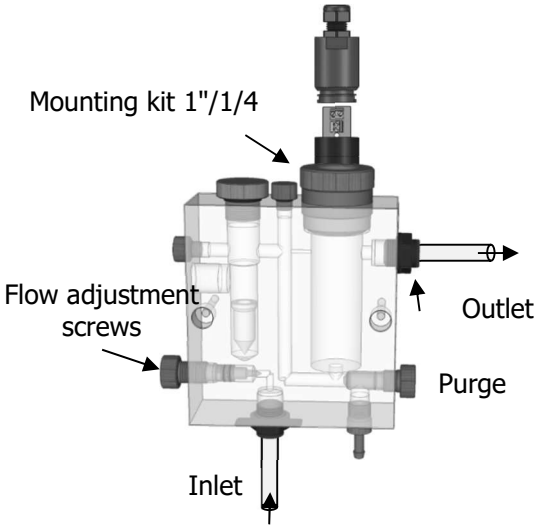

Mounting kit + ring

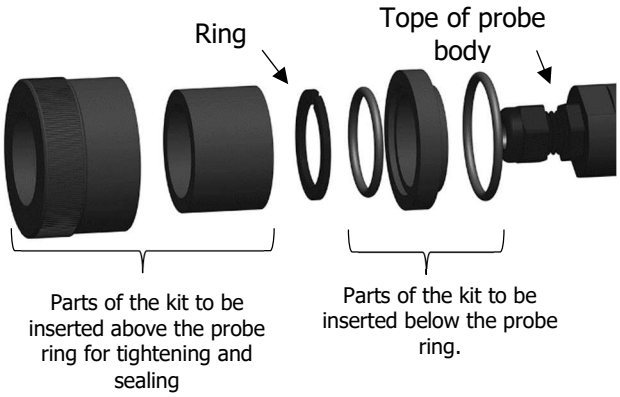

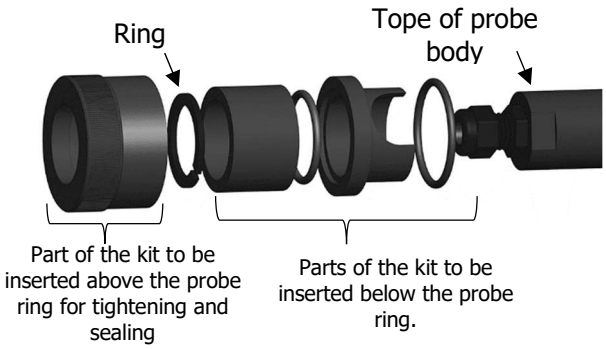

Step 1

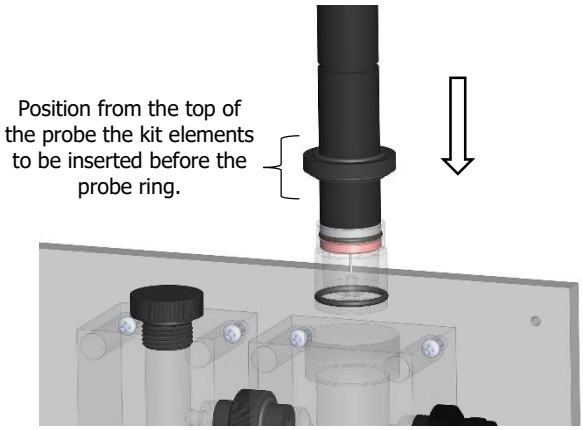

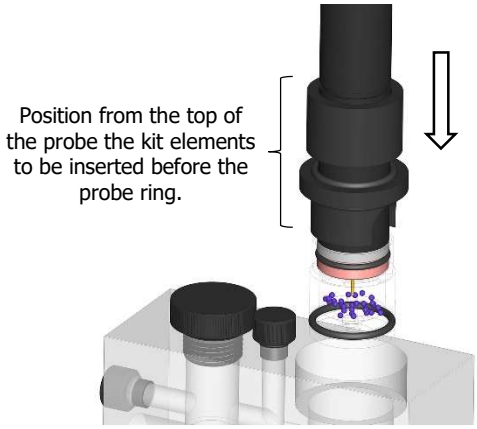

Step 2

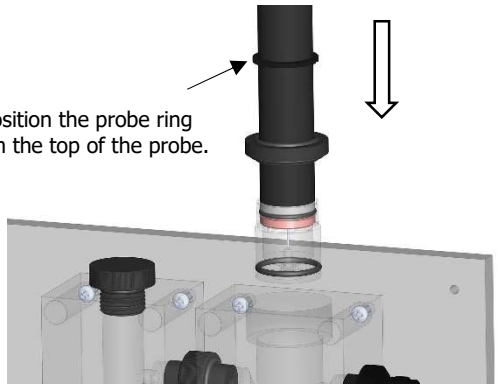

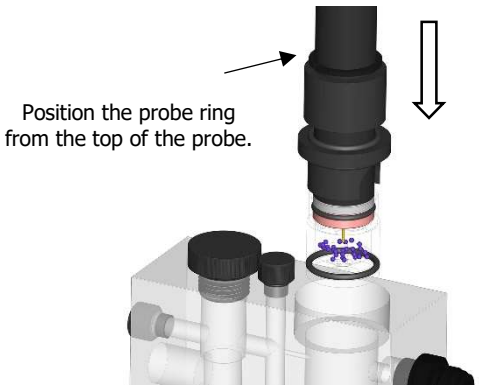

Step 3

Insert the probe into the measuring chamber.

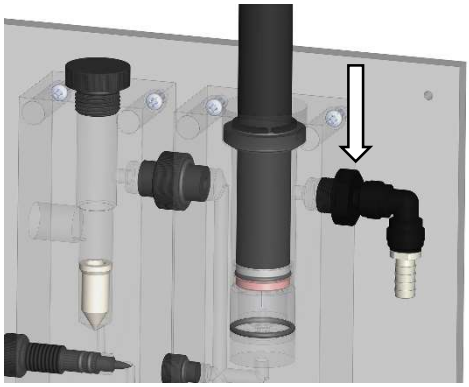

Insert the probe into the measuring chamber.

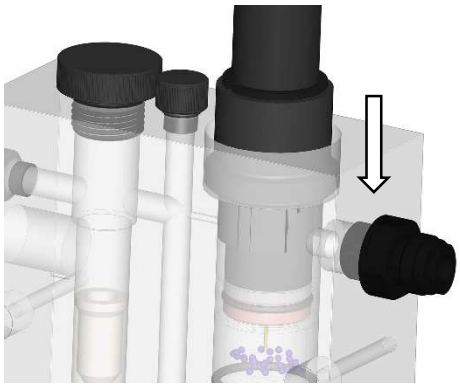

Step 4

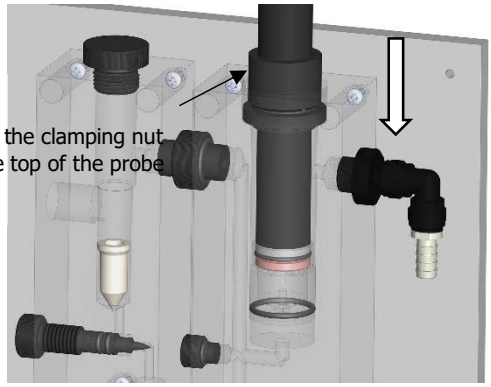

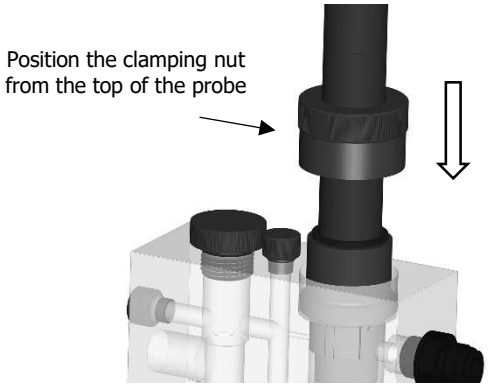

Step 5

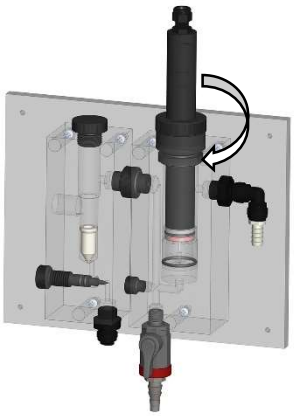

- Water the flow chamber and adjust the flow meter to reach the required flow rate (30l/h) using the flow adjustment screw.

VI. Electrical connections

1) Electrical connections

Electrical installations must be carried out according to the standards and by authorized personnel!
Before making the connections, turn off the power supplies!

2) Analog power and output operational connections

The probe must always remain on. It must never be stored off in water. In case of extended use shutdown, remove the probe from the passage chamber and store it in its original dry box.

The cell output signal has no galvanic separation.

Probe electrical connection is WITHOUT polarity.

The probe is connected to a limited power source in accordance with IEC61010-1.

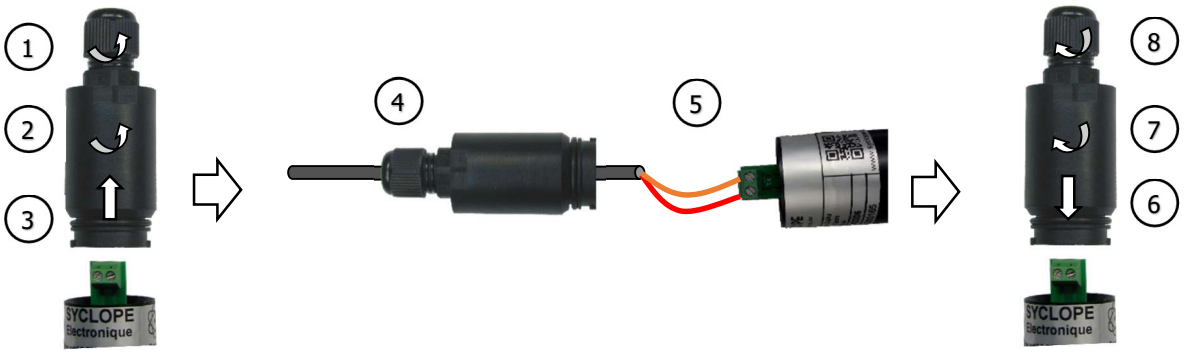

- Loosen the cable gland PG7 (1).
- Unscrew the top of the measuring probe counter-clockwise (2) by a quarter turn and remove it (3).
- Run the two-wire cable (4) (caution: allow about a 5cm set of insulated measuring conductor in the measuring cell).
- Then connect the two-wire cable to the sensor terminals (5).
- Screw the top part completely in the body clockwise to the stop (6-7).
- After locking the PG7 connector nut (8), mount the measuring probe into its passage chamber.

VII. Calibration

CAA320X et CAA330X probes require a calibration of the slope of the sensor and, if necessary (low chlorine measurement), a calibration of the zero point. Depending on the physio-chemical parameters of the water, the gain multiplier switch can be used.

1) Calibration of the sensor slope

A calibration of the slope of the sensor is required after the first commissioning (about 3h) and on a regular basis for normal chlorination operation. If chlorine dioxide is present, the calibration shall take account of its presence. The action of chlorine dioxide is 6 times greater than the measured chlorine.

- Circulate chlorinated water in the chamber, wait for stabilization of the reading on the control device.
- The chlorine value must be at least 10% of the measurement scale.
- Perform a chlorine measurement using a reference device.
- Perform a countermeasure to validate this standard value.
- Enter this value in the regulator to validate calibration.

In order to perform a correct calibration, the probe must be used in the measuring chamber, at nominal pressure with the recommended flow rate (see specifications).

2) Zero-point calibration (if required)

Zero-point calibration is required when measuring at low chlorine value. In principle, the cell has a very stable "zero" in absence of chlorine or any other oxidant. However, in order to ensure a perfect zero integrating the drifts of the measuring chain, it should be verified and, if necessary, calibrated.

- Clear the calibrations on the analyzer.
- Turn off water circulation in the chamber.
- Allow values to stabilize for several minutes.
- Once the stability of the measure is perfect, make the zero on the analyser
- Reopen the circulation of water
- After the zero-point calibration a calibration of the slope of the probe should be done (See § above)

3) Use of the gain multiplier switch

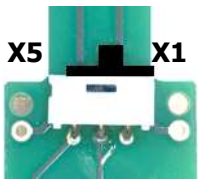

Depending on the pysico-chemical parameters of the water, the gain multiplier switch can be used. This switch allows to multiply the gain of the slope by 5.

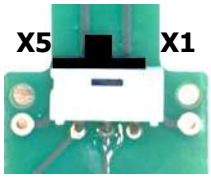

Example 1 :

The use of stabilizer will cause a drop in chlorine measurement. If necessary, use the gain multiplier switch by passing it in position X5.

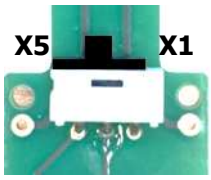

Example 2 :

In high pH seawater the measurement of chlorine or brome will be low. If necessary, use the gain multiplier switch by passing it in position X5.

VIII. Maintenance

1) Disassembly the probe of the measuring chamber

Before dismantling the probe from its passage chamber, close the shut-off valves upstream and downstream of the sampling circuit. Remove pressure from the system by opening the drain located under the passage chamber.

- For a probe already in place, unscrew the 1'1/4 nut and remove the probe from its housing after disconnecting the electrical wires using the screwdriver provided in the storage box..

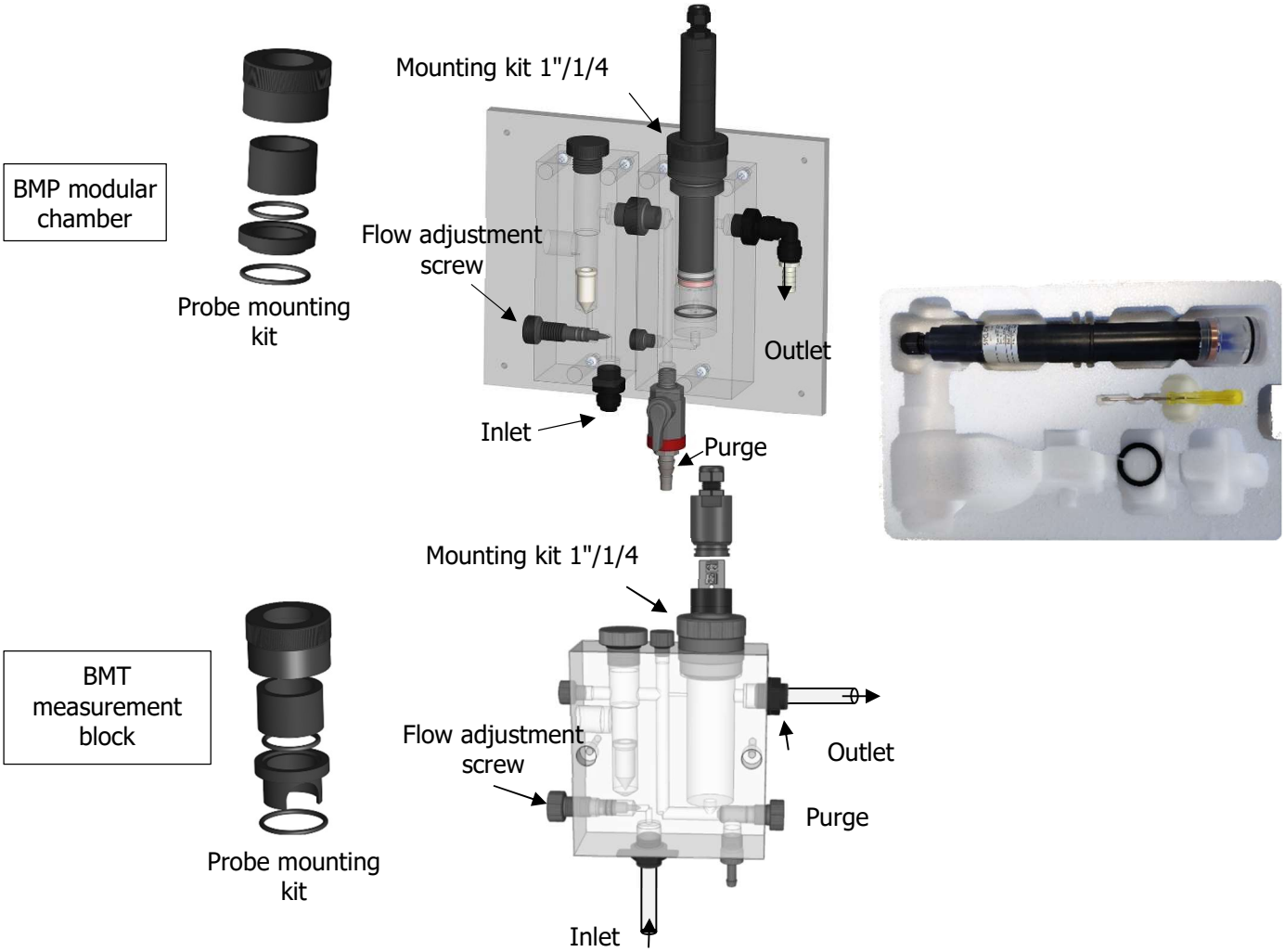

2) Change of glass beads

Glass beads have a limited-service life, which depends on the flow rate in the measuring chamber. It's recommended to ensure the life of the probe and to have consistent values to change beads every year.

Please follow these steps to change beads:

- Disconnect the power supply wires from the measurement loop.
- Remove the probe from the measuring chamber (see above).
- Take the probe vertically and undo the packing cap by turning clockwise, **take care not to loosen the copper couter-electrode and damage the platinum or gold rod**.
- Dispose of the old glass beads in the appropriate bin to meet the recycling cycle.
- Ensure packaging cap is in good condition and clean.
- Take the new beads and carefully place them in the cap, taking care not to lose any bead.

- Position the bead-filled cap under the probe and fill it back on the probe by turning clockwise and locking the packing cap on the O-ring above the copper electrode.

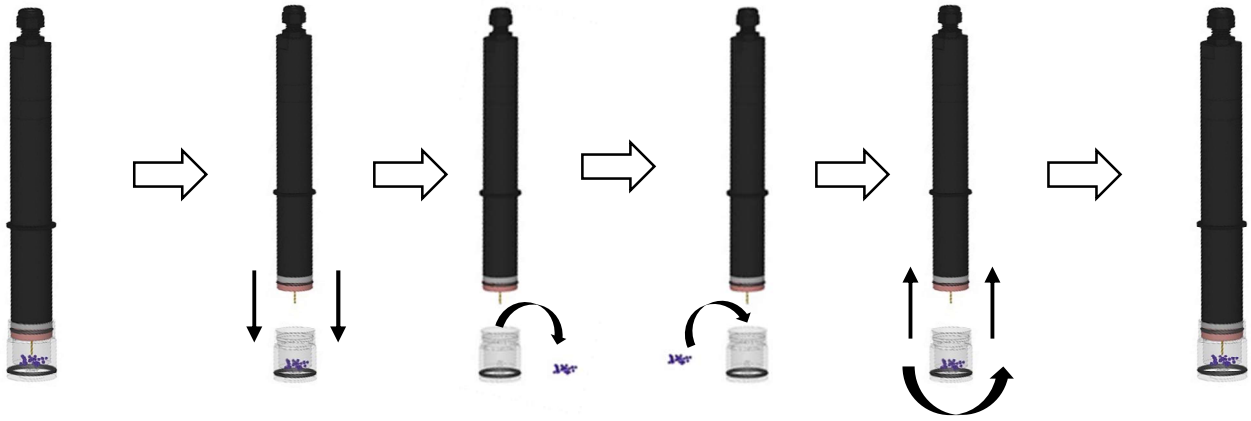

3) Change of the copper counter-electrode

The change of the copper counter-electrode must be done every year. This period may vary depending on water quality and flow rate on electrodes.

Please follow these steps to change the copper counter-electrodes:

- Disconnect the power supply wires from the measurement loop.
- Remove the probe from the measuring chamber (see above)
- Take the probe vertically and undo the packing cap by turning clockwise, take care not to lose glass beads.
- Loosen the copper counter-electrode clockwise.
- Collect and discard the seals. At each electrode change the seals must be changed. **BE CARREFUL NOT to damage the platinum or gold rod**!
- Replace new gasket and tighten new copper counter-electrode until O-ring is tight.
- Reassemble the packaging cap with the glass beads.
- After a change of counter-electrode the zero-point and slope calibration must be carried out as described in § « VI Calibration ».

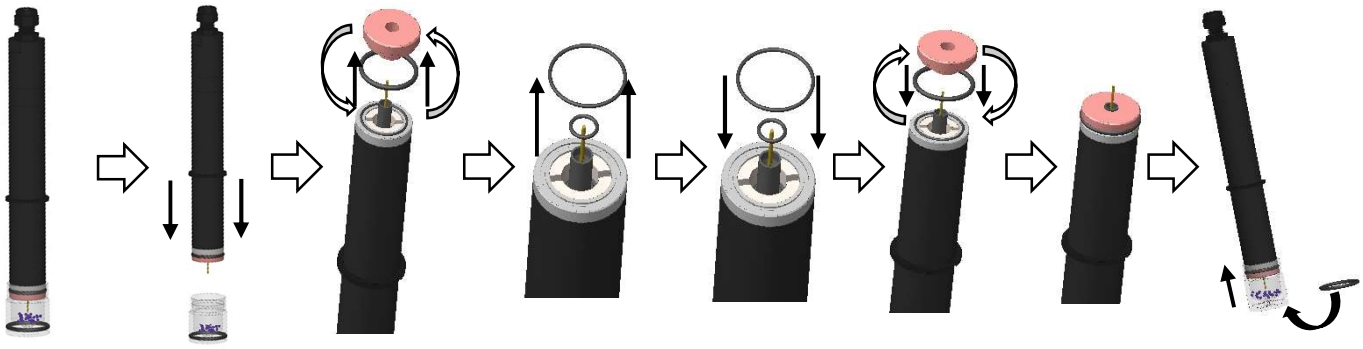

During all operations be careful not to touch and damage the gold or platinum rod.

IX. Maintenance kit

Reference	Designation
CAA3209	Maintenance kit (Copper electrode + beads + seals) CAA32xx et CAA33xx probe

Items in the maintenance kit
Batch of cobalt-doped glass beads
Copper electrode
O-rings for copper electrode

X. Maintenance

Probe must always be powered on. It must never be stored off in water.

In case of extended use shutdown, remove the probe from the measuring chambre, dry it and store it in its original dry box.

Repairs can only be carried out by qualified technicians and must be carried out exclusively in our factory.

For every other problem not mentioned in this manual or for any other information, please contact your reseller or authorized installer or our after-sales services.

Contact: Service-technique@syclope.fr

NOTES

SYCLOPE Electronique S.A.S.
Z.I. Aéropole pyrénées
Rue du Bruscos
64 230 SAUVAGNON - France –
Tel: +33 559 337 036
Fax: +33 559 337 037
Email: syclope@syclope.fr
Internet: http://www.syclope.fr

© 2020 by SYCLOPE Electronique S.A.S.
Subject to modification