UltraMax®

Interface to use Daintree® Networked with 0-10V devices (WGZ100)

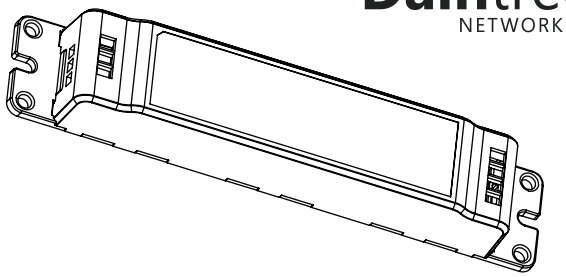

STOP BEFORE YOU BEGIN

Read these instructions completely and carefully.

⚠ WARNING / AVERTISSEMENT

RISK OF ELECTRIC SHOCK
- Turn power off before inspection, installation or removal.
- Properly ground electrical enclosure.

RISK OF ELECTRIC SHOCK
- Follow all NEC and local codes.
- Use only UL approved wire for input/output connections.
- Minimum size 14 AWG for continuous runs.

RISQUES DE DÉCHARGES ÉLECTRIQUES
- Coupez l'alimentation avant d'inspecter, installer ou déplacer le luminaire.
- Assurez-vous de correctement mettre à la terre le boitier d'alimentation électrique.

RISQUES D'INCENDIE
- Respectez tous les codes NEC et codes locaux.
- N'utilisez que des fils approuvés par UL pour les entrées / sorties de connexion. Taille minimum 14 AWG.

Save These Instructions

Use only in the manner intended by the manufacturer. If you have any questions, contact the manufacturer.

Provided Components

- WGZ100
- Installation Guide

Tools and Parts Required

- Wire nuts
- Equipment necessary for luminaire disassembly
- Wire stripper/cutter

Installation Procedure and Troubleshooting

- Follow wiring diagram provided
- Secure interface within suitable enclosure
- Connect Interface Line (L) and Neutral (N) to input power
- Connect Relay Output to driver input Line and Connect Driver Neutral to input power Neutral
- If the device does not perform in the expected manner, do not attempt to repair, contact the manufacturer.

For Your Safety
Read and observe all WARNINGS shown throughout these instructions

- Installation to be performed by factory trained or qualified personnel
- This device is designed for field wiring in a suitable junction box in accordance with applicable codes
- Provide suitable enclosure for outdoor use
- Use this product only in the manner intended by the manufacturer. If there are any questions or concerns, contact the manufacturer
- This device complies with FCC Part 15 Subpart B Class B

Product Specifications

Characteristic	Parameter
Input power	120-277VAC 50/60HZ,Maximum 3A
Relay Contact	120-277VAC 50/60HZ,Maximum 3A
Housing	White
Size	7.08"lxl.38"wx0.93"h(180*35*23.5mm)
Wire Size	24-14AWG,Solid or Tinned-Stranded Copper for P2 terminal
Connectivity	Left : (N)Input (L)Input (L)Relay Output Right : 0-10V GND 0-10V OUT
Output Power	0-10 UL/NEC Class 2 protected 0-10V dimming,Maximum 32mA
Loading	1) 120-277V, 3A, General Use 2) 120-277V, 3A, Electronic Ballast or LED Driver
Function	Translates Daintree® Networked messages to control electronic ballast or LED driver • On/Off - Relay Status • Dim Level - 0-10V Dimming Voltage Level
Warranty	10 years
Operating Ambient Temperature	-25C to +50C
Certification	UL 60730-1/1310+FCC Part 15,Subpart B,Class B c UL us LISTED Miscellaneous Controls E486320 FCC ID: 2AS3F-WGZ100 IC: 25008-WGZ100
SKU	95041200

Wiring Diagrams

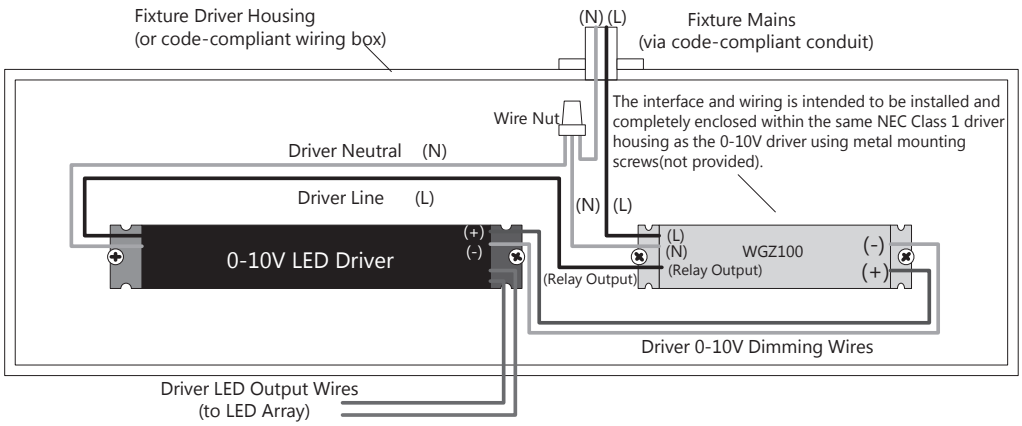

Type 1.B action Pollution degree 2 Rated Impulse voltage 4000V

Dimension

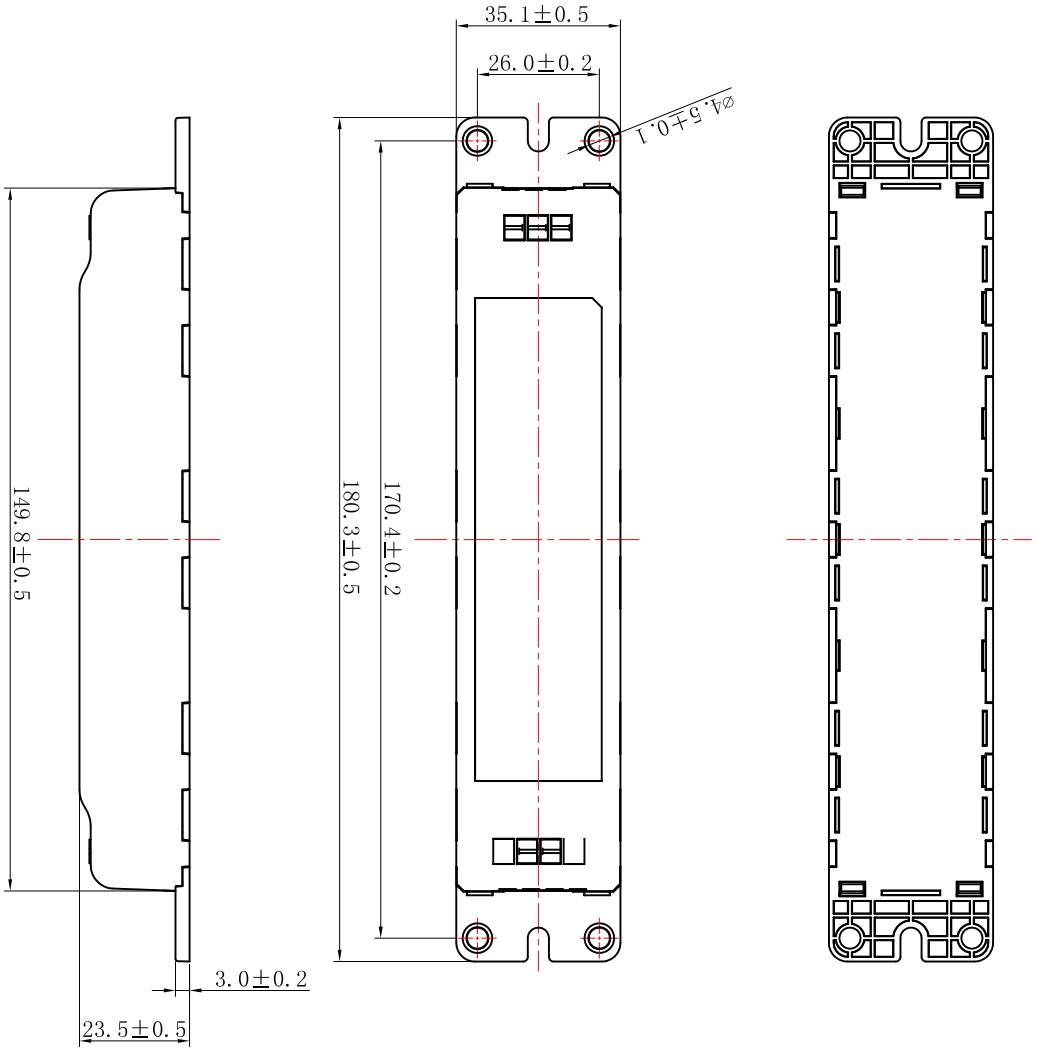

FCC / IC COMPLIANCE STATEMENTS

This device complies with Part 15 of the FCC Rules. Operation is subject to the following two conditions: (1) This device may not cause harmful interference, and (2) this device must accept any interference received, including interference that may cause undesired operation.

This device contains license-exempt transmitter(s)/receiver(s) that comply with Innovation, Science and Economic Development Canada's license-exempt RSS(s). Operation is subject to the following two conditions:

This device may not cause interference.
This device must accept any interference, including interference that may cause undesired operation of the device.

L'émetteur/récepteur exempt de licence contenu dans le présent appareil est conforme aux CNR d'Innovation, Sciences et Développement économique Canada applicables aux appareils radio exempts de licence. L'exploitation est autorisée aux deux conditions suivantes :

L'appareil ne doit pas produire de brouillage
L'appareil doit accepter tout brouillage radioélectrique subi, même si le brouillage est susceptible d'en compromettre le fonctionnement.

To satisfy FCC/ISED RF exposure requirements a separation distance of 20 cm or more must be maintained between the antenna of this device and persons during operation. Operation at closer than 20cm is not permitted.

Pour être conforme aux limites d'exposition aux ondes RF des normes FCC/ISED, une distance de séparation d'au moins 20 cm doit être maintenue entre l'antenne de cet appareil et toute personne pendant son opération. Mettre en opération cet appareil a une distance plus rapprochée que 20 cm n'est pas permis.

Caution: The user is cautioned that changes or modifications not expressly approved by the party responsible for compliance could void the user's authority to operate the equipment.

Note: This equipment has been tested and found to comply with the limits for a Class B digital device, pursuant to part 15 of the FCC Rules. These limits are designed to provide reasonable protection against harmful interference in a residential installation. This equipment generates uses and can radiate radio frequency energy and, if not installed and used in accordance with the instructions, may cause harmful interference to radio communications. However, there is no guarantee that interference will not occur in a particular installation. If this equipment does cause harmful interference to radio or television reception, which can be determined by turning the equipment off and on, the user is encouraged to try to correct the interference by one or more of the following measures:
—Reorient or relocate the receiving antenna.
—Increase the separation between the equipment and receiver.
—Connect the equipment into an outlet on a circuit different from that to which the receiver is connected.
—Consult the dealer or an experienced radio/TV technician for help

Suppliers Name: Current Lighting Solutions, LLC

Suppliers Address (USA): 1975 Noble Road, East Cleveland, OH 44112

Suppliers phone number and / or internet contact information: 1-866-855-8629

© 2020 Current Lighting Solutions, LLC. All rights reserved. GE and the GE monogram are trademarks of the General Electric Company and are used under license. Information provided is subject to change without notice. All values are design or typical values when measured under laboratory conditions.

CTRL027 (Rev 07/05/20) Enovia - A-1009416