# WWD2-2IW

Daintree® Networked
Wireless Wall Dimmer

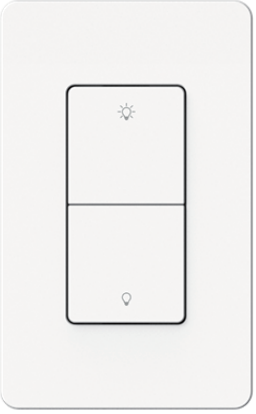

## STOP BEFORE YOU BEGIN

Read these instructions completely and carefully.
Save these instructions for future use.

**⚠ WARNING / AVERTISSEMENT**

**RISK OF ELECTRIC SHOCK**
- Disconnect power before service installation, or maintenance of the product.

**RISK OF FIRE**
- Follow all relevant IEC or UL instructions and local building codes.

**RISK OF INJURY**
- Wear safety glasses and gloves during installation and servicing.

## FCC / IC COMPLIANCE STATEMENTS

This device contains licence-exempt transmitter(s)/receiver(s) that comply with Innovation, Science and Economic Development Canada's licence-exempt RSS(s). Operation is subject to the following two conditions:
- This device may not cause interference.
- This device must accept any interference, including interference that may cause undesired operation of the device.

L'émetteur/récepteur exempt de licence contenu dans le présent appareil est conforme aux CNR d'Innovation, Sciences et Développement économique Canada applicables aux appareils radio exempts de licence. L'exploitation est autorisée aux deux conditions suivantes :
- L'appareil ne doit pas produire de brouillage;
- L'appareil doit accepter tout brouillage radioélectrique subi, même si le brouillage est susceptible d'en compromettre le fonctionnement.

To satisfy FCC/ISED RF exposure requirements a separation distance of 20 cm or more must be maintained between the antenna of this device and persons during operation. Operation at closer than 20cm is not permitted.

Pour être conforme aux limites d'exposition aux ondes RF des normes FCC/ISED, une distance de séparation d'au moins 20 cm doit être maintenue entre l'antenne de cet appareil et toute personne pendant son opération. Mettre en opération cet appareil a une distance plus rapprochée que 20 cm n'est pas permis.

## Prepare Electrical Wiring

*Electrical Requirements*
- In case of Digital bus miswiring, mains can be present on the device. Make sure all electricity is switched off before inspection.

*Grounding Instructions*
- The grounding and bonding of the overall system shall be done in accordance with National electric Code (NEC) Article 600 and local codes.

## IMPORTANT

To ensure the product warranty is valid, please ensure all installation instructions and environmental conditions for storage and operation are complied with.
Installation to be performed by factory trained or qualified personnel.

## Save These Instructions

Use only in the manner intended by the manufacturer. If you have any questions, contact the manufacturer.

# Installation

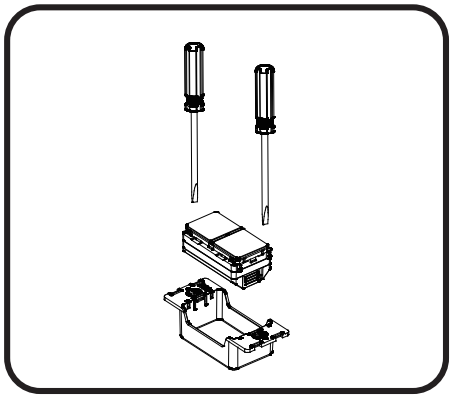

1 Usea standard screwdriver to remove the devices from the back housing

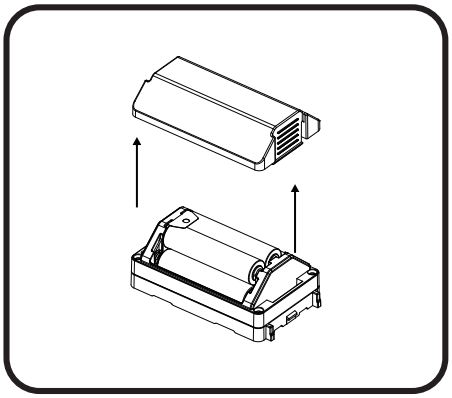

2 Separate the battery cover from the device. Pull the plastic insulation strip out of the battery compartment. Put the battery cover back on the device.

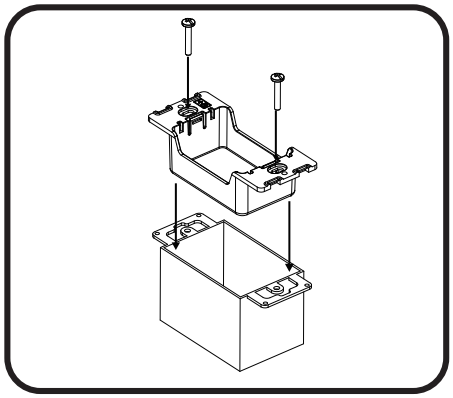

3 Insert the back housing piece into the junction box and secure with two screws.

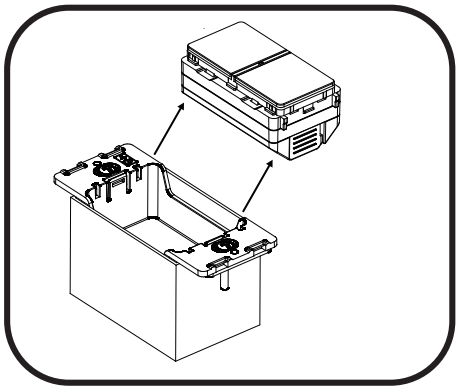

4 Install the main body of the device into the back housing.

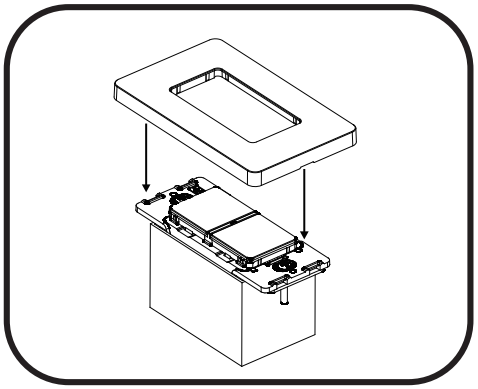

5 Install the faceplate onto the device. Note: Device supports the use of other standard faceplates on the market.

# Network Reset

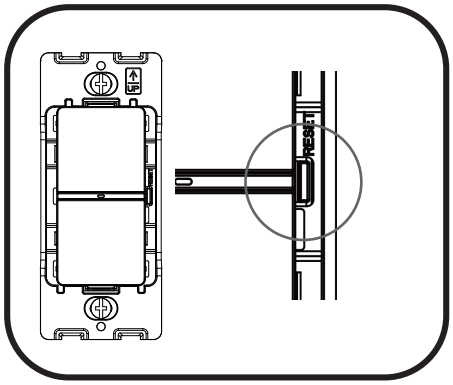


To reset the network of the device, remove the faceplate from the device. Then press and hold the reset button for 5 seconds. Install the faceplate back onto the device. Press either dimming up or down button to enter the pairing mode to join the device to a network.

## Battery Replacement

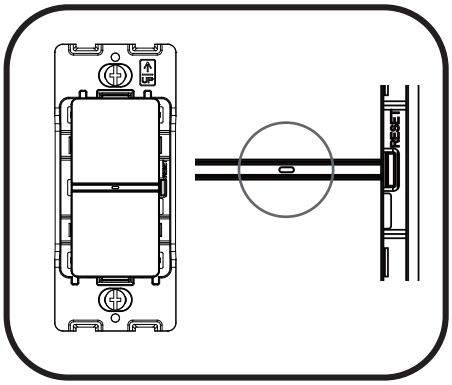


1 The device's LED flashing every 30 seconds indicates that the batteries need to be replaced.

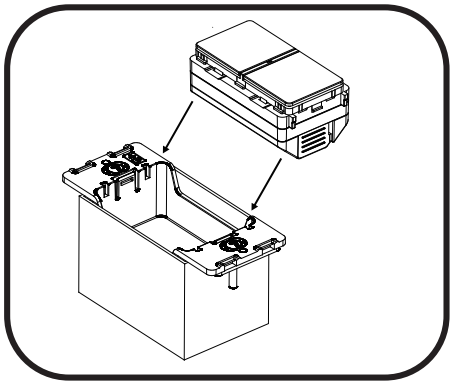

2 Remove the device from the back housing.

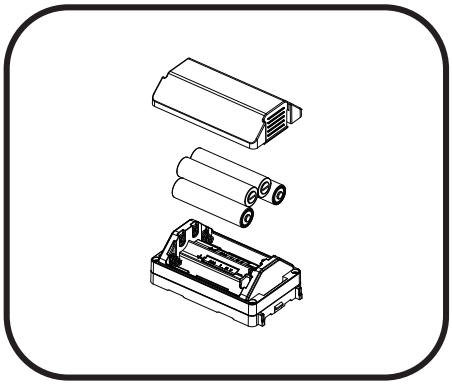

3 Separate the battery cover from the device. Replace the batteries with AAA batteries. All batteries need to be replaced at the same time.

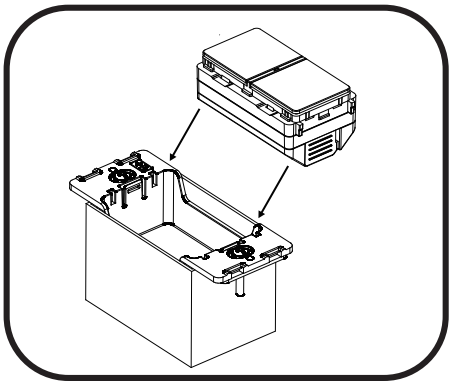

4 Install the main body of the device into the back housing.

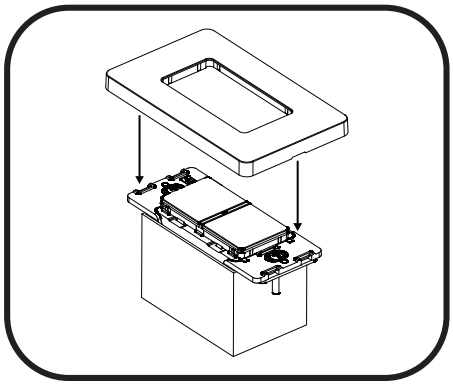

5 Install the faceplate onto the device. The device will rejoin its network automatically.

## Product Dimensions

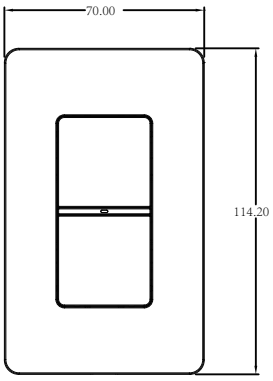


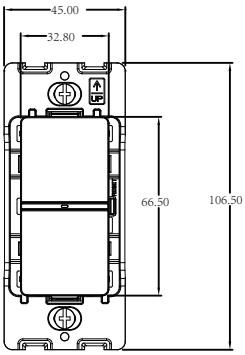


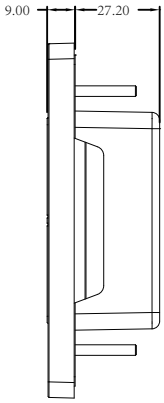

# Product Overview

# Technical Data

## Product Specifications

| | |
|---|---|
| **Dimensions** | 114mm H x 70mm W x 36mm D |
| **Weight** | 130g |
| **Power Supply** | (4) AAA1.5V battery |
| **battery life** | 5yr (normal operation) |
| **Operating Environment** | -10°C to 40°C （Indoor Use Only) |
| **Status indicator** | Network joined/Button triggered |
| **Mounting** | Surface mounted, screw hole in backplate, cover could be removed |
| **Warranty** | 5 years |

## Product Availablity

| SKU | DESCRIPTION | ARTICLE NO |
|---|---|---|
| 93141337 | Daintree®Networked Wireless Wall Dimmer | WWD2-2IW |

## Product Certifications

c UL us LISTED Operating Control E486320

FCC ID: 2AS3F-WWD2IW
IC : 25008-WWD2IW

Caution: The user is cautioned that changes or modifications not expressly approved by the party responsible for compliance could void the user's authority to operate the equipment.

Note: This equipment has been tested and found to comply with the limits for a Class B digital device, pursuant to part 15 of the FCC Rules. These limits are designed to provide reasonable protection against harmful interference in a residential installation. This equipment generates uses and can radiate radio frequency energy and, if not installed and used in accordance with the instructions, may cause harmful interference to radio communications. However, there is no guarantee that interference will not occur in a particular installation. If this equipment does cause harmful interference to radio or television reception, which can be determined by turning the equipment off and on, the user is encouraged to try to correct the interference by one or more of the following measures:
—Reorient or relocate the receiving antenna.
—Increase the separation between the equipment and receiver.
—Connect the equipment into an outlet on a circuit different from that to which the receiver is connected.
—Consult the dealer or an experienced radio/TV technician for help

## Supplier's Declaration of Conformity
## 47 CFR § 2.1077 Compliance Information

This device complies with Part 15 of the FCC Rules. Operation is subject to the following two conditions: (1) This device may not cause harmful interference, and (2) this device must accept any interference received, including interference that may cause undesired operation.

Porduct Name: Wireless Wall Dimmer
Model No: WWD2-2IW

Suppliers Name: Current Lighting Solutions, LLC
Suppliers Address (USA): 1975 Noble Road,  East Cleveland, OH 44112
Suppliers phone number and / or internet contact information: 1-866-855-8629



© 2020 Current Lighting Solutions, LLC. All rights reserved. GE and the GE monogram are trademarks of the General Electric Company and are used under license. Information provided is subject to change without notice. All values are design or typical values when measured under laboratory conditions.

CTRL027 (Rev 07/05/20)  Enovia - A-1025984