WWD2-2IW

Daintree® Wireless Controls
Wireless Wall Dimmer

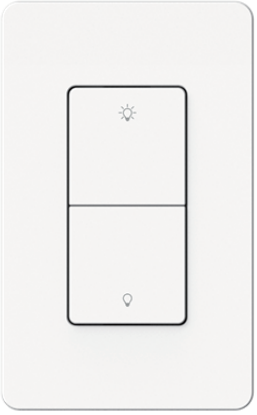

Product Overview

The Daintree® Wireless Wall Dimmer is a battery-powered wall switch for use in a Daintree Networked or Daintree EZ Connect application. The WWD2-2IW device installs into an existing junction box to replace the existing wall-mounted switch with a wireless solution that enables dimming and on/off commands to be delivered to the luminaires in its commissioned space. The communication with the Daintree system utilizes a secure and reliable wireless connection which helps minimize installation costs and complexity.

STOP

BEFORE YOU BEGIN

Read these instructions completely and carefully.
Save these instructions for future use.

⚠ WARNING

RISK OF ELECTRIC SHOCK
- Disconnect power before servicing or installing product.

IMPORTANT

To ensure the product warranty is valid, please ensure all installation instructions and environmental conditions for storage and operation are complied with.
Installation to be performed by factory trained or qualified personnel.

Save These Instructions

Use only in the manner intneded by the manufacturer.
If you have any questions, contact the manufacturer.

Prepare Electrical Wiring

Electrical Requirements

- When replacing a line voltage switch, the power must be off at the branch circuit breaker. Bypass the line voltage switch to provide uninterrupted power to the fixtures and make sure the connection is properly insulated before installing the wireless switch.

Installation of Back Housing onto Junction Box

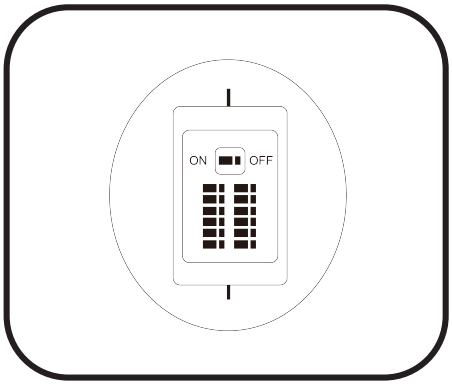

1 Disconnect power to the junction box

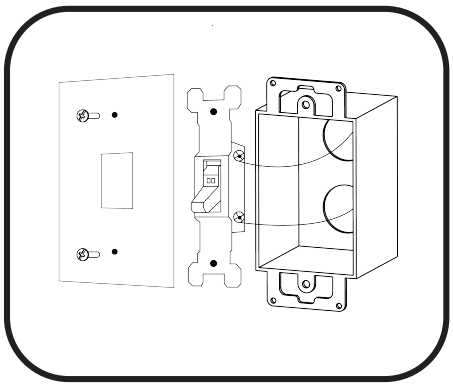

2 Remove the junction box cover plate

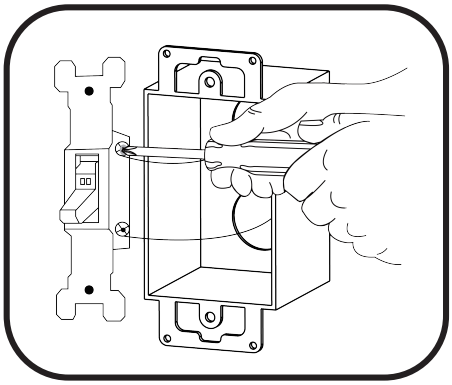

3 Uninstall existing wall switches from the junction box.

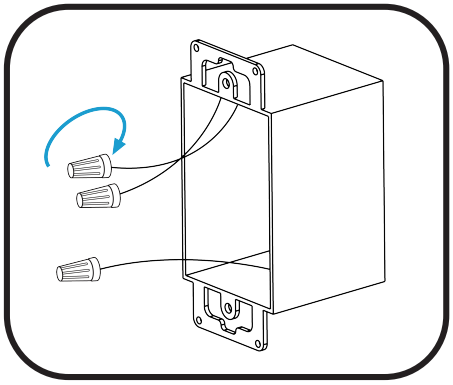

4 Reconnect wires (previously connected to wall switch) with wire nuts.

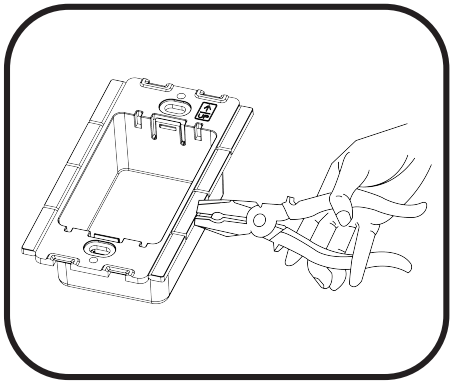

5 For proper installation into a dual gang junction box, the tabs between adjacent back housings must be removed. Carefully observe the correct orientation (the UP arrow should be in the upper right corner on each back housing). After double checking the product orientation, break off the necessary tabs using pliers.

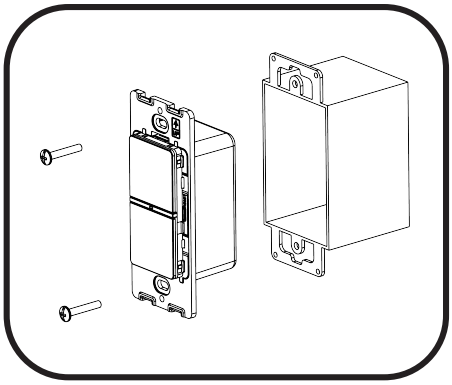

6 Install the back housing(s) of the wall dimmer(s) into the wall box.

DOUBLE CHECK PRODUCT ORIENTATION BEFORE BREAKING OFF TABS.
The wall dimmer will only install into the back housing in one orientation. Break off tabs only after the correct product orientation has been confirmed.

Installation of Device into Back Housing

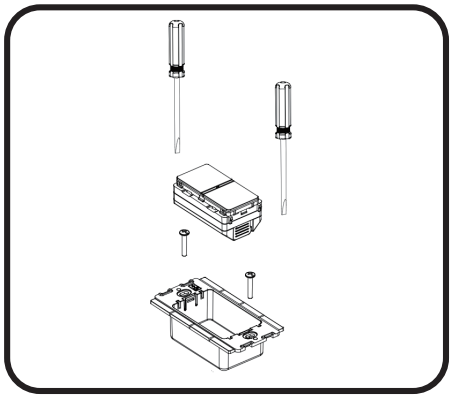

1 Use a standard screwdriver to remove the devices from the back housing

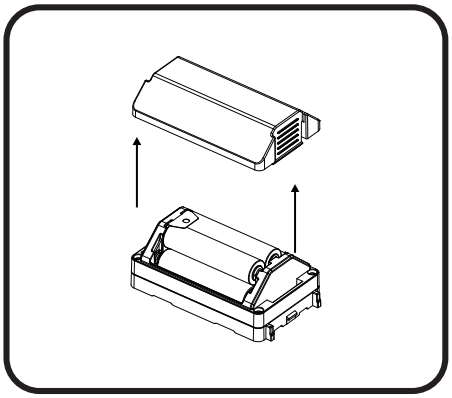

2 Separate the battery cover from the device. Pull the two plastic insulation strips out of the battery compartment. Put the battery cover back on the device.

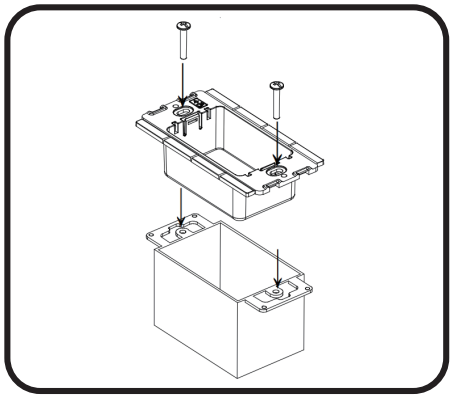

3 Insert the back housing piece into the junction box and secure with two screws.

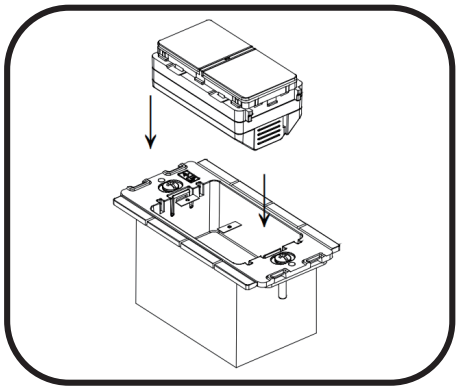

4 Install the main body of the device into the back housing.

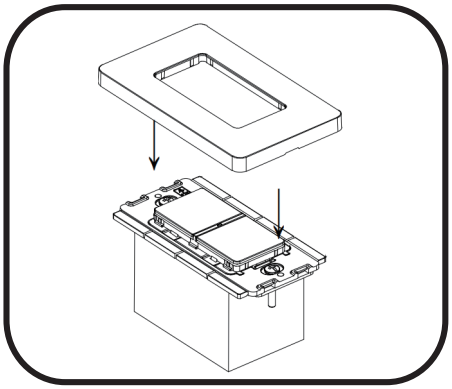

5 Install the faceplate onto the device. Note: Device supports the use of other standard faceplates on the market.

Network Reset

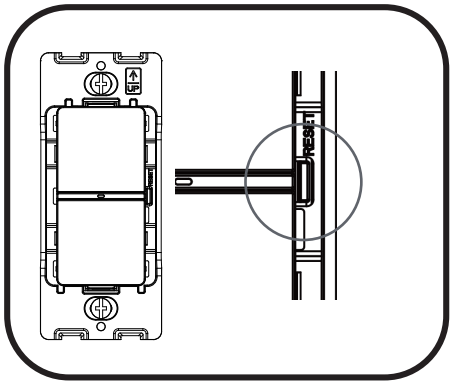

To reset the network of the device, remove the faceplate from the device. Then press and hold the reset button for 5 seconds. Install the faceplate back onto the device. Press either dimming up or down button to enter the pairing mode to join the device to a network.

Battery Replacement

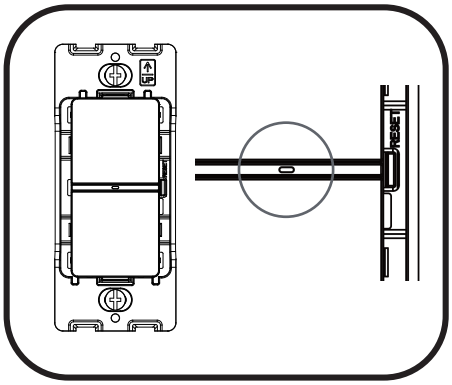

1 The device's LED flashing on for 2 seconds every 30 seconds indicates that the batteries need to be replaced.

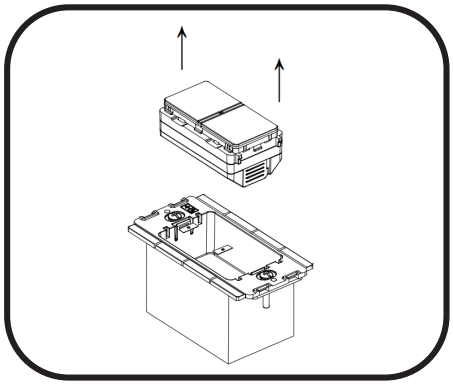

2 Remove the device from the back housing.

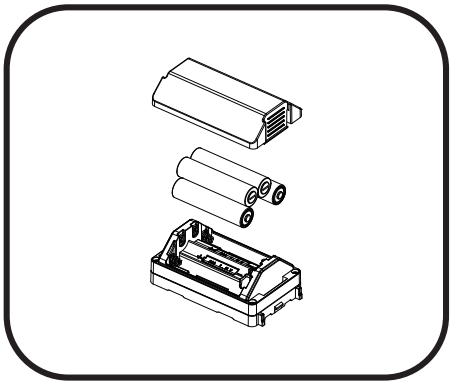

3 Separate the battery cover from the device. Replace the batteries with AAA batteries. All batteries need to be replaced at the same time.

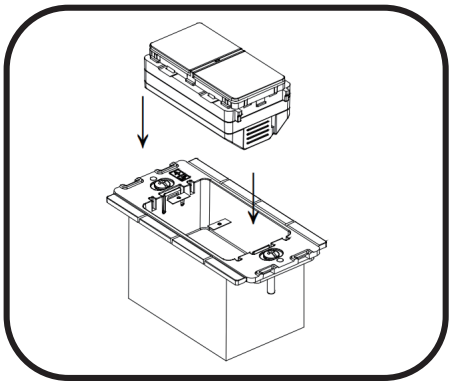

4 Install the main body of the device into the back housing.

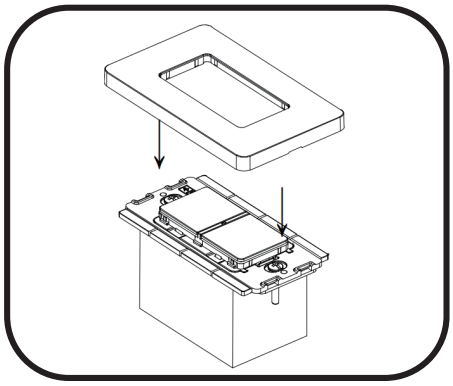

5 Install the faceplate onto the device. The device will rejoin its network automatically.

Product Dimensions

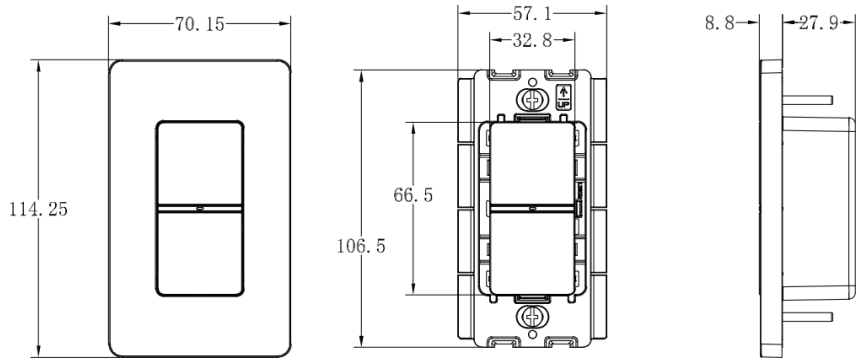

Product Operation

Button Functionality

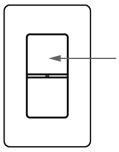

Up Button

Short press	Lights ON at previous level
Double short press	Lights ON at 100% output
Hold	Turn ON and dim up

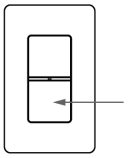

Down Button

Short press	Lights OFF
Double short press	Lights ON at minimum dimming level
Hold	Turn ON and dim down or dim down if lights are already ON

LED Indicator

Rapid flash (12 times per second) for up to 30 seconds	Device is trying to join a ZigBee network
Solid ON for 10 seconds	Device successfully joined a ZigBee network
Flashes once (100ms duration)	Device has been activated while in the network
Flashes ON 2 seconds every 30 seconds	Batteries need to be replaced

Technical Data

Product Specifications

Dimensions	114mm H x 70mm W x 36mm D
Weight	130g
Power Supply	(4) AAA 1.5V battery
Battery Life	5 years (normal operation)
Operating Environment	-10°C to 40°C (Indoor Use Only)
Status Indicator	Network join status, button triggered
Mounting	Mounts into junction box
Warranty	5 years
Purpose of Control	Operating Control
Construction of Control	Independently Mounted
Type 1 Action	
Pollution Degree 2	

Product Availablity

SKU	DESCRIPTION	ARTICLE NO
93141337	Daintree Wireless Controls Wall Dimmer, In Wall, 2 Button, Battery	WWD2-2IW

Product Certifications

c UL us LISTED
Operating Control
E486320

FCC ID: 2AS3F-WWD2IW
IC: 25008-WWD2IW

The alkaline batteries supplied with your wireless switch are prone to leak over their lifetime, particularly when the battery is mostly depleted. In the event that your battery leaks alkaline into the battery compartment, the chemicals can damage the metal terminals. The chances of this happening can be reduced by changing the batteries in the switch promptly when the batteries are nearing their end of their useful life. If a battery leak should occur, however, it should be cleaned up to prevent damage to the wireless switch.

WARNING: THE CHEMICALS LEAKED FROM ALKALINE BATTERIES ARE CORROSIVE. WHEN HANDLING LEAKING BATTERIES, PROPER PERSONAL SAFETY EQUIPMENT SHOULD BE USED, INCLUDING RUBBER GLOVES AND EYE PROTECTION.

If it is discovered that the batteries have leaked, wearing rubber gloves and using eye protection, remove all of the batteries from the battery compartment and seal them in a plastic bag. The bag should be discarded in a manner in accordance with local laws and regulations. Then, using a small cloth lightly moistened with vinegar or other mild acid, carefully wipe all of the leaked battery chemicals from inside the battery compartment and allow it to dry. Once dry, the batteries may be replaced and the switch may be reinstalled.

Supplier's Declaration of Conformity

47 CFR § 2.1077 Compliance Information

Product Name: Wireless Wall Dimmer
Model No: WWD2-2IW
Supplier's Name: Current Lighting Solutions, LLC
Supplier's Website: www.gecurrent.com
Supplier's Address (USA): Cleveland, Ohio
Supplier's Phone: 1-866-855-8629

This device complies with part 15 of the FCC Rules. Operation is subject to the following two conditions:
(1) This device may not cause harmful interference, and
(2) this device must accept any interference received, including interference that may cause undesired operation.

This device contains license-exempt transmitter(s)/receiver(s) that comply with Innovation, Science and Economic Development Canada's license-exempt RSS(s). Operation is subject to the following two conditions:
(1) This device may not cause interference.
(2) This device must accept any interference including interference that may cause undesired operation of the device.

L'émetteur/récepteur exempt de licence contenu dans le présent appareil est conforme aux CNR d'Innovation, Sciences et Développement économique Canada applicables aux appareils radio exempts de licence. L'exploitation est autorisée aux deux conditions suivantes:
(1) L'appareil ne doit pas produire de brouillage;
(2) L'appareil doit accepter tout brouillage radioélectrique subi, même si le brouillage est susceptible d'en compromettre le fonctionnement.

FCC RF Exposure Statement: Specific Absorption Rate (SAR) is a measure of the rate of RF (radiofrequency) energy absorption by the body from the source being measured. This equipment has been found to be exempt from the RF Exposure SAR Evaluation when the device is installed such that a person's head will, in normal conditions, be 10mm away from the transmitter and antenna of the device.

Caution: The user is cautioned that changes or modifications not expressly approved by the party responsible for compliance could void the user's authority to operate the equipment.

Note: This equipment has been tested and found to comply with the limits for a Class B digital device, pursuant to part 15 of the FCC Rules. These limits are designed to provide reasonable protection against harmful interference in a residential installation. This equipment generates uses and can radiate radio frequency energy and, if not installed and used in accordance with the instructions, may cause harmful interference to radio communications. However, there is no guarantee that interference will not occur in a particular installation. If this equipment does cause harmful interference to radio or television reception, which can be determined by turning the equipment off and on, the user is encouraged to try to correct the interference by one or more of the following measures:
—Reorient or relocate the receiving antenna.
—Increase the separation between the equipment and receiver.
—Connect the equipment into an outlet on a circuit different from that to which the receiver is connected.
—Consult the dealer or an experienced radio/ TV technician for help

© 2021 Current Lighting Solutions, LLC. All rights reserved. GE and the GE monogram are trademarks of the General Electric Company and are used under license. Information provided is subject to change without notice. All values are design or typical values when measured under laboratory conditions.