# WWD2-4IW

Daintree® Networked
Wireless Wall Dimmer

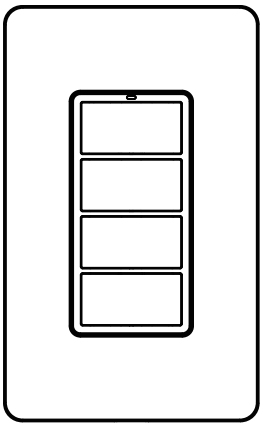

## Product Overview

The Daintree® Wireless Wall Dimmer is a battery-powered wall switch for use in a Daintree Networked or Daintree EZ Connect application. The WWD2-4IW device installs into an existing junction box to replace the existing wall-mounted switch with a wireless solution that enables dimming and on/off commands to be delivered to the luminaires in its commissioned space. The communication with the Daintree system utilizes a secure and reliable wireless connection which helps minimize installation costs and complexity.

## STOP BEFORE YOU BEGIN

Read these instructions completely and carefully.
Save these instructions for future use.

**⚠ WARNING / AVERTISSEMENT**

**RISK OF ELECTRIC SHOCK**
- Disconnect power before service installation, or maintenance of the product.

**RISK OF FIRE**
- Follow all relevant IEC or UL instructions and local building codes.

**RISK OF INJURY**
- Wear safety glasses and gloves during installation and servicing.

## Prepare Electrical Wiring

*Electrical Requirements*
- In case of Digital bus miswiring, mains can be present Installation.

*Grounding Instructions*
- The grounding and bonding of the overall system shall be done in accordance to the local electric code of the country where the device is installed.

## IMPORTANT

To ensure the product warranty is valid, please ensure all installation instructions and environmental conditions for storage and operation are complied with.
Installation to be performed by factory trained or qualified personnel.

## Save These Instructions

Use only in the manner intended by the manufacturer. If you have any questions, contact the manufacturer.

# Installation of Back Housing onto Junction Box

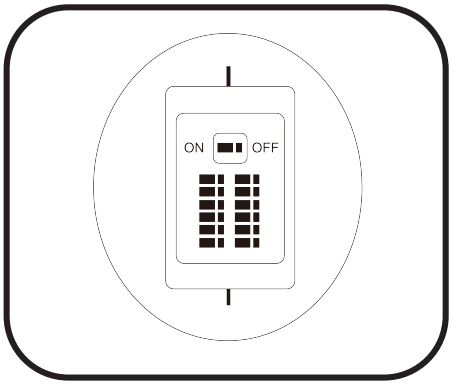


1 Disconnect power to the junction box

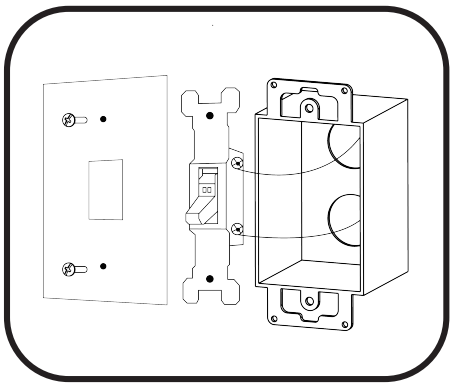

2 Remove the junction box cover plate

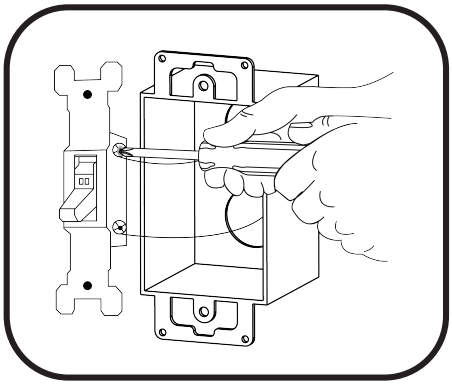

3 Uninstall existing wall switches from the junction box.

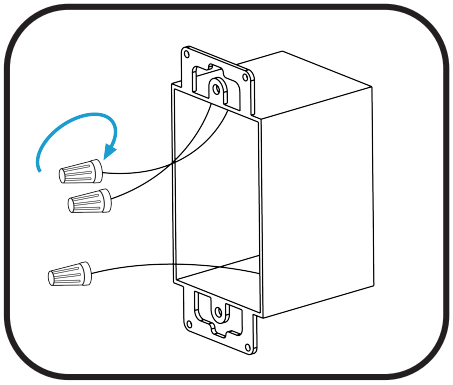

4 Reconnect wires (previously connected to wall switch) with wire nuts.

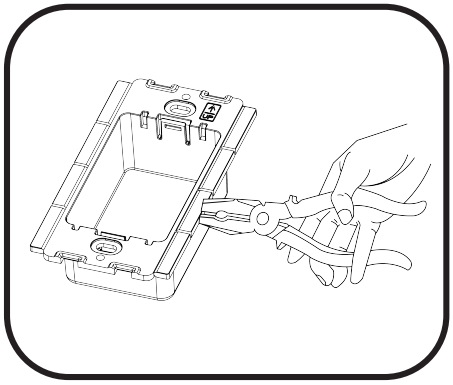

5 For proper installation into a dual gang junction box, the tabs between adjacent back housings must be removed. Carefully observe the correct orientation (the UP arrow should be in the upper right corner on each back housing). After double checking the product orientation, break off the necessary tabs using pliers.

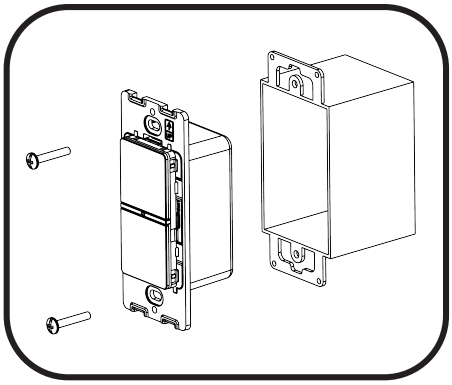

6 Install the back housing(s) of the wall dimmer(s) into the wall box.

**DOUBLE CHECK PRODUCT ORIENTATION BEFORE BREAKING OFF TABS.**
The wall dimmer will only install into the back housing in one orientation. Break off tabs only after the correct product orientation has been confirmed.

# Installation

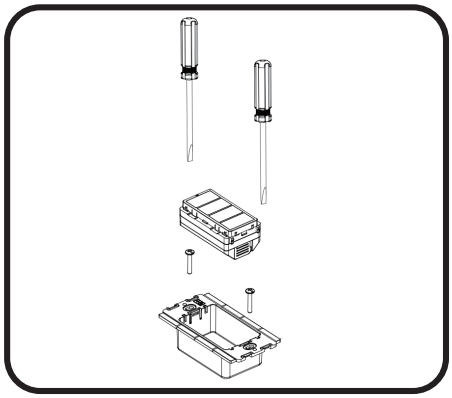

1 Use a standard screwdriver to remove the devices from the back housing

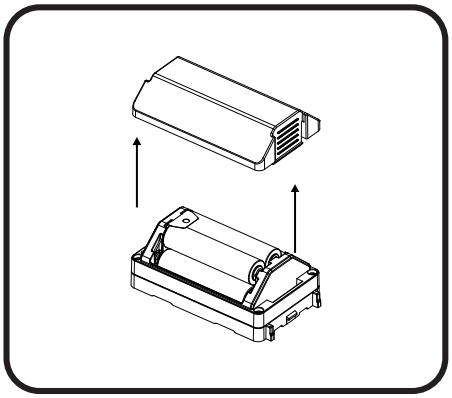

2 Separate the battery cover from the device. Pull the plastic insulation strip out of the battery compartment. Put the battery cover back on the device.

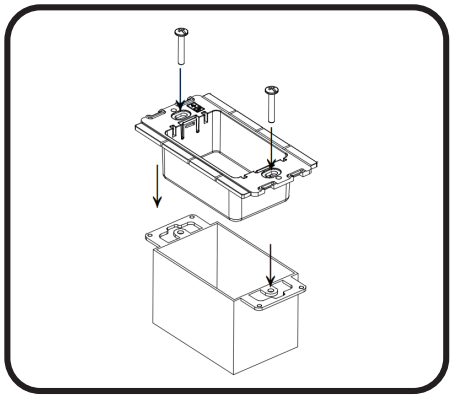

3 Insert the back housing piece into the junction box and secure with two screws.

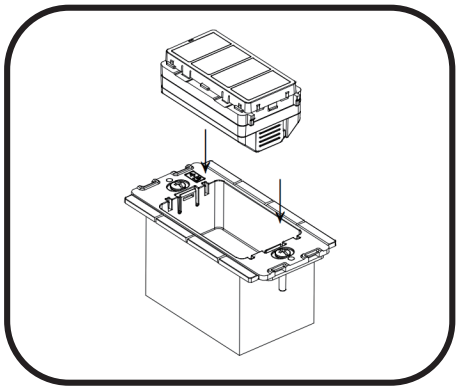

4 Install the main body of the device into the back housing.

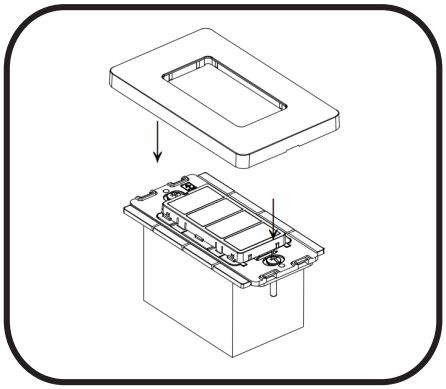

5 Install the faceplate onto the device. Note: Device supports the use of other standard faceplates on the market.

# Network Reset

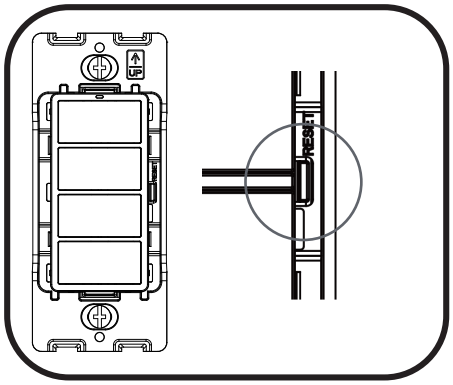


To reset the network of the device, remove the faceplate from the device. Then press and hold the reset button for 5 seconds. Install the faceplate back onto the device. Press either dimming up or down button to enter the pairing mode to join the device to a network.

## Personality Change

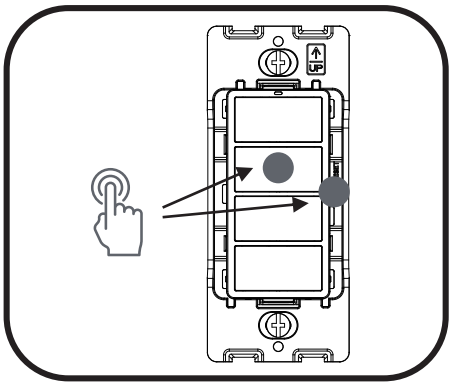


1. Hold the reset button and 2nd button for 5sec to change the personality to dual zone mode.

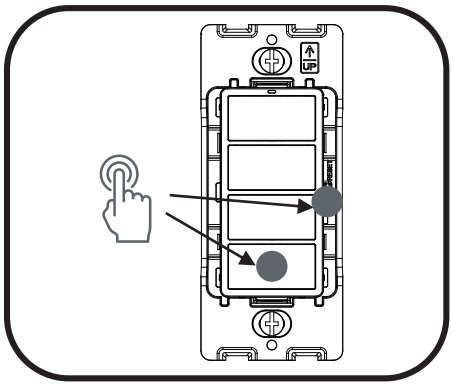


2. Hold the reset button and 4th button for 5sec to change the personality to scene mode.

## Button Change

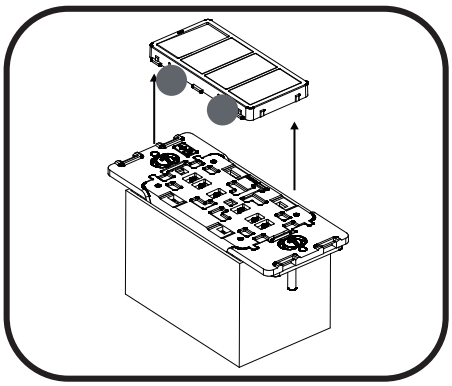

1. Squeeze the clip on the side of the button to take off the button module from the devices

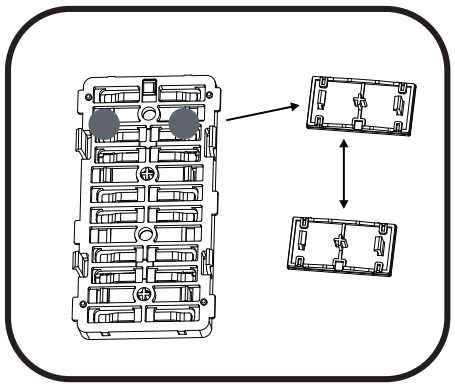

2. Remove the individual buttons and replace with the new set of buttons.

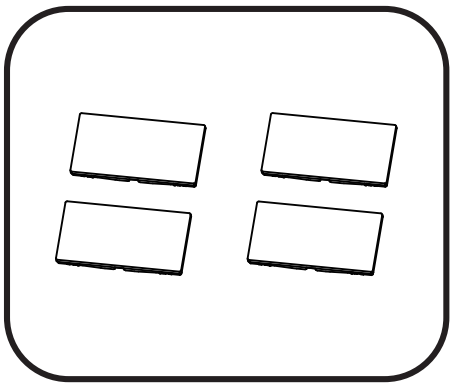

3. Please contact your agent if you would like customized buttons.

## Battery Replacement

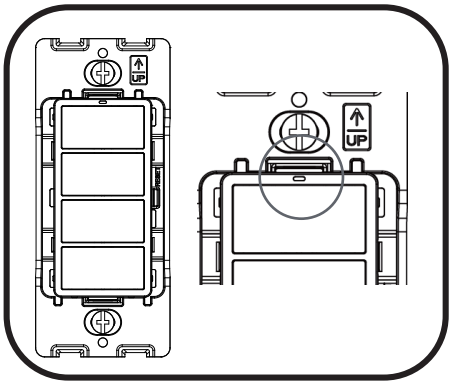


1 The device's LED flashing every 30 seconds indicates that the batteries need to be replaced.

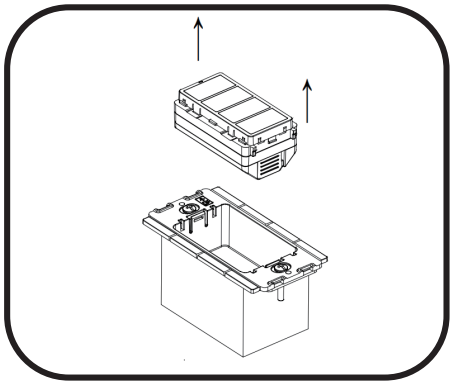

2 Remove the device from the back housing.

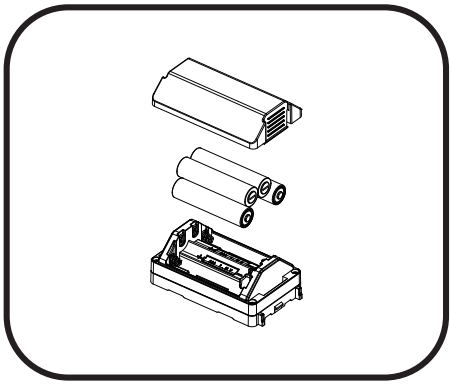

3 Separate the battery cover from the device. Replace the batteries with AAA batteries. All batteries need to be replaced at the same time.

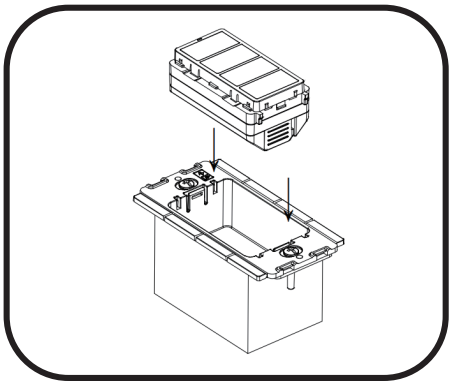

4 Install the main body of the device into the back housing.

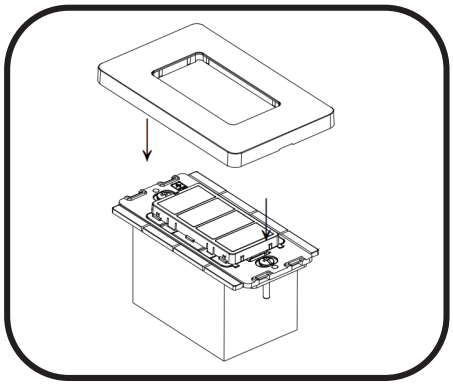

5 Install the faceplate onto the device. The device will rejoin its network automatically.

## Product Dimensions

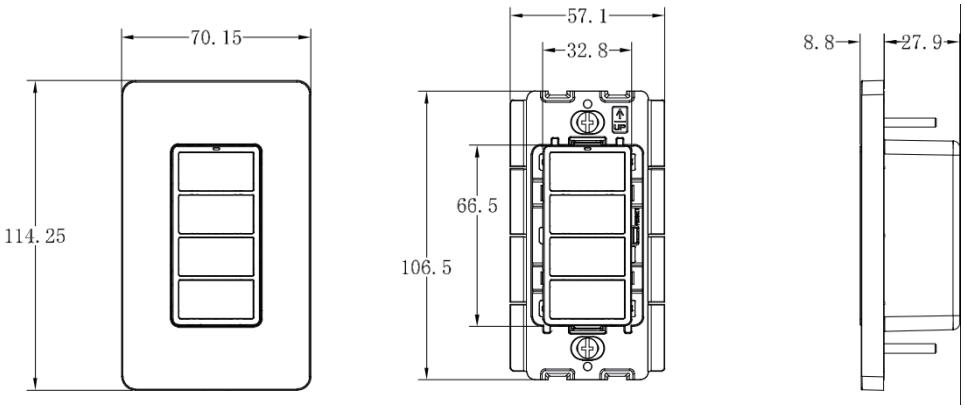

# Product Operation

## Button Functionality

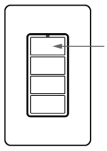

### First Button

| | |
|---|---|
| **Short press** | Lights ON at previous level |
| **Double short press** | Lights ON at 100% output |
| **Hold** | Turn ON and dim up |

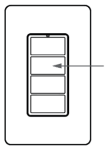

### Second Button

| | |
|---|---|
| **Short press** | Lights OFF |
| **Double short press** | Lights ON at the lowest output |
| **Hold** | Dim down when lights ON |

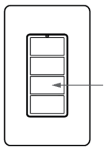

### Third Button

| | |
|---|---|
| **Short press** | Lights ON at previous level |
| **Double short press** | Lights ON at 100% output |
| **Hold** | Turn ON and dim up |

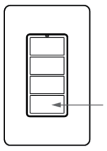

### Forth Button

| | |
|---|---|
| **Short press** | Lights OFF |
| **Double short press** | Lights ON at the lowest output |
| **Hold** | Dim down when lights ON |

## LED Indicator

| | |
|---|---|
| **Rapid flash (12 times per second) for up to 30 seconds** | Device is trying to join a ZigBee network |
| **Solid ON for 10 seconds** | Device successfully joined a ZigBee network |
| **Flashes once (100ms duration)** | Device has been activated while in the network |
| **Flashes ON 2 seconds every 30 seconds** | Batteries need to be replaced |
| **Flashes twice (100ms duration)** | Device has been in zone personality |
| **Flashes four times (100ms duration)** | Device has been in scene personality |

# Technical Data

## Product Specifications

| | |
|---|---|
| **Dimensions** | 114mm H x 70mm W x 36mm D |
| **Weight** | 130g |
| **Power Supply** | (4) AAA1.5V battery |
| **battery life** | 5yr (normal operation) |
| **Operating Environment** | -10°C to 40°C （Indoor Use Only) |
| **Status indicator** | Network joined/Button triggered |
| **Mounting** | Surface mounted, screw hole in backplate, cover could be removed |
| **Warranty** | 5 years |

## Product Availablity

| SKU | DESCRIPTION | ARTICLE NO |
|---|---|---|
| 93141338 | Daintree® Networked Wireless Wall Dimmer | WWD2-4IW |

## Product Certifications

c UL us LISTED Sensing Control E486320

FCC ID: 2AS3F-WWD2IW
IC: 25008-WWD2IW

# Supplier's Declaration of Conformity

## 47 CFR § 2.1077 Compliance Information

Product Name: Wireless Wall Dimmer
Model No: WWD2-4IW
Supplier's Name: Current Lighting Solutions, LLC
Supplier's Website: www.gecurrent.com
Supplier's Address (USA): Cleveland, Ohio
Supplier's Phone: 1-866-855-8629

This device complies with part 15 of the FCC Rules. Operation is subject to the following two conditions:
(1) This device may not cause harmful interference, and
(2) this device must accept any interference received, including interference that may cause undesired operation.

This device contains license-exempt transmitter(s)/receiver(s) that comply with Innovation, Science and Economic Development Canada's license-exempt RSS(s). Operation is subject to the following two conditions:
(1) This device may not cause interference.
(2) This device must accept any interference including interference that may cause undesired operation of the device.

L'émetteur/récepteur exempt de licence contenu dans le présent appareil est conforme aux CNR d'Innovation, Sciences et Développement économique Canada applicables aux appareils radio exempts de licence. L'exploitation est autorisée aux deux conditions suivantes:
(1) L'appareil ne doit pas produire de brouillage;
(2) L'appareil doit accepter tout brouillage radioélectrique subi, même si le brouillage est susceptible d'en compromettre le fonctionnement.

FCC RF Exposure Statement: Specific Absorption Rate (SAR) is a measure of the rate of RF (radiofrequency) energy absorption by the body from the source being measured. This equipment has been found to be exempt from the RF Exposure SAR Evaluation when the device is installed such that a person's head will, in normal conditions, be 10mm away from the transmitter and antenna of the device.

Caution: The user is cautioned that changes or modifications not expressly approved by the party responsible for compliance could void the user's authority to operate the equipment.

Note: This equipment has been tested and found to comply with the limits for a Class B digital device, pursuant to part 15 of the FCC Rules. These limits are designed to provide reasonable protection against harmful interference in a residential installation. This equipment generates uses and can radiate radio frequency energy and, if not installed and used in accordance with the instructions, may cause harmful interference to radio communications. However, there is no guarantee that interference will not occur in a particular installation. If this equipment does cause harmful interference to radio or television reception, which can be determined by turning the equipment off and on, the user is encouraged to try to correct the interference by one or more of the following measures:
—Reorient or relocate the receiving antenna.
—Increase the separation between the equipment and receiver.
—Connect the equipment into an outlet on a circuit different from that to which the receiver is connected.
—Consult the dealer or an experienced radio/ TV technician for help



© 2021 Current Lighting Solutions, LLC. All rights reserved. GE and the GE monogram are trademarks of the General Electric Company and are used under license. Information provided is subject to change without notice. All values are design or typical values when measured under laboratory conditions.