LTA
243 Jubug-Ri,Yangji-Myeon, Yongin-Si, Gyeonggi-Do, Korea 449-822
Tel: +82-31-323-6008 Fax: +82-31-323-6010
http://www.ltalab.com

SAR TEST REPORT

Equipment Under Test	:	Digital Transmission System (DTS)
Model Name	:	HnJ-350E
Trade Mark	:	FurunHealthcare
Applicant	:	FurunHealthcare Co.,Ltd.
Address of Applicant	:	(Gangwon-Technopark), 206, 130-2, Donghwagongdan-ro, Munmak-eup, Wonju-si, Gangwon-do, Korea
FCC ID	:	2AS4MHNJ-350E
Date of Receipt	:	2019-04-22
Date of Test(s)	:	2019-04-22 ~ 2019-04-23
Date of Issue	:	2019-04-23
Max.SAR(1g)	:	0.322 W/kg

Standards: **KDB Publication 447498**
IEEE 1528, 2013
ANSI/IEEE C95.1, C95.3

In the configuration tested, the EUT complied with the standards specified above.

Remarks:

This report details the results of the testing carried out on one sample, the results contained in this test report do not relate to other samples of the same product. The manufacturer should ensure that all products in series production are in conformity with the product sample detailed in this report.
This report may only be reproduced and distribute in full. If the product in this report is used in any configuration other than that detailed in the report, the manufacturer must ensure the new system complies with all relevant standards. Any mention of LTA Co., Ltd. Or testing done by LTA Co.,Ltd. In connection with distribution or use of the product described in this report must be approved by LTA Co.,Ltd. In writing.

Tested by : **Eun-Hwan Jung** **2019-04-23**

Approved by : **Ja-Beom Koo** **2019-04-23**

Copyright © 2019, LTA Co., Ltd.

Contents

1. EXECUTIVE SUMMARY & EUT INFORMATION 3

2. INTRODUCTION 4

3. SAR MEASUREMENT SETUP 5

4. ANSI/IEEE C95.1-2005 RF EXPOSURE LIMIT 16

5. SYSTEM AND LIQUID VALIDATION 17

6. TYPE A MEASUREMENT UNCERTAINTY 21

7. OUTPUT POWER VERIFICATION 23

8. SAR TEST RESULTS 24

ANNEX A. TEST INSTRUMENT 38

ANNEX B. EUT AND TEST SETUP PHOTOGRAPHS 39

ANNEX C. CALIBRATION REPORTS 45

Copyright © 2019, LTA Co., Ltd.

1. Executive Summary & EUT Information

The purpose of this test programmed was to demonstrate compliance of the Intermec Technologies Corporation Model: 1005CP01 against the current Stipulated Standards. The Mobile Computer have demonstrated compliance with the C95.1 , IEEE 1528, OET Bulletin 65 Supplement C , RSS-102 Issue 4 and Safety Code 6. The test has demonstrated that this unit complies with stipulated standards.

EUT information	
EUT Description	Digital Transmission System (DTS)
Model No.	HnJ-350E
Variant No.	HnJ-350K
Serial No.	Identical prototype
Mode of Operations	802.11 b, g, n20
Body-Worn Accessory	None
TX Frequency Range	2412 MHz ~ 2462 MHz
Conducted Max Power	802.11 b : 22.23 dBm 802.11 g : 21.57 dBm 802.11 n20 : 22.04 dBm
Battery Type	DC 3.7 V

Antenna Location

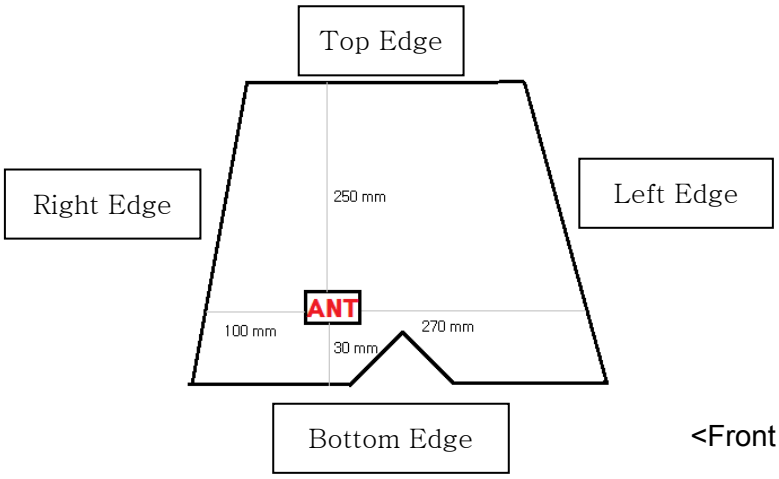

<Front view>

2. Introduction

Introduction

This measurement report shows compliance of the EUT with FCC OET Bulletin 65 Supplement C (Edition 01-01) & RSS 102 Issue 4.0.
The test procedures, as described in ANSI C95.1 – 2005 Standard for Safety Levels with Respect to Human Exposure to Radio Frequency Electromagnetic Fields, 3 kHz to 300 GHz [2], and ANSI C95.3 – 2002 Recommended Practice for the Measurement of Potentially Hazardous Electromagnetic Fields [3], were employed.

SAR Definition

Specific Absorption Rate is defined as the time derivative (rate) of the incremental energy (dW) absorbed by (dissipated in) an incremental mass (dm) contained in a volume element (dV) of a given density (ρ).

$$SAR = \frac{d}{dt}\left(\frac{dW}{dm}\right) = \frac{d}{dt}\left(\frac{dW}{\rho dV}\right)$$

SAR is expressed in units of watts per kilogram (W/kg). SAR can be related to the electric field at a point by

$$SAR = \frac{\sigma \mid E \mid^2}{\rho}$$

where:

σ = conductivity of the tissue (S/m)
ρ = mass density of the tissue (kg/m3)
E = rms electric field strength (V/m)

Copyright © 2019, LTA Co., Ltd.

3. SAR Measurement Setup

Dosimetric Assessment System

These measurements were performed with the automated near-field scanning system OPENSAR from SATIMO. The system is based on a high precision robot (working range: 850 mm), which positions the probes with a positional repeatability of better than ± 0.02 mm. Special E- and H-field probes have been developed for measurements close to material discontinuity, the sensors of which are directly loaded with a Schottky diode and connected via highly resistive lines to the data acquisition unit.

The SAR measurements were conducted with dosimetric probe (manufactured by SATIMO), designed in the classical triangular configuration and optimized for dosimetric evaluation. The probe has been calibrated according to the procedure described in SAR standard with accuracy of better than ±10%. The spherical isotropy was evaluated with the procedure described in SAR starndard and found to be better than ±0.25 dB. The phantom used was the SAM Phantom as described in FCC supplement C, IEEE P1528 and CENELEC EN62209-1.

Measurement System Diagram

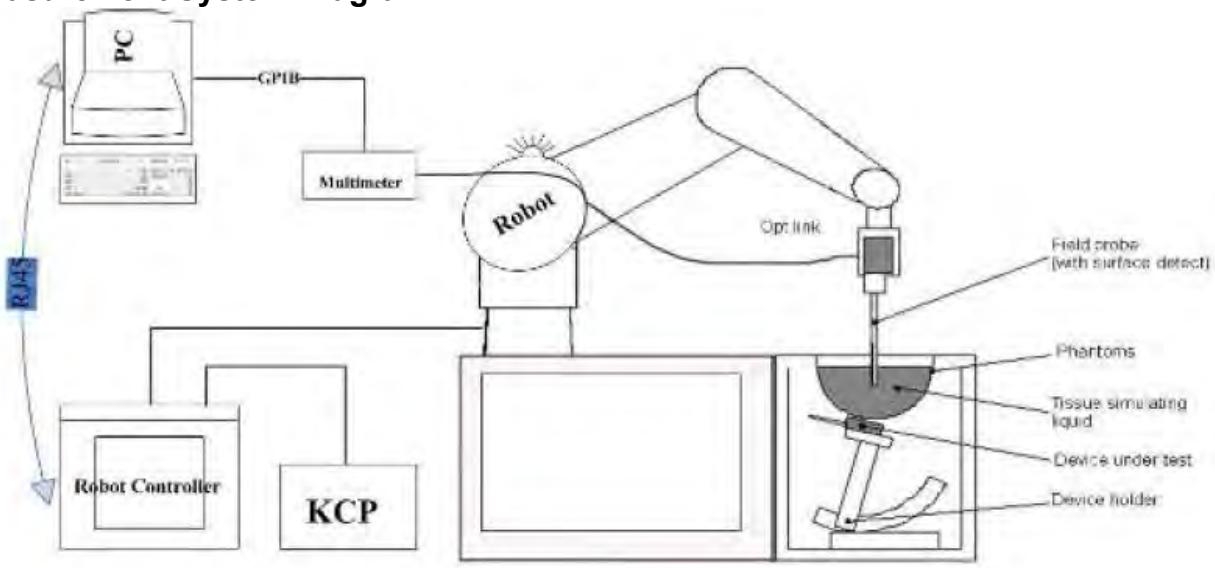

The OPENSAR system for performing compliance tests consist of the following items:

1. A standard high precision 6-axis robot (KUKA) with controller and software.
2. KUKA Control Panel (KCP).
3. A dosimetric probe, i.e., an isotropic E-field probe optimized and calibrated for usage in tissue simulating liquid. The probe is equipped with an optical surface detector system.
4. The functions of the PC plug-in card are to perform the time critical task such as signal filtering, surveillance of the robot operation fast movement interrupts.
5. A computer operating Windows XP.
6. OPENSAR software.
7. Remote control with teaches pendant and additional circuitry for robot safety such as warning lamps, etc.
8. The SAM phantom enabling testing left-hand right-hand and body usage.
9. The Position device for handheld EUT.
10. Tissue simulating liquid mixed according to the given recipes (see Application Note).
11. System validation dipoles to validate the proper functioning of the system.

EPG227 Probe

Construction Symmetrical design with triangular Core. Built-in shielding against static charges Calibration in air from 100 MHz to 2.5 GHz. In brain and muscle simulating tissue at frequencies from 800 to 6000 MHz (accuracy of 8%) .

Frequency 100 MHz to 6 GHz;
Linearity ; 0.25 dB (100 MHz to 6 GHz) ,
Directivity : 0.25 dB in brain tissue (rotation around probe axis) 0.5 dB in brain tissue (rotation normal probe axis)
Dynamic : 0.001W/kg to > 100W/kg;
Range Linearity: 0.25 dB
Surface : 0.2 mm repeatability in air and liquids
Dimensions Overall length: 330 mm
Tip length: 16 mm
Body diameter: 8 mm
Tip diameter: 2.6 mm
Distance from probe tip to dipole centers: <1.5 mm
Application General dosimetric up to 6 GHz
Compliance tests of mobile phones
Fast automatic scanning in arbitrary phantoms

The SAR measurements were conducted with the dosimetric probe designed in the classical triangular configuration and optimized for dosimetric evaluation. The probe is constructed using the thick film technique, with printed resistive lines on ceramic substrates.
It is connected to the KRC box on the robot arm and provides an automatic detection of the phantom surface. The 3D file of the phantom is include in OpenSAR software. The Video Positioning System allow the system to take the automatic reference and to move the probe safely and accurately on the phantom.

Copyright © 2019, LTA Co., Ltd.

E-Field Probe Calibration Process

Each probe is calibrated according to a dosimetric assessment procedure described in SAR standard with accuracy better than +/- 10%. The spherical isotropy was evaluated with the procedure described in SAR standard and found to be better than +/-0.25dB. The sensitivity parameters (NormX, NormY, NormZ), the diode compression parameter (DCP) and the conversion factor (ConvF) of the probe are tested. The free space E-field from probe outputs is determined in a test chamber. This is performed in a TEM cell for frequencies bellow 0.8 GHz, and in a waveguide above 0.8 GHz for free space. For the free space calibration, the probe is placed in the volumetric center of the cavity and at the proper orientation with the field. E-field correlation calibration is performed in a flat phantom filled with the appropriate simulated brain tissue.

SAM Phantom

The ELLI Phantom ELLI25 is constructed of a fiberglass shell integrated in a wooden table. The shape of the shell is in compliance with the specification set in IEEE P1528 and CENELEC EN62209-2. The phantom enables the dosimetric evaluation of left and right hand phone usage as well as body mounted usage at the flat phantom region.
A cover prevents the evaporation of the liquid.
Reference markings on the Phantom allow the complete setup of all predefined phantom positions and measurement grids by manually teaching three points in the robot.
Shell Thickness: 2˜˜ 0.2 mm
Filling Volume: Approx. 25 liters
Dimensions (H x L x W): 600 x 400 x 200 mm
Liquid is filled to at least 15mm from the bottom of Phantom.

Device Holder

In combination with the Generic Twin Phantom V3.0, the Mounting Device enables the rotation of the mounted transmitter in spherical coordinates whereby the rotation points is the ear opening. The devices can be easily, accurately, and repeatedly positioned according to the FCC and CENELEC specifications. The device holder can be locked at different phantom locations (left head, right head, flat phantom).

Note: A simulating human hand is not used due to the complex anatomical and geometrical structure of the hand that may produced infinite number of configurations [10]. To produce the worst-case condition (the hand absorbs antenna output power), the hand is omitted during the tests.

Copyright © 2019, LTA Co., Ltd.

Data Evaluation

The OPENSAR software automatically executes the following procedure to calculate the field units from the microvolt readings at the probe connector. The parameters used in the valuation are stored in the configuration modules of the software:

Probe Parameters	- Sensitivity	Normi
	- Conversion factor	ConvFi
	- Diode compression point Dcpi	
Device Parameters	- Frequency	f
	- Crest factor	cf
Media Parameters	- Conductivity	σ
	- Density	ρ

These parameters must be set correctly in the software. They can either be found in the component documents or be imported into the software from the configuration files issued for the OPENSAR components.

The first step of the evaluation is a linearization of the filtered input signal to account for the compression characteristics of the detector diode. The compensation depends on the input signal, the diode type and the DC-transmission factor from the diode to the evaluation electronics. If the exciting field is pulsed, the crest factor of the signal must be known to correctly compensate for peak power. The formula for each channel can be given as

$$V_i = U_i + U_i^2 \cdot \frac{cf}{dcp_i}$$

Where V_i = Compensated signal of channel i (i = x, y, z)
U_i = Input signal of channel i (i = x, y, z)
cf = Crest factor of exciting field (DASY parameter)
dcp_i = Diode compression point (DASY parameter)

From the compensated input signals the primary field data for each channel can be evaluated:

E-field probes: $$E_i = \sqrt{\frac{V_i}{Norm_i \cdot ConvF}}$$

H-field probes: $$H_i = \sqrt{Vi} \cdot \frac{a_{i0} + a_{i1} f + a_{i2} f^2}{f}$$

Where V_i = Compensated signal of channel i (i = x, y, z)
$Norm_i$ = Sensor sensitivity of channel i (i = x, y, z)
μV/(V/m)2 for E0field Probes
ConvF = Sensitivity enhancement in solution
a_{ij} = Sensor sensitivity factors for H-field probes

f = *Carrier frequency (GHz)*
E_i = *Electric field strength of channel i in V/m*
H_i = *Magnetic field strength of channel i in A/m*

The RSS value of the field components gives the total field strength (Hermitian magnitude):

$$E_{tot} = \sqrt{E_x^2 + E_y^2 + E_z^2}$$

The primary field data are used to calculate the derived field units.

$$SAR = E_{tot}^2 \cdot \frac{\sigma}{\rho \cdot 1000}$$

where SAR = *local specific absorption rate in mW/g*
E_{tot} = *total field strength in V/m*
σ = *conductivity in [mho/m] or [siemens/m]*
ρ = *equivalent tissue density in g/cm3*

Note that the density is normally set to 1 (or 1.06), to account for actual brain density rather than the density of the simulation liquid.

The power flow density is calculated assuming the excitation field as a free space field.

$$P_{pwe} = \frac{E_{tot}^2}{3770} \quad \text{or} \quad P_{pwe} = H_{tot}^2 \cdot 37.7$$

where P_{pwe} = *Equivalent power density of a plane wave in mW/cm2*
E_{tot} = *total electric field strength in V/m*
H_{tot} = *total magnetic field strength in A/m*

SAR Evaluation – Peak Spatial - Average

The procedure for assessing the peak spatial-average SAR value consists of the following steps

- **Power Reference Measurement**
  The reference and drift jobs are useful jobs for monitoring the power drift of the device under test in the batch process. Both jobs measure the field at a specified reference position, at a selectable distance from the phantom surface. The reference position can be either the selected section's grid reference point or a user point in this section. The reference job projects the selected point onto the phantom surface, orients the probe perpendicularly to the surface, and approaches the surface using the selected detection method.
- **Area Scan**
  The area scan is used as a fast scan in two dimensions to find the area of high field values, before doing a finer measurement around the hot spot. The sophisticated interpolation routines implemented in OPENSAR software can find the maximum locations even in relatively coarse grids. The scan area is defined by an editable grid. This grid is anchored at the grid reference point of the selected section in the phantom. When the area scan's property sheet is brought-up, grid was at to 15 mm by 15 mm and can be edited by a user.
- **Zoom Scan**
  Zoom scans are used to assess the peak spatial SAR values within a cubic averaging volume containing 1 g and 10 g of simulated tissue. The default zoom scan measures 5 x 5 x 7 points within a cube whose base faces are centered around the maximum found in a preceding area scan job within the same procedure. If the preceding Area Scan job indicates more then one maximum, the number of Zoom Scans has to be enlarged accordingly (The default number inserted is 1).
- **Power Drift measurement**
  The drift job measures the field at the same location as the most recent reference job within the same procedure, and with the same settings. The drift measurement gives the field difference in dB from the reading conducted within the last reference measurement. Several drift measurements are possible for one reference measurement. This allows a user to monitor the power drift of the device under test within a batch process. In the properties of the Drift job, the user can specify a limit for the drift and have OPENSAR software stop the measurements if this limit is exceeded.

SAR Evaluation – Peak SAR

The procedure for spatial peak SAR evaluation has been implemented according to the IEEE1529 standard. It can be conducted for 1 g and 10 g. The OPENSAR system allows evaluations that combine measured data and robot positions, such as:

- maximum search
- extrapolation
- boundary correction
- peak search for averaged SAR

During a maximum search, global and local maximum searches are automatically performed in 2-D after each Area Scan measurement with at least 6 measurement points. It is based on the evaluation of the local SAR gradient calculated by the Quadratic Shepard's method. The algorithm will find the global maximum and all local maxima within -2 dB of the global maxima for all SAR distributions.

Extrapolation

Extrapolation routines are used to obtain SAR values between the lowest measurement points and the inner phantom surface. The extrapolation distance is determined by the surface detection distance and the probe sensor offset. Several measurements at different distances are necessary for the extrapolation.
They are used in the Cube Scan to obtain SAR values between the lowest measurement points and the inner phantom surface. The routine uses the fourth order least square polynomial method for extrapolation. For a grid using 5x5x7 measurement points with 5mm resolution amounting to 343 measurement points, the uncertainty of the extrapolation routines is less than 1% for 1 g and 10 g cubes.

Copyright © 2019, LTA Co., Ltd.

Definition of Reference Points

Ear Reference Point

Figure 6.2 shows the front, back and side views of the SAM Phantom. The point “M” is the reference point for the center of the mouth, “LE” is the left ear reference point (ERP), and “RE” is the right ERP. The ERPs are 15mm posterior to the entrance to the ear canal (EEC) along the B-M line (Back-Mouth), as shown in Figure 6.1. The plane passing through the two ear canals and M is defined as the Reference Plane. The line N-F (Neck-Front) is perpendicular to the reference plane and passing through the RE (or LE) is called the Reference Pivoting Line (see Figure 6.1). Line B-M is perpendicular to the N-F line. Both N-F and B-M lines are marked on the external phantom shell to facilitate handset positioning.

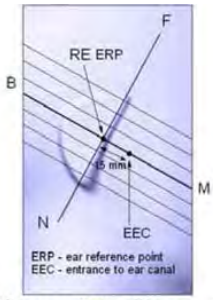

Figure 6.1 Close-up side view of ERP’s

Figure 6.2 Front, back and side view of SAM

Device Reference Points

Two imaginary lines on the device need to be established: the vertical centerline and the horizontal line. The test device is placed in a normal operating position with the “test device reference point” located along the “vertical centerline” on the front of the device
aligned to the “ear reference point” (See Fig. 6.3). The “test device reference point” is than located at the same level as the center of the ear reference point. The test device is positioned so that the “vertical centerline” is bisecting the front surface of the device at it’s top and bottom edges, positioning the “ear reference point” on the outer surface of both the left and right head phantoms on the ear reference point.

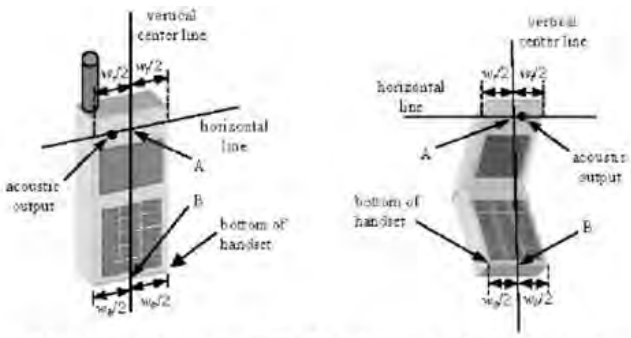

Figure 6.3 Handset Vertical Center & Horizontal Line Reference Points

Test Configuration – Positioning for Cheek / Touch

1. Position the device close to the surface of the phantom such that point A is on the (virtual) extension of the line passing through points RE and LE on the phantom (see Figure below), such that the plane defined by the vertical center line and the horizontal line of the device is approximately parallel to the sagittal plane of the phantom

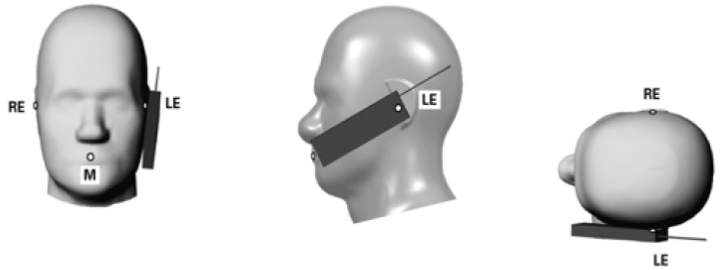

Figure 7.1 Front, Side and Top View of Cheek/Touch Position

2. Translate the device towards the phantom along the line passing through RE and LE until the device touches the ear.
3. While maintaining the device in this plane, rotate it around the LE-RE line until the vertical centerline is in the plane normal to MB-NF including the line MB (called the reference plane).
4. Rotate the device around the vertical centerline until the device (horizontal line) is symmetrical with respect to the line NF.
5. While maintaining the vertical centerline in the reference plane, keeping point A on the line passing through RE and LE and maintaining the device contact with the ear, rotate the device about the line NF until any point on the device is in contact with a phantom point below the ear (cheek). See Figure below.

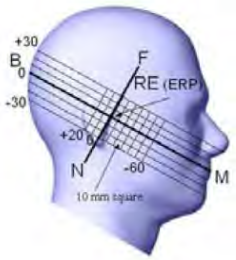

Figure 7.2 Side view w/ relevant markings

Test Configuration – Positioning for Ear / 15° Tilt

With the test device aligned in the Cheek/Touch Position":

1. While maintaining the orientation of the device, retracted the device parallel to the reference plane far enough to enable a rotation of the device by 15 degrees.
2. Rotate the device around the horizontal line by 15 degrees.
3. While maintaining the orientation of the device, move the device parallel to the reference plane until any part of the device touches the head. (In this position, point A is located on the line RE-LE). The tilted position is obtained when the contact is on the pinna. If the contact is at any location other than the pinna, the angle of the device shall be reduced. The tilted position is obtained when any part of the device is in contact with the ear as well as a second part of the device is in contact with the head (see Figure below).

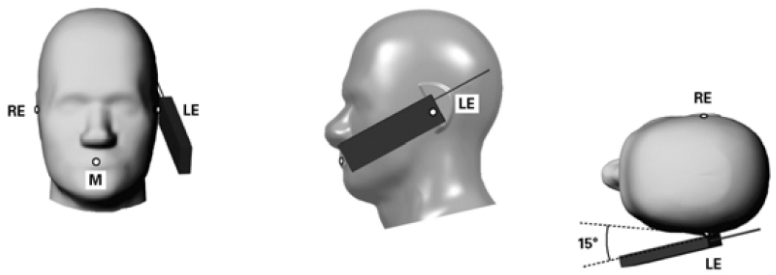

Figure 7.3 Front, Side and Top View of Ear/15˚ Tilt Position

Test position – Body Worn Configurations

Body-worn operating configurations are tested with the accessories attached to the device and positioned against a flat phantom in a normal use configuration. A device with a headset output is tested with a headset connected to the device. Body dielectric parameters are used.

Accessories for Body-worn operation configurations are divided into two categories: those that do not contain metallic components and those that do contain metallic components. When multiple accessories that do not contain metallic components are supplied with the device, the device is tested with only the accessory that dictates the closest spacing to the body. Then, when multiple accessories that contain metallic components are supplied with the device, the device is tested with each accessory that contains a unique metallic component. If multiple accessories share an identical metallic component (i.e. the same metallic belt-clip used with different holsters with no other metallic components) only the accessory that dictates the closest spacing to the body is tested.

Body-worn accessories may not always be supplied or available as options for some devices intended to be authorized for body worn use. In this case, a test configuration where a separation distance between the back of the device and the flat phantom is used. All test position spacings are documented.

Transmitters that are designed to operate in front of a person's face, as in push-to-talk configurations, are tested for SAR compliance with the front of the device positioned to face the flat phantom. For devices that are carried next to the body such as a shoulder, waist or chest-worn transmitters, SAR compliance is tested with the accessory(ies), including headsets and microphones, attached to the device and positioned against a flat phantom in a normal use configuration.

In all cases SAR measurements are performed to investigate the worst-case positioning. Worst-case positioning is then documented and used to perform Body SAR testing.

Copyright © 2019, LTA Co., Ltd.

Test position – Body-worn device

A typical example of a body-worn device is a mobile phone, wireless enabled PDA or other battery operated wireless device with the ability to transmit while mounted on a person's body using a carry accessory approved by the wireless device manufacture.
If the user instructions provided by the manufacturer specify intended use with a carry accessory (belt-clip, holster, carry-case or similar), the device shall be placed as intended in that carry accessory and the carry accessory shall be placed in the intended orientation against the flat phantom.

For carry accessories constructed from non conductive materials that are capable of holding the DUT at varying minimum distances to the phantom, the carry accessory providing the closest separation distance is expected to produce the highest SAR; therefore, testing of the carry accessories providing larger separation distances is not necessary. For carry accessories that do not contain conductive materials (e.g. metal), it is acceptable to substitute the carry accessory with an air-gap or a spacer that keeps the DUT at a distance from the phantom surface no greater than the distance provided by the carry accessory. The spacer shall be made of a low loss and low permittivity material with a loss tangent ≤ 0,005 and relative permittivity ≤ 1,1. Accessories that do not contain RF transmitters and have been proven to increase the peak SAR by less than 5 %, such as hands-free kits, do not need SAR tests separate from the SAR tests attached to a main DUT configuration. Annex G provides other information and rationale about hands-free kit testing.

If the user instructions provided by the manufacturer specify an intended use with an appropriate accessory at a certain separation distance to the body, the device shall be positioned as intended at the distance to the outer surface of the phantom that corresponds to the specified distance (Figure 5). When evaluating device SAR without a specific carry accessory, the separation distance shall not exceed 25 mm. The surface of the device pointing towards the flat phantom should be parallel to the surface of the phantom. However, all devices do not have a flat surface. Therefore the details of the device position, e.g. the definition of the distance and the physical relationship between the device and the phantom (see 6.1.4.1), shall be documented in the measurement report according to the manufacturer instructions.

If the intended use is not specified in the user instructions, the device shall be tested with all its surfaces directly against the flat phantom. The details of the device position, especially contact points to the surface of the phantom, shall be documented in the measurement report. If testing for one or more surfaces is omitted, this shall be documented with an associated rationale in the measurement report.

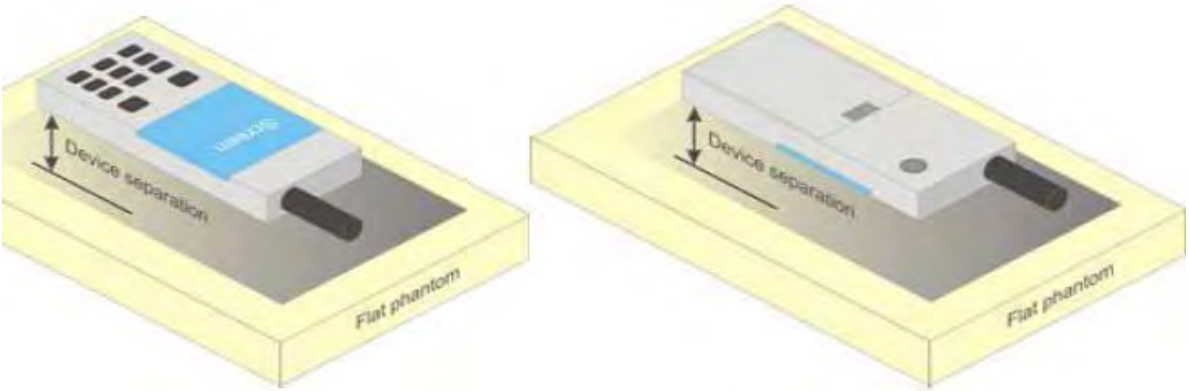

Figure 5 – Test positions for body-worn devices

Test position – Font-of-face device

A typical example of a front-of-face device is a two-yaw radio that is held at a distance from the face of the user when transmitting. In these cases the device under test shall be positioned at the distance to the phantom surface that corresponds to the intended use as specified by the manufacturer in the user instructions (Figure 9a). If the intended use is not specified, a separation distance of 25 mm between the phantom surface and the device shall be used.

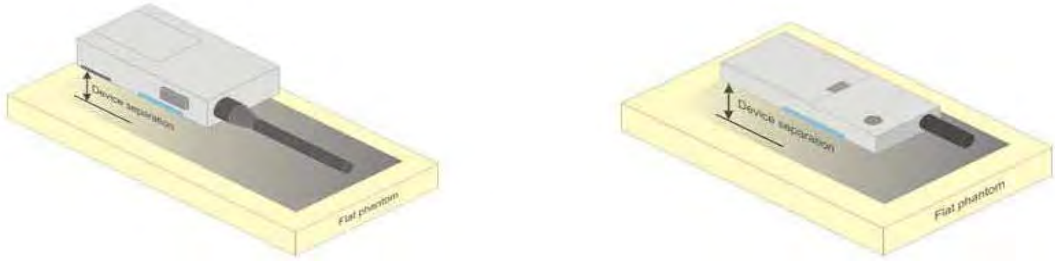

a) Two-way radios

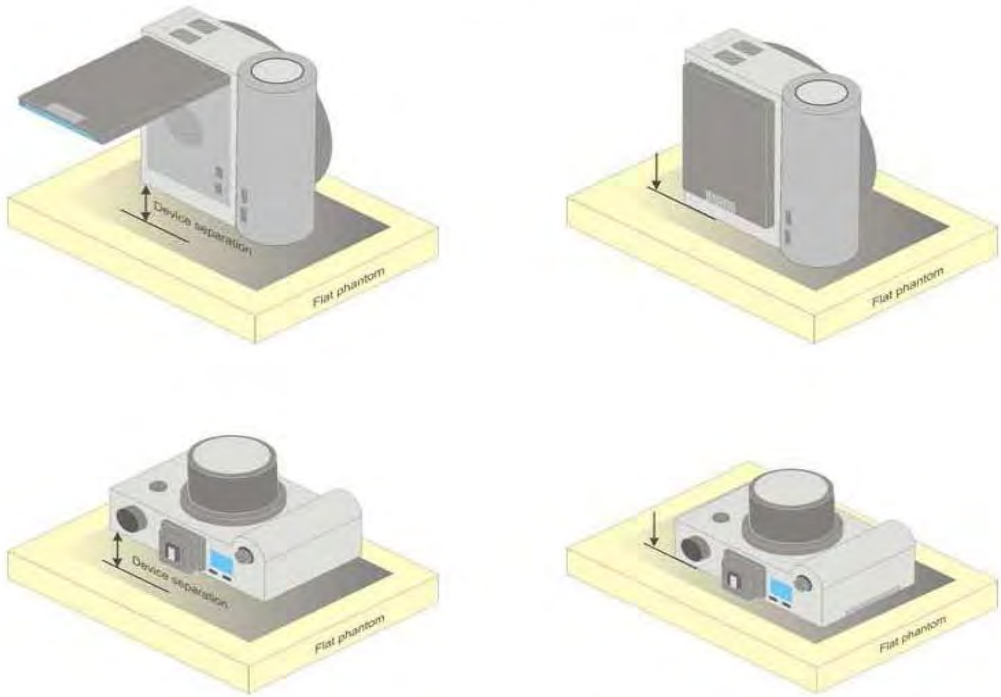

b) Still cameras and video cameras

Figure 9 – Test positions for front-of-face devices

Other devices that fall into this category include wireless-enabled still cameras and video cameras that can send data to a network of other device (Figure 9b). In the case of a device whose intended use requires a separation distance from the user (e.g., device with a viewing screen), this shall be positioned at the distance to the phantom surface that corresponds to the intended use as specified by the manufacturer in the user instructions (Figure 9b, left side). If the intended use is not specified, a separation distance of 25 mm between the phantom surface and the device shall be used.

For a device whose intended use requires the user's face to be in contact with the device (e.g., device with an optical viewfinder), this shall be placed directly against the phantom (Figure 9b, right side)

Copyright © 2019, LTA Co., Ltd.

4. ANSI/IEEE C95.1 – 2005 RF Exposure Limit

In order for users to be aware of the body-worn operating requirements for meeting RF exposure compliance, operating instructions and cautions statements are included in the user's manual.

Uncontrolled Environment

Uncontrolled Environments are defined as locations where there is the exposure of individuals who have no knowledge or control of their exposure. The general population/uncontrolled exposure limits are applicable to situations in which the general public may be exposed or in which persons who are exposed as a consequence of their employment may not be made fully aware of the potential for exposure or cannot exercise control over their exposure. Members of the general public would come under this category when exposure is not employment-related; for example, in the case of a wireless transmitter that exposes persons in its vicinity.

Controlled Environment

Controlled Environments are defined as locations where there is exposure that may be incurred by persons who are aware of the potential for exposure, (i.e. as a result of employment or occupation). In general, occupational/controlled exposure limits are applicable to situations in which persons are exposed as a consequence of their employment, who have been made fully aware of the potential for exposure and can exercise control over their exposure. This exposure category is also applicable when the exposure is of a transient nature due to incidental passage through a location where the exposure levels may be higher than the general population/uncontrolled limits, but the exposed person is fully aware of the potential for exposure and can exercise control over his or her exposure by leaving the area or by some other appropriate means.

FCC LIMITS FOR SPECIFIC ABSORPTION RATE (SAR)

(A) Limits for Occupational/Controlled Exposure (W/kg)

Whole-Body	Partial-Body	Hands, Wrists, Feet and Ankles
0.4	8.0	20.0

(B) Limits for General Population/Uncontrolled Exposure (W/kg)

Whole-Body	Partial-Body	Hands, Wrists, Feet and Ankles
0.08	1.6	4.0

NOTE 1: See Section 1 for discussion of exposure categories.

NOTE 2: *Whole-Body SAR* is averaged over the entire body, *partial-body SAR* is averaged over any 1 gram of tissue defined as a tissue volume in the shape of a cube. *SAR for hands, wrists, feet and ankles* is averaged over any 10 grams of tissue defined as a tissue volume in the shape of a cube.

NOTE 3: At frequencies above 6.0 GHz, SAR limits are not applicable and MPE limits for power density should be applied at 5 cm or more from the transmitting device.

Note 4: The time averaging criteria for field strength and power density do not apply to general population SAR limit of 47 CFR §2.1093.

5. System and Liquid Validation

System Validation

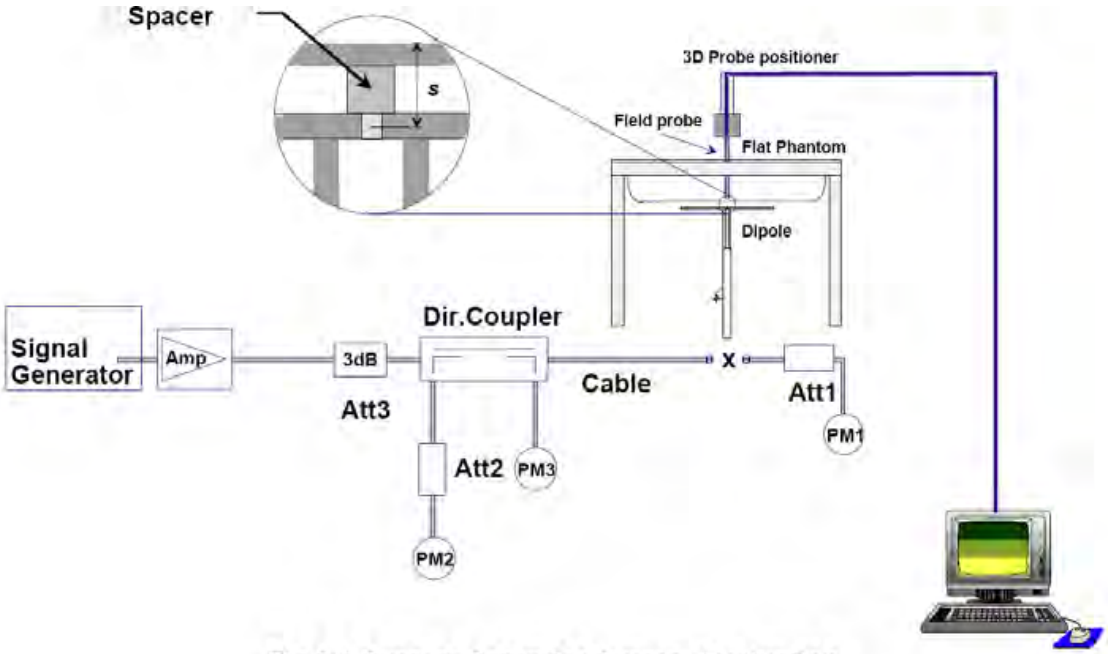

Fig 8.1 System Setup for System Evaluation

The system performance check verifies that the system operates within its specifications. System and operator errors can be detected and corrected. It is recommended that the system performance check be performed prior to any usage of the system in order to guarantee reproducible results. The system performance check uses normal SAR measurements in a simplified setup with a well characterized source. This setup was selected to give a high sensitivity to all parameters that might fail or vary over time. The system check does not intend to replace the calibration of the components, but indicates situations where the system uncertainty is exceeded due to drift or failure.

In the simplified setup for system evaluation, the DUT is replaced by a calibrated dipole and the power source is replaced by a continuous wave that comes from a signal generator. The calibrated dipole must be placed beneath the flat phantom section of the SAM twin phantom with the correct distance holder. The distance holder should touch the phantom surface with a light pressure at the reference marking and be oriented parallel to the long side of the phantom. The equipment setup is shown below:

1. Signal Generator
2. Amplifier
3. Directional Coupler
4. Power Meter
5. Calibrated Dipole

The output power on dipole port must be calibrated to 30 dBm (1000 mW) before dipole is connected.

The dipoles used is based on the IEEE-1528 standard, and is complied with mechanical and electrical specifications in line with the requirements of IEEE. The table below provides details for the mechanical and electrical Specifications for the dipoles.

Copyright © 2019, LTA Co., Ltd.

Numerical reference SAR values (W/kg) for reference dipole and flat phantom

Frequency (MHz)	1g SAR	10g SAR	Local SAR at surface (above feed-point)	Local SAR at surface (y=2cm offset from feed-point)
300	3.0	2.0	4.4	2.1
450	4.9	3.3	7.2	3.2
835	9.5	6.2	4.1	4.9
900	10.8	6.9	16.4	5.4
1450	29.0	16.0	50.2	6.5
1800	38.1	19.8	69.5	6.8
1900	39.7	20.5	72.1	6.6
2000	41.1	21.1	74.6	6.5
2450	52.4	24.0	104.2	7.7
3000	63.8	25.7	140.2	9.5

Target and measurement SAR after Normalized

Measurement Date	Frequency (MHz)	Phantom	Target SAR 1g (W/Kg)	Measured SAR 1g (W/Kg)	Deviation (%)
April, 22, 2019	2450	Body	5.24	4.92	-6.11

Copyright © 2019, LTA Co., Ltd.

Liquid Validation

The dielectric parameters were checked prior to assessment using the HP85070C dielectric probe kit. The dielectric parameters measured are reported in each correspondent section.

IEEE SCC-34/SC-2 P1528 recommended Tissue Dielectric Parameters

The head tissue dielectric parameters recommended by the IEEE SCC-34/SC-2 in P1528 have been incorporated in the following table. These head parameters are derived from planar layer models simulating the highest expected SAR for the dielectric properties and tissue thickness variations in a human head. Other head and body tissue parameters that have not been specified in P1528 are derived from the tissue dielectric parameters computed from the 4-Cole-Cole equations and extrapolated according to the head parameters specified in P1528

Target Frequency	Head		Body	
MHz	εr	σ (S/m)	εr	σ (S/m)
150	52.3	0.76	61.9	0.80
300	45.3	0.87	58.2	0.92
450	43.5	0.87	56.7	0.94
835	41.5	0.90	55.2	0.97
900	41.5	0.97	55.0	1.05
915	41.5	0.98	55.0	1.06
1450	40.5	1.20	54.0	1.30
1610	40.3	1.29	53.8	1.40
1800 ~ 2000	40.0	1.40	53.3	1.52
2450	39.2	1.80	52.7	1.95
3000	38.5	2.40	52.0	2.73
5800	35.3	5.27	48.2	6.00

Note:ε r = relative permittivity,σ = conductivity andρ = 1000 kg/m3

Liquid Confirmation Result :

2450 MHz		Target	Measured	Deviation (%)	Limit (%)
Body	Permitivity	52.7	52.700	0.000	±5
	Conductivity	1.95	1.950	0.000	±5

Copyright © 2019, LTA Co., Ltd.

System Validation Plots

Test Mode : 2450 MHz
Product Description : Validation Body
Probe serial number : SN 08/16 EPGO294
Convert factor of the probe : 2.0
Model : N/A
Test date : 2019-04-22

Frequency (MHz)	2450.000
Relative Permittivity (real part)	52.700
Relative Permittivity (imaginary part)	14.330
Conductivity (S/m)	1.950
Variation	-0.420
SAR 1g (W/Kg)	4.922
SAR 10g (W/Kg)	2.270

SURFACE SAR

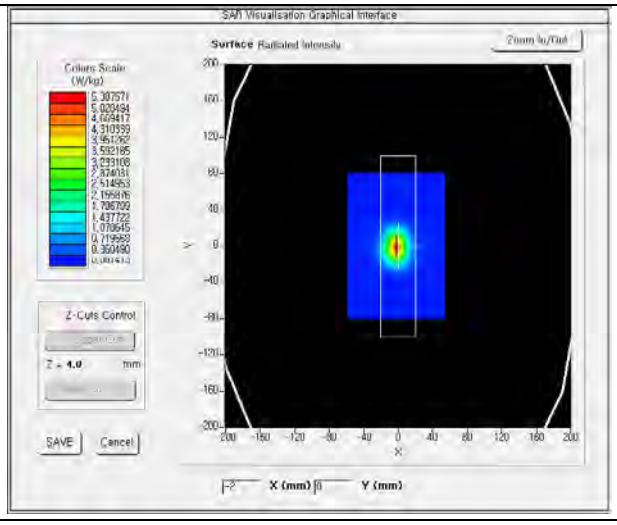

VOLUME SAR

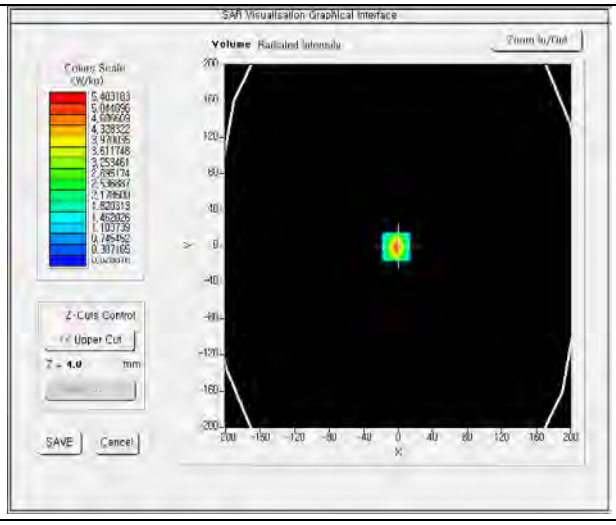

Z Axis Scan (X=0, Y=0)

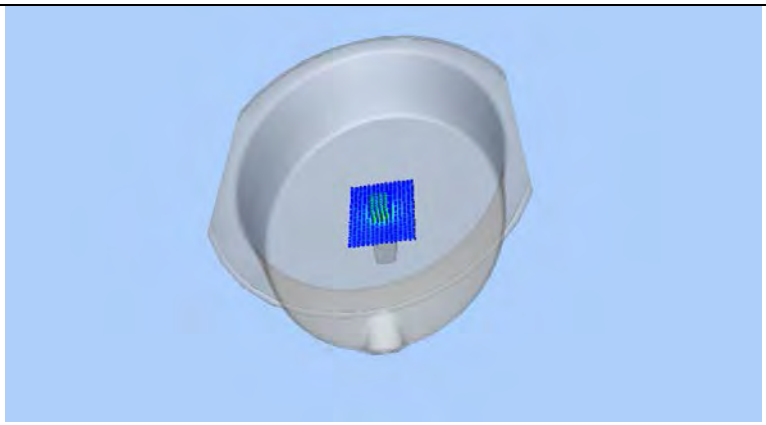

6. TYPE A MEASUREMENT UNCERTAINTY

The component of uncertainly may generally be categorized according to the methods used to evaluate them. The evaluation of uncertainly by the statistical analysis of a series of observations is termed a Type An evaluation of uncertainty. The evaluation of uncertainty by means other than the statistical analysis of a series of observation is termed a Type B evaluation of uncertainty. Each component of uncertainty, however evaluated, is represented by an estimated standard deviation, termed standard uncertainty, which is determined by the positive square root of the estimated variance.

A Type A evaluation of standard uncertainty may be based on any valid statistical method for treating data. This includes calculating the standard deviation of the mean of a series of independent observations; using the method of least squares to fit a curve to the data in order to estimate the parameter of the curve and their standard deviations; or carrying out an analysis of variance in order to identify and quantify random effects in certain kinds of measurement.

A type B evaluation of standard uncertainty is typically based on scientific judgment using all of the relevant information available. These may include previous measurement data, experience and specification, data provided in calibration reports and uncertainties assigned to reference data taken from handbooks. Broadly speaking, the uncertainty is either obtained from an outdoor source or obtained from an assumed distribution, such as the normal distribution, rectangular or triangular distributions indicated in Table .

below :

Uncertainty Distribution	Normal	Rectangle	Triangluar	U shape
Multi-plying Factor(a)	1/K(b)	1/√3	1/√6	1/√2

(a) standard uncertainty is determined as the product of the multiplying factor and the estimated range of variations in the measured
quantity
(b) κ is the coverage factor

Standard Uncertainty for Assumed Distribution

The combined standard uncertainty of the measurement result represents the estimated standard deviation of the result. It is obtained by combining the individual standard uncertainties of both Type A and Type -sum- by taking the positive square root of the estimated variances.

Expanded uncertainty is a measure of uncertainty that defines an interval about the measurement result within which the measured value is confidently believed to lie. It is obtained by multiplying the combined standard uncertainty by a coverage factor. Typically, the coverage factor ranges from 2 to 3. Using a coverage factor allows the true value of a measured quantity to be specified with a defined probability within the specified uncertainty range. For purpose of this document, a coverage factor two is used, which corresponds to confidence interval of about 95 %.

The COMOSAR Uncertainty Budget is show in below table :

Copyright © 2019, LTA Co., Ltd.

Uncertainty Budget of COMOSAR for frequency range 300 MHz to 6 GHz

Uncertainty Component	Tolerances %	Probability Distribution	Divisor	Ci (1g)	Ci (10g)	Uncertainty 1g(%)	Uncertainty (10g(%)
Measurement System Related							
Probe Calibration	6	N	1	1	1	6	6
Axial Isotropy	3	R	√3	√ (1-Cp)	√ (1-Cp)	1.22474	1.22474
Hemispherical Isotropy	4	R	√3	√ Cp	√ Cp	1.63299	1.63299
Boundary Effect	1	R	√3	1	1	0.57735	0.57735
Linearity	5	R	√3	1	1	2.88675	2.88675
System Detection Limits	1	R	√3	1	1	0.57735	0.57735
Readout Electronics	0.5	N	1	1	1	0.5	0.5
Response Time	0.2	R	√3	1	1	0.11547	0.11547
Integration Time	2	R	√3	1	1	1.1547	1.1547
RF Ambient Conditions	3	R	√3	1	1	1.73205	1.73205
Probe Positioner Mechanical Tolerances	2	R	√3	1	1	1.1547	1.1547
Probe Positioning with respect to Phantom Shell	1	R	√3	1	1	0.57735	0.57735
Extrapolation, Interpolation and integration Algorithms for Max. SAR Evaluation	1.5	R	√3	1	1	0.86603	0.86603
Test Sample Related							
Test Sample Positioning	1.5	N	1	1	1	1.5	1.5
Device Holder Uncertainty	5	N	1	1	1	5	5
Output Power Variation – SAR Drift measurement	3	R	√3	1	1	1.73205	1.73205
Phantom and Tissue Parameters Related							
Phantom Uncertainty (Shape and thickness Tolerances)	4	R	√3	1	1	2.3094	2.394
Liquid Conductivity – deviation from target value	5	R	√3	0.64	0.43	1.84752	1.2413
Liquid Conductivity – Measurement Uncertainty	2.5	N	1	0.64	0.43	1.6	1.075
Liquid Permittivity – deviation from target value	3	R	√3	0.6	0.49	1.03923	0.8487
Liquid Permittivity – Measurement Uncertainty	2.5	N	1	0.6	0.49	1.5	1.225
					Combined Standard Uncertainty	9.66051%	9.52428%
					Expanded Standard Uncertainty (K=2 , confidence 95%)	**18.9346%**	**18.6676%**

Copyright © 2019, LTA Co., Ltd.

7. OUTPUT POWER VERIFICATION

Band	Freq.	Ch.	Conducted Power (dBm)						
			Data Rate (Mbps)						
			1	2	5.5	11			
802.11b	2412	1	19.24	21.45	21.53	21.67			
	2437	6	18.33	21.66	21.87	22.08			
	2462	11	20.15	22.04	22.10	22.23			
Band	Freq.	Ch.	Conducted Power (dBm)						
			Data Rate (Mbps)						
			6	9	12	24	36	48	54
802.11g	2412	1	21.57	21.55	21.53	21.48	21.44	21.38	21.20
	2437	6	21.17	21.10	21.10	21.15	21.04	20.94	20.80
	2462	11	21.39	21.31	21.13	20.99	20.94	20.87	20.33
Band	Freq.	Ch.	Conducted Power (dBm)						
			Data Rate (Mbps)						
			MCS0	MCS1	MCS2	MCS4	MCS5	MCS6	MCS7
802.11n	2412	1	21.68	21.66	21.67	21.53	21.57	21.43	21.30
(HT-20)	2437	6	21.89	21.80	21.73	21.62	21.55	21.47	21.28
	2462	11	22.04	21.77	21.78	21.65	21.43	20.99	20.97

Copyright © 2019, LTA Co., Ltd.

8. SAR TEST RESULTS

Mode	Channel	Temp (℃)	Drift (%)	1g SAR (W/Kg)	10g SAR (W/Kg)	Test distances
802.11 b	1	20.7	4.38	0.074	0.023	Right [0.0 cm]
	6		-3.18	0.322	0.059	Right [0.0 cm]
	11		-3.41	0.214	0.121	Right [0.0 cm]
	6		4.78	0.013	0.008	Front1 [0.0 cm]
	6		2.88	0.003	0.002	Front2 [0.0 cm]
	6		-4.56	0.093	0.032	Rear1 [0.0 cm]
	6		4.84	0.007	0.006	Rear2 [0.0 cm]
	6		3.17	0.010	0.003	Left [0.0 cm]
	6		4.29	0.020	0.003	Top [0.0 cm]
	6		3.66	0.111	0.039	Bottom [0.0 cm]
802.11 g	6	20.7	4.29	0.064	0.046	Right [0.0 cm]
802.11 n20	6	20.7	0.58	0.027	0.006	Right [0.0 cm]
Limit : 1.6 W/kg				Max report SAR : 0.322 W/kg		

Copyright © 2019, LTA Co., Ltd.

SAR Measurement Plots

Test Mode	: 2412 MHz // Right of Device 0 mm // ch 1
Probe serial number	: SN 08/16 EPGO294
Convert factor of the probe	: 2.0
Product Description	: 802.11 b
Model	: HNJ-350E
Test date	: 2019-04-22

Frequency (MHz)	2412.000
Relative Permittivity (real part)	52.750
Relative Permittivity (imaginary part)	14.275
Conductivity (S/m)	1.912
Variation	4.380
SAR 1g (W/Kg)	0.074
SAR 10g (W/Kg)	0.023

SURFACE SAR	VOLUME SAR
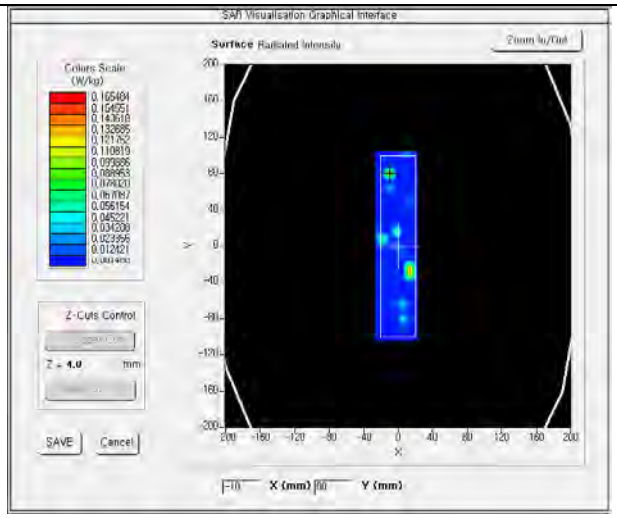	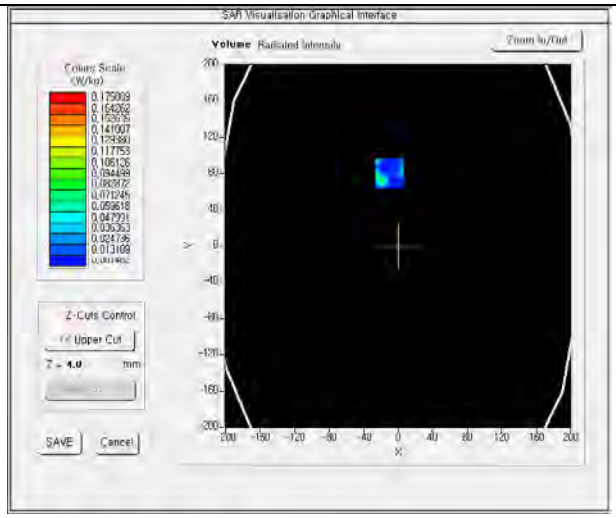

Z Axis Scan (X=0, Y=0)

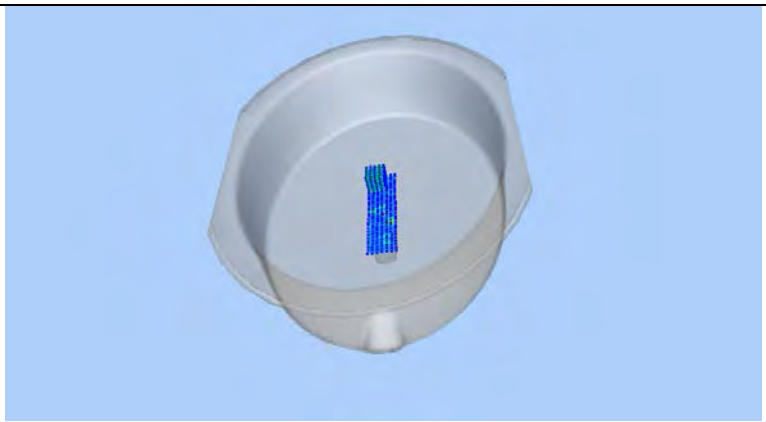

Test Mode : 2437 MHz // Right of Device 0 mm // ch 6
Probe serial number : SN 08/16 EPGO294
Convert factor of the probe : 2.0
Product Description : 802.11 b
Model : HNJ-350E
Test date : 2019-04-22

Frequency (MHz)	2437.000
Relative Permittivity (real part)	52.717
Relative Permittivity (imaginary part)	14.311
Conductivity (S/m)	1.937
Variation	-3.180
SAR 1g (W/Kg)	0.322
SAR 10g (W/Kg)	0.059

SURFACE SAR	VOLUME SAR
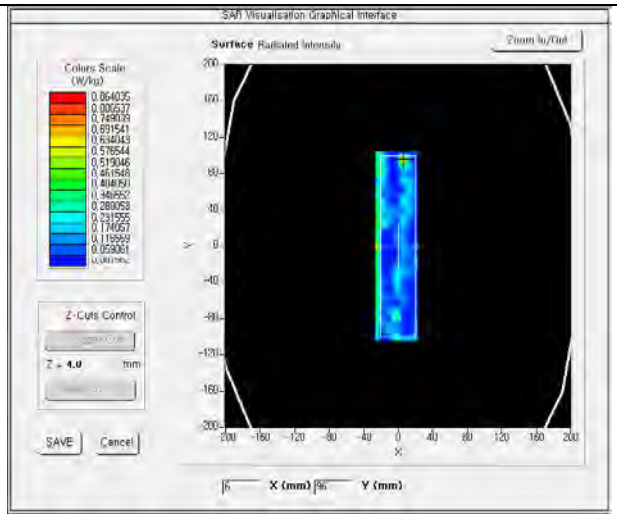	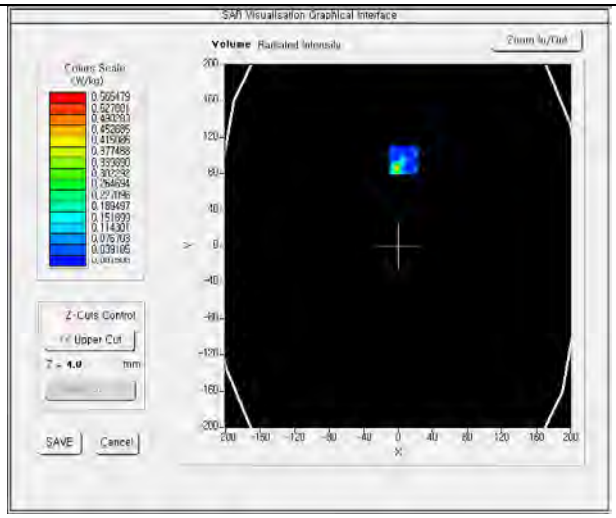

Z Axis Scan (X=0, Y=0)

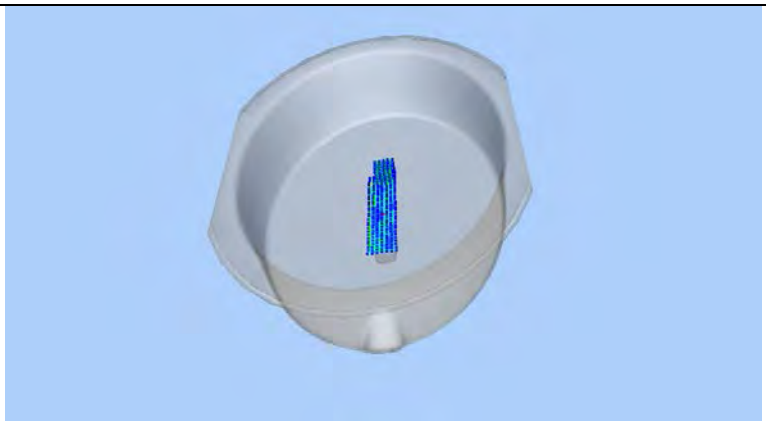

Test Mode : 2462 MHz // Right of Device 0 mm // ch 11
Probe serial number : SN 08/16 EPGO294
Convert factor of the probe : 2.0
Product Description : 802.11 b
Model : HNJ-350E
Test date : 2019-04-22

Frequency (MHz)	2462.000
Relative Permittivity (real part)	52.684
Relative Permittivity (imaginary part)	14.374
Conductivity (S/m)	1.966
Variation	-3.410
SAR 1g (W/Kg)	0.214
SAR 10g (W/Kg)	0.121

SURFACE SAR	VOLUME SAR
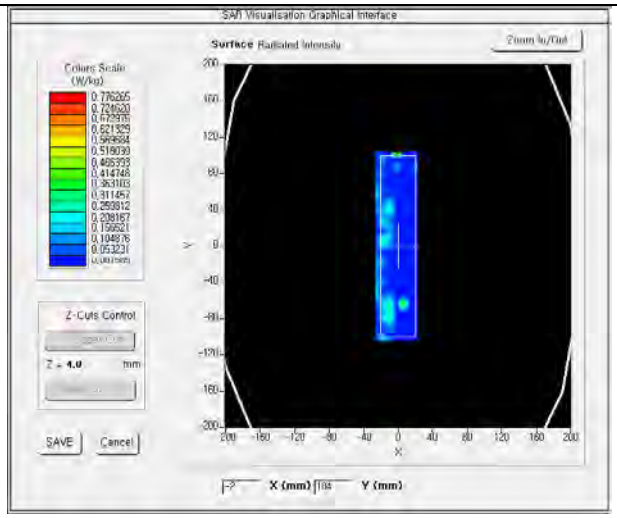	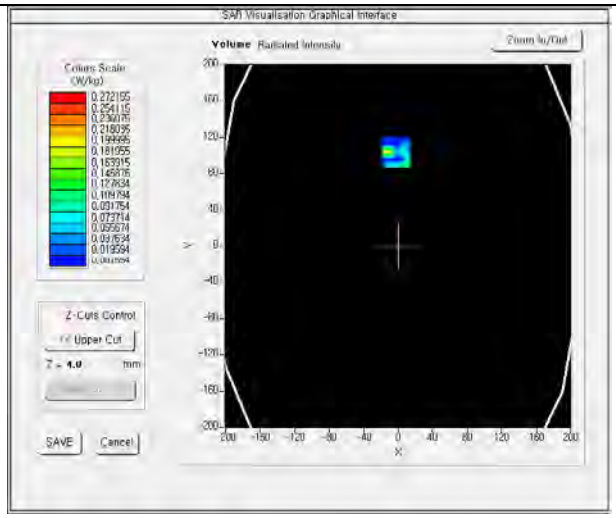

Z Axis Scan (X=0, Y=0)

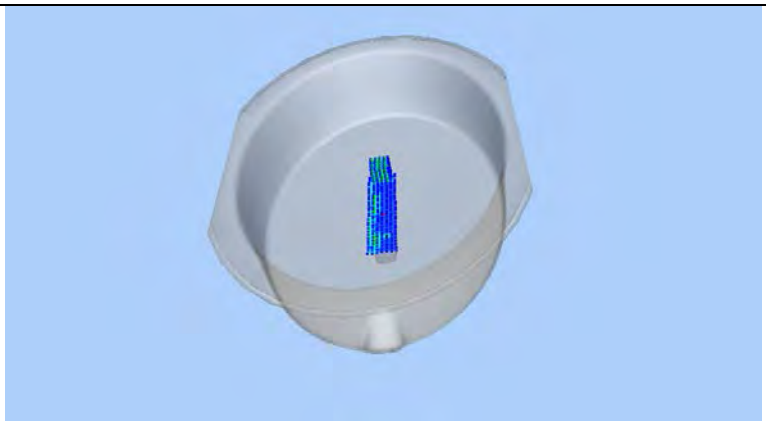

Test Mode : 2437 MHz // Front_1 of Device 0 mm // ch 6
Probe serial number : SN 08/16 EPGO294
Convert factor of the probe : 2.0
Product Description : 802.11 b
Model : HNJ-350E
Test date : 2019-04-22

Frequency (MHz)	2437.000
Relative Permittivity (real part)	52.717
Relative Permittivity (imaginary part)	14.311
Conductivity (S/m)	1.937
Variation	4.780
SAR 1g (W/Kg)	0.013
SAR 10g (W/Kg)	0.008

SURFACE SAR	VOLUME SAR
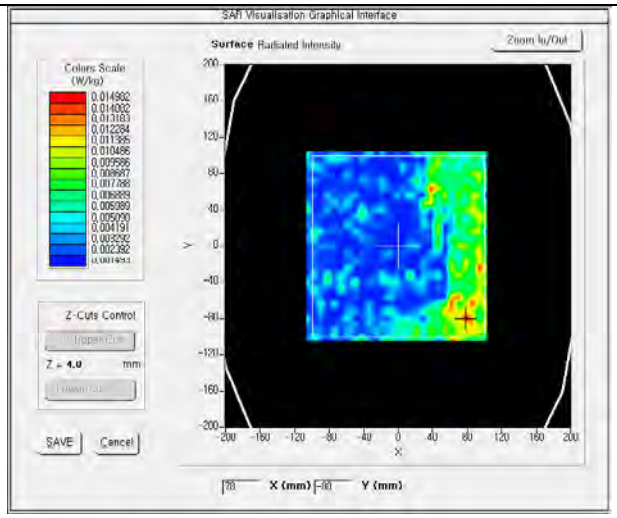	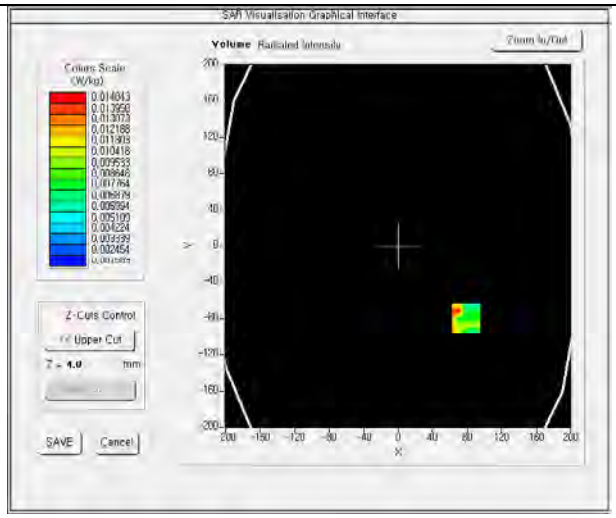

Z Axis Scan (X=0, Y=0)

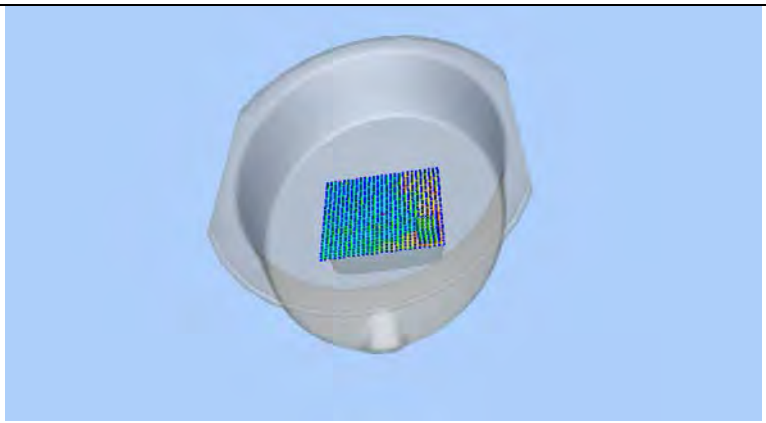

Test Mode : 2437 MHz // Front_2 of Device 0 mm // ch 6
Probe serial number : SN 08/16 EPGO294
Convert factor of the probe : 2.0
Product Description : 802.11 b
Model : HNJ-350E
Test date : 2019-04-22

Frequency (MHz)	2437.000
Relative Permittivity (real part)	52.717
Relative Permittivity (imaginary part)	14.311
Conductivity (S/m)	1.937
Variation	2.880
SAR 1g (W/Kg)	0.003
SAR 10g (W/Kg)	0.002

SURFACE SAR	VOLUME SAR
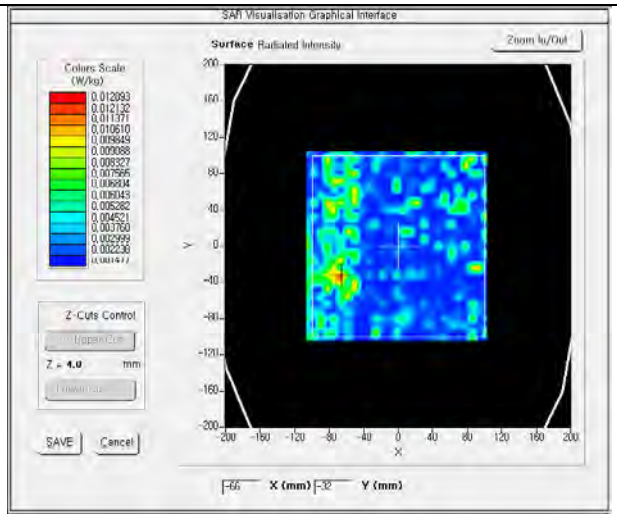	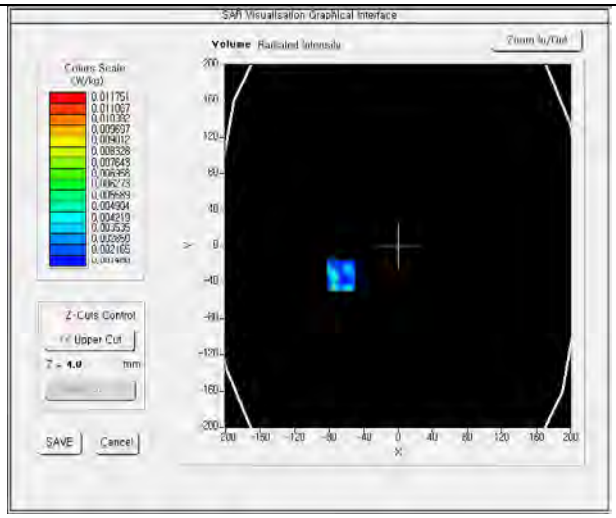

Z Axis Scan (X=0, Y=0)

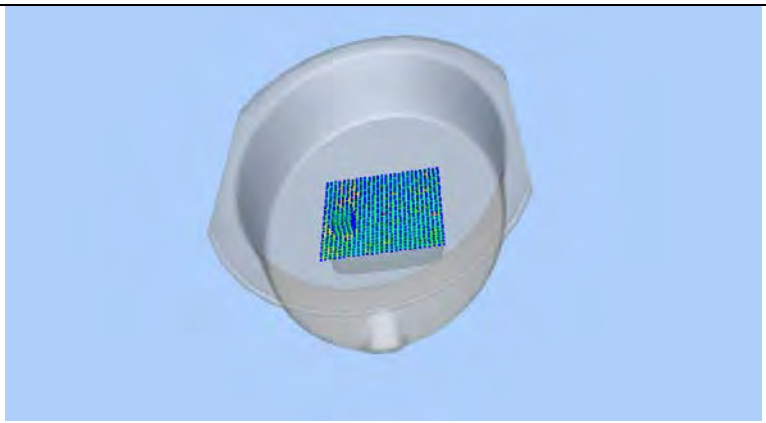

Test Mode : 2437 MHz // Bottom_1 of Device 0 mm // ch 6
Probe serial number : SN 08/16 EPGO294
Convert factor of the probe : 2.0
Product Description : 802.11 b
Model : HNJ-350E
Test date : 2019-04-22

Frequency (MHz)	2437.000
Relative Permittivity (real part)	52.717
Relative Permittivity (imaginary part)	14.311
Conductivity (S/m)	1.937
Variation	3.660
SAR 1g (W/Kg)	0.111
SAR 10g (W/Kg)	0.039

SURFACE SAR	VOLUME SAR
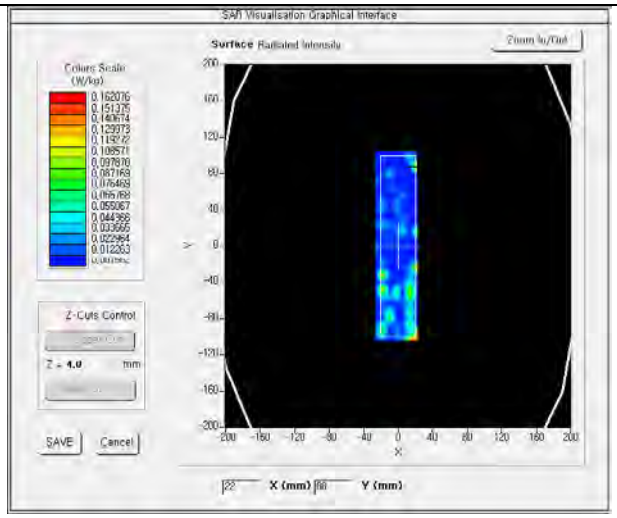	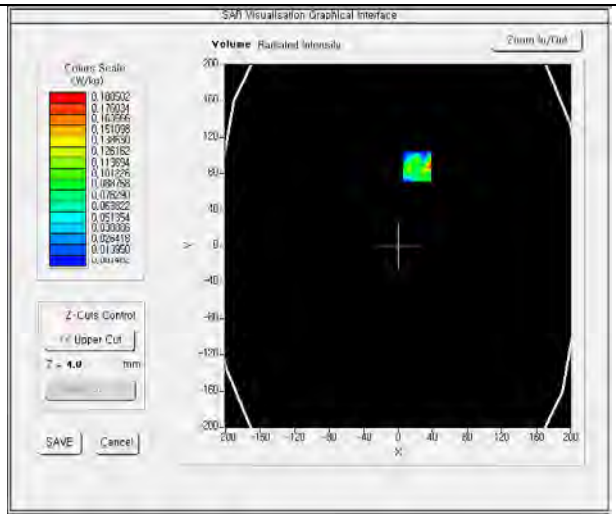

Z Axis Scan (X=0, Y=0)

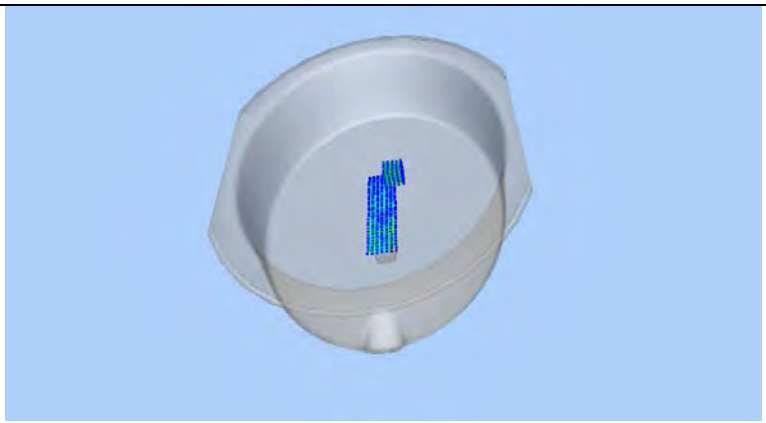

Test Mode : 2437 MHz // Bottom_2 of Device 0 mm // ch 6
Probe serial number : SN 08/16 EPGO294
Convert factor of the probe : 2.0
Product Description : 802.11 b
Model : HNJ-350E
Test date : 2019-04-22

Frequency (MHz)	2437.000
Relative Permittivity (real part)	52.717
Relative Permittivity (imaginary part)	14.311
Conductivity (S/m)	1.937
Variation	-0.050
SAR 1g (W/Kg)	0.003
SAR 10g (W/Kg)	0.001

SURFACE SAR	VOLUME SAR
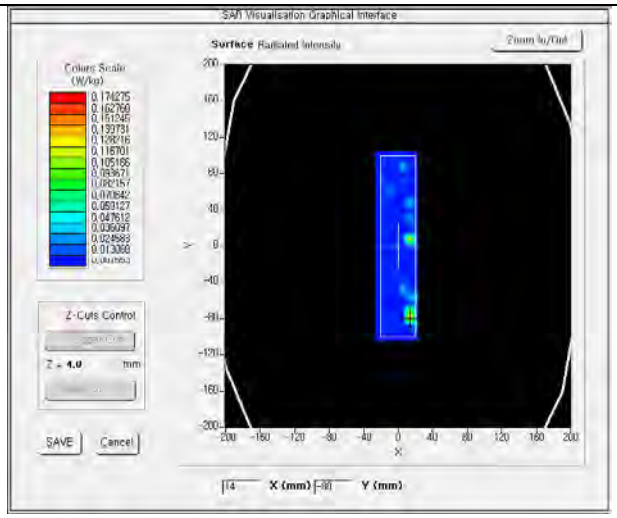	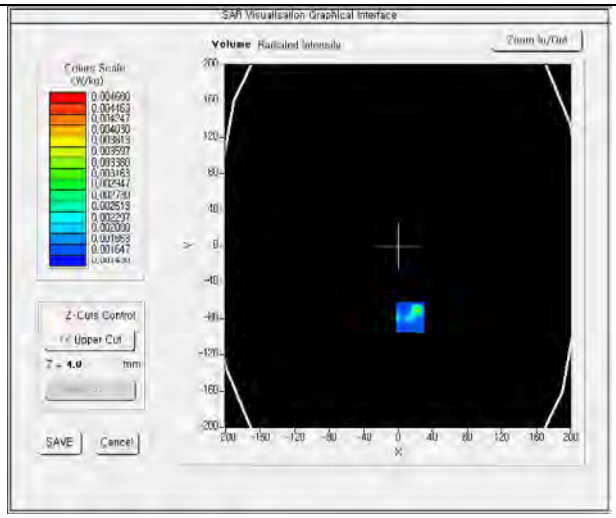

Z Axis Scan (X=0, Y=0)

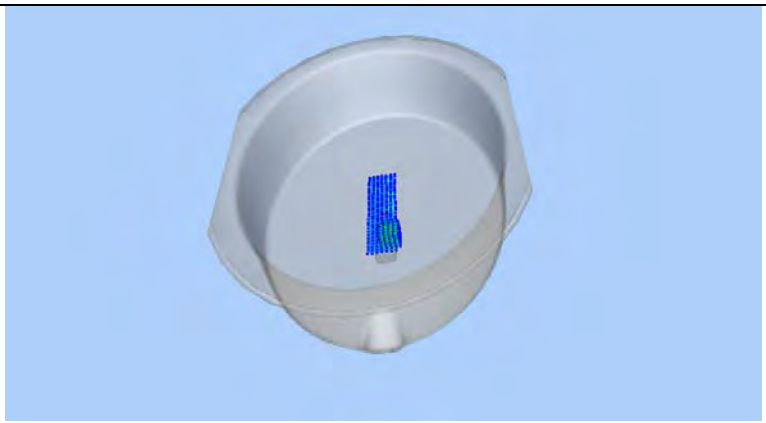

Test Mode : 2437 MHz //Left of Device 0 mm // ch 6
Product Description : 802.11 b
Probe serial number : SN 08/16 EPGO294
Convert factor of the probe : 2.0
Model : HNJ-350E
Test date : 2019-04-22

Frequency (MHz)	2437.000
Relative Permittivity (real part)	52.717
Relative Permittivity (imaginary part)	14.311
Conductivity (S/m)	1.937
Variation	3.170
SAR 1g (W/Kg)	0.010
SAR 10g (W/Kg)	0.003

SURFACE SAR	VOLUME SAR
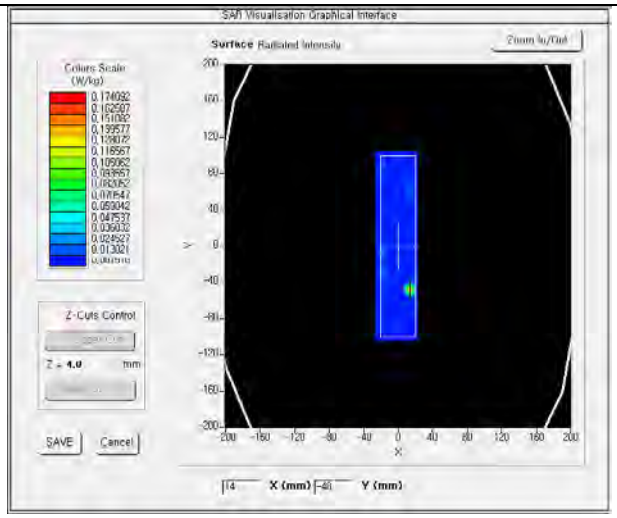	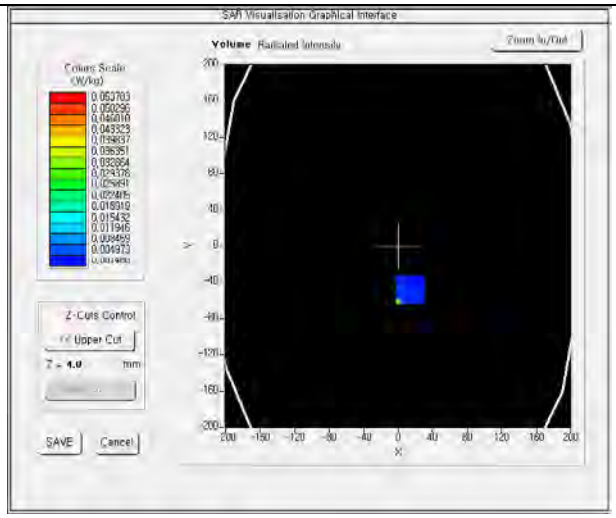

Z Axis Scan (X=0, Y=0)

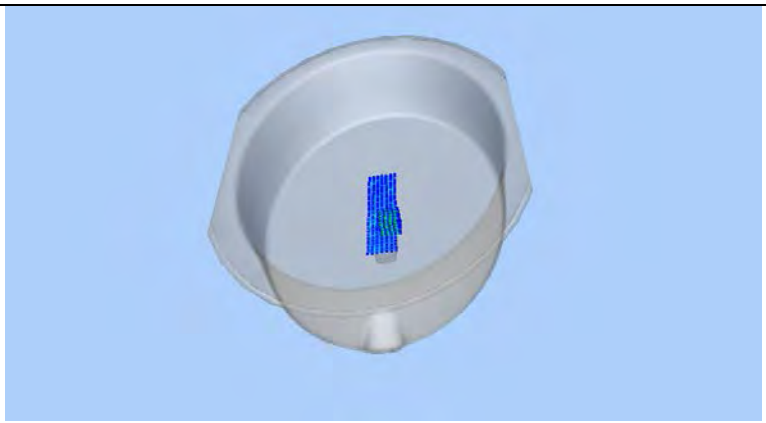

Test Mode : 2437 MHz //Top of Device 0 mm // ch 6
Probe serial number : SN 08/16 EPGO294
Convert factor of the probe : 2.0
Product Description : 802.11 b
Model : HNJ-350E
Test date : 2019-04-22

Frequency (MHz)	2437.000
Relative Permittivity (real part)	52.717
Relative Permittivity (imaginary part)	14.311
Conductivity (S/m)	1.937
Variation	4.290
SAR 1g (W/Kg)	0.020
SAR 10g (W/Kg)	0.003

SURFACE SAR	VOLUME SAR
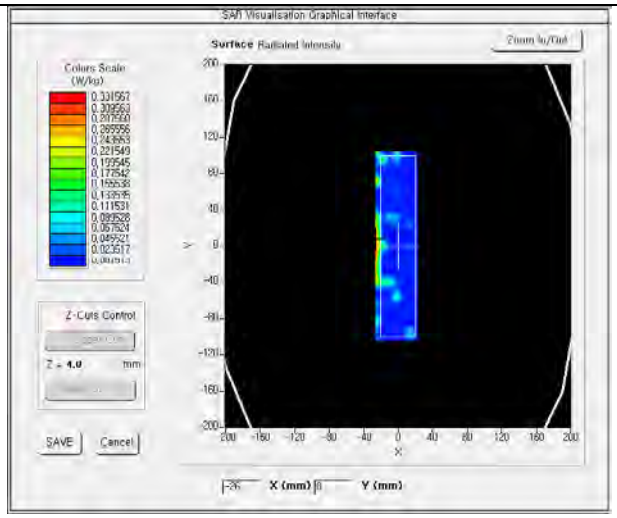	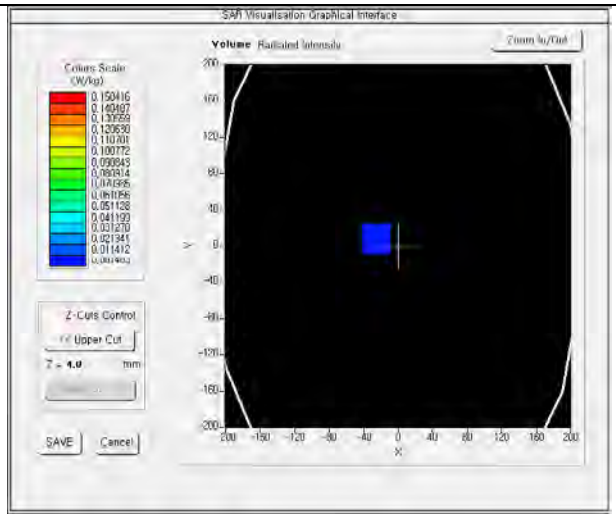

Z Axis Scan (X=0, Y=0)

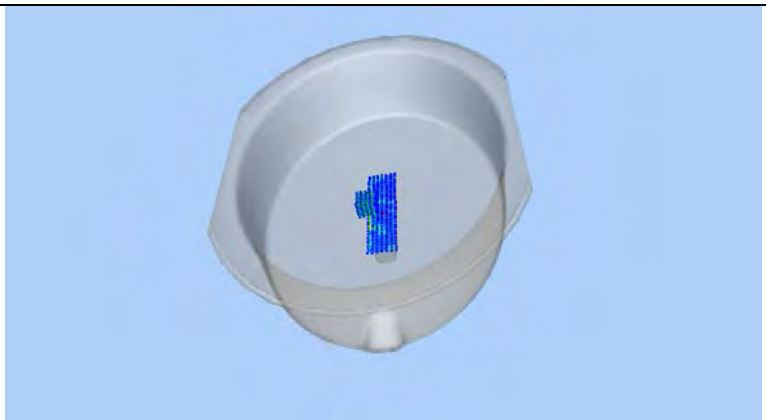

Test Mode : 2437 MHz //Rear_1 of Device 0 mm // ch 6
Probe serial number : SN 08/16 EPGO294
Convert factor of the probe : 2.0
Product Description : 802.11 b
Model : HNJ-350E
Test date : 2019-04-22

Frequency (MHz)	2437.000
Relative Permittivity (real part)	52.717
Relative Permittivity (imaginary part)	14.311
Conductivity (S/m)	1.937
Variation	-4.560
SAR 1g (W/Kg)	0.093
SAR 10g (W/Kg)	0.032

SURFACE SAR	VOLUME SAR
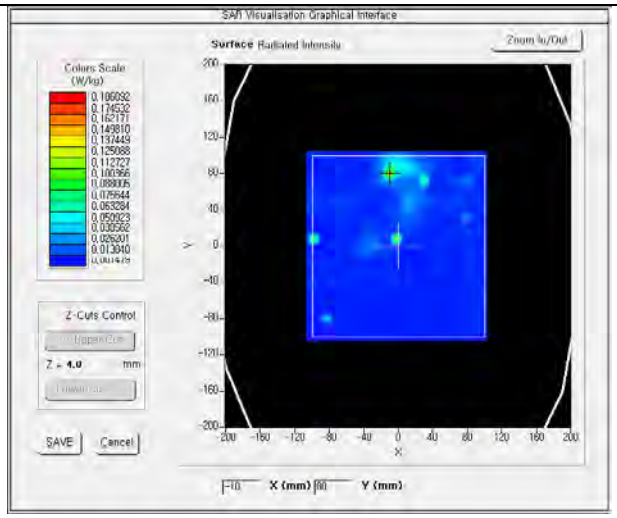	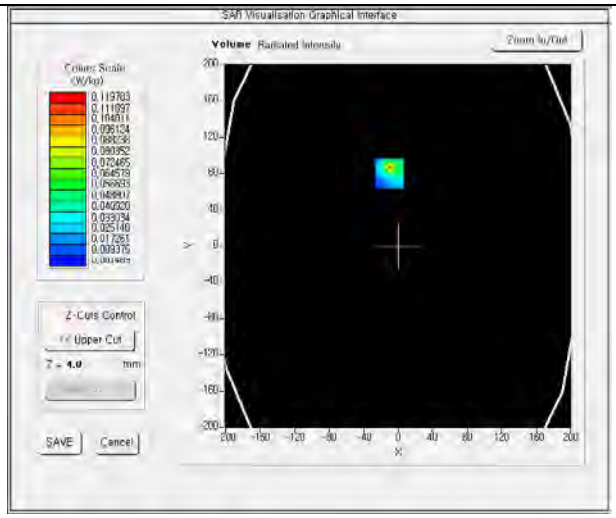

Z Axis Scan (X=0, Y=0)

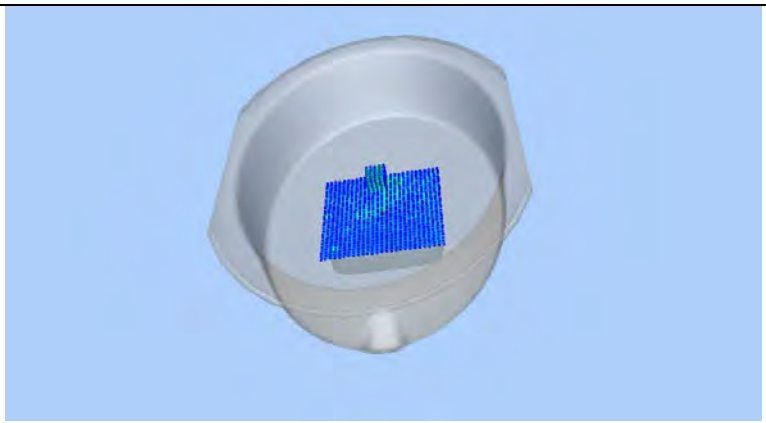

Test Mode : 2437 MHz //Rear_2 of Device 0 mm // ch 6
Probe serial number : SN 08/16 EPGO294
Convert factor of the probe : 2.0
Product Description : 802.11 b
Model : HNJ-350E
Test date : 2019-04-22

Frequency (MHz)	2437.000
Relative Permittivity (real part)	52.717
Relative Permittivity (imaginary part)	14.311
Conductivity (S/m)	1.937
Variation	4.840
SAR 1g (W/Kg)	0.007
SAR 10g (W/Kg)	0.006

SURFACE SAR	VOLUME SAR
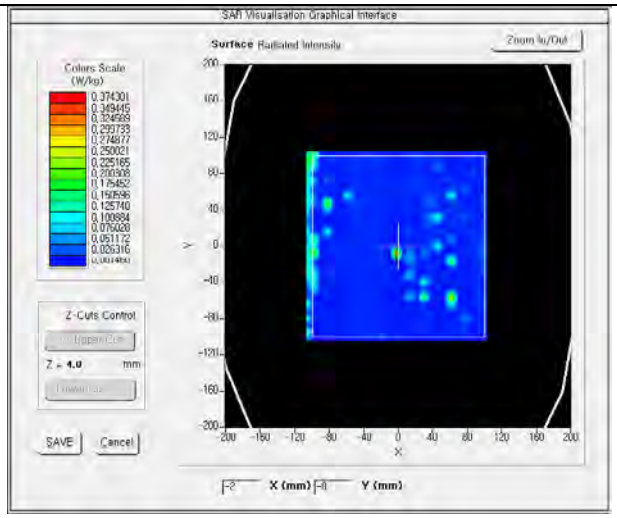	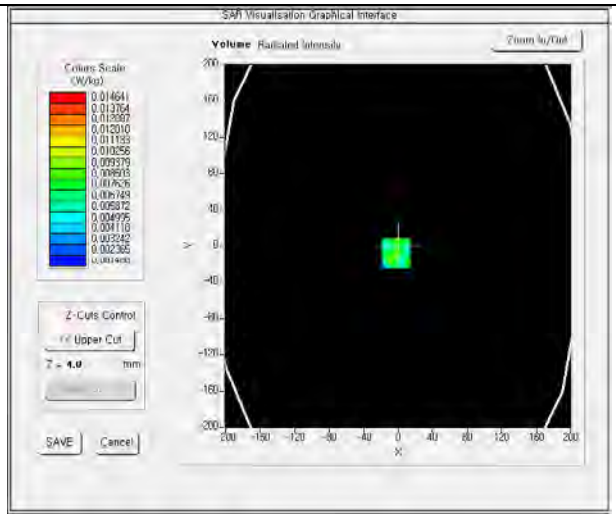

Z Axis Scan (X=0, Y=0)

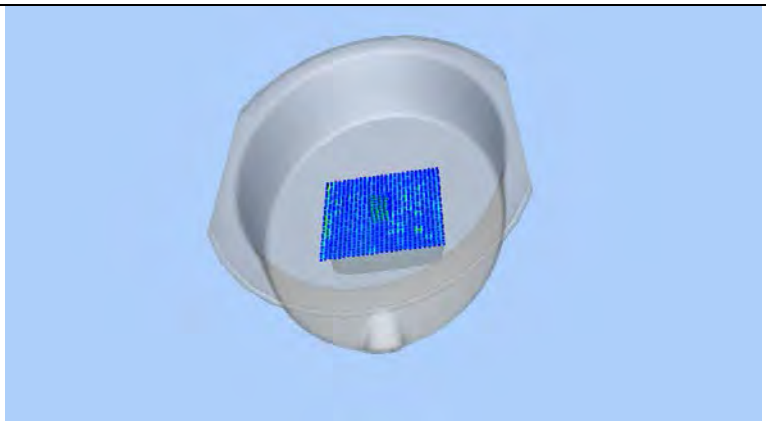

Test Mode : 2437 MHz //Right of Device 0 mm // ch 6
Probe serial number : SN 08/16 EPGO294
Convert factor of the probe : 2.0
Product Description : 802.11 g
Model : HNJ-350E
Test date : 2019-04-22

Frequency (MHz)	2437.000
Relative Permittivity (real part)	52.717
Relative Permittivity (imaginary part)	14.311
Conductivity (S/m)	1.937
Variation	4.290
SAR 1g (W/Kg)	0.064
SAR 10g (W/Kg)	0.046

SURFACE SAR	VOLUME SAR
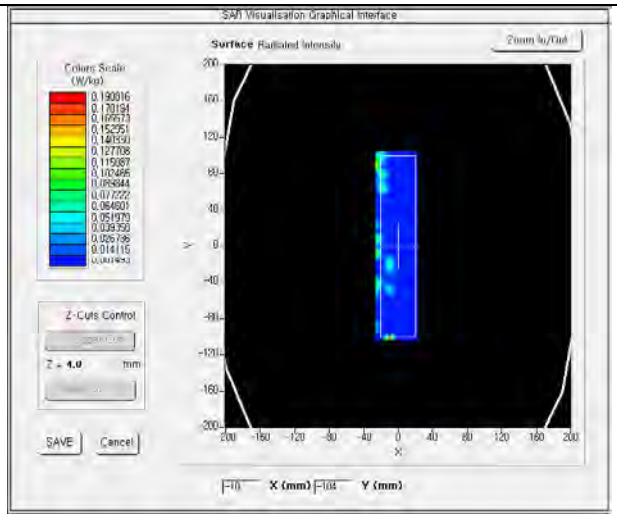	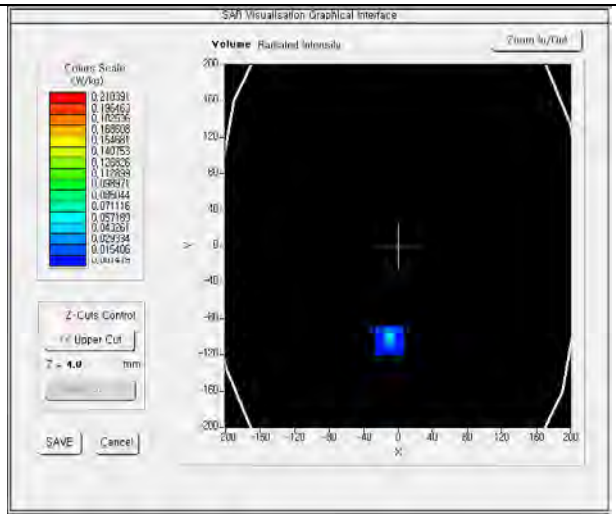

Z Axis Scan (X=0, Y=0)

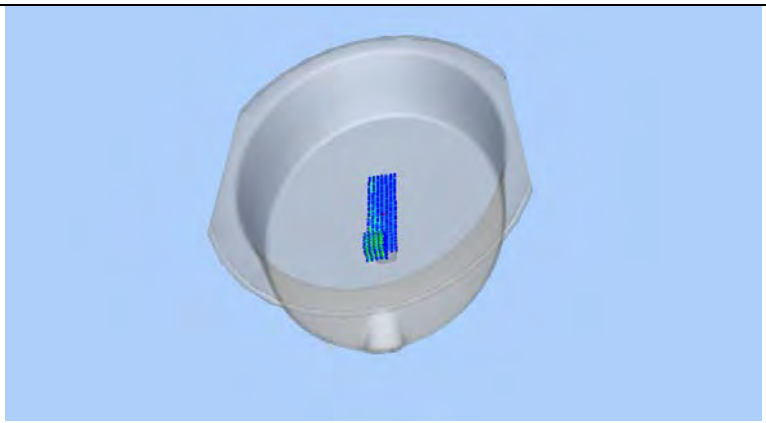

Test Mode : 2437 MHz //Right of Device 0 mm // ch 6
Probe serial number : SN 08/16 EPGO294
Convert factor of the probe : 2.0
Product Description : 802.11 n20
Model : HNJ-350E
Test date : 2019-04-22

Frequency (MHz)	2437.000
Relative Permittivity (real part)	52.717
Relative Permittivity (imaginary part)	14.311
Conductivity (S/m)	1.937
Variation	0.580
SAR 1g (W/Kg)	0.027
SAR 10g (W/Kg)	0.006

SURFACE SAR	VOLUME SAR
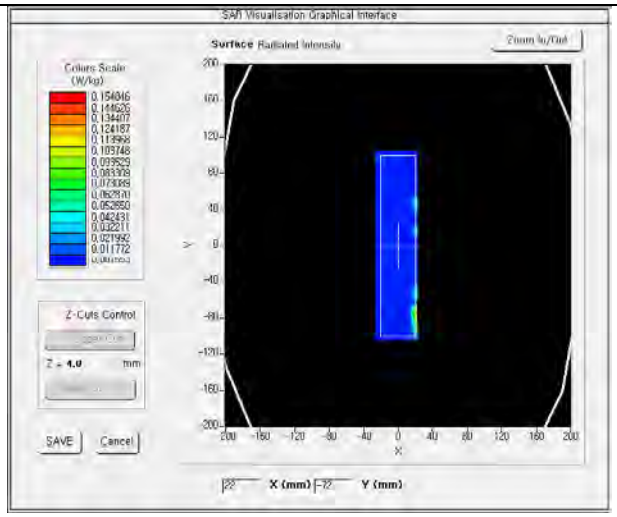	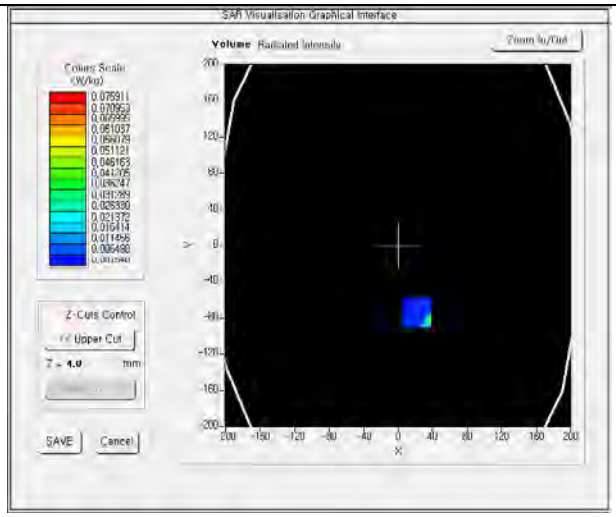

Z Axis Scan (X=0, Y=0)

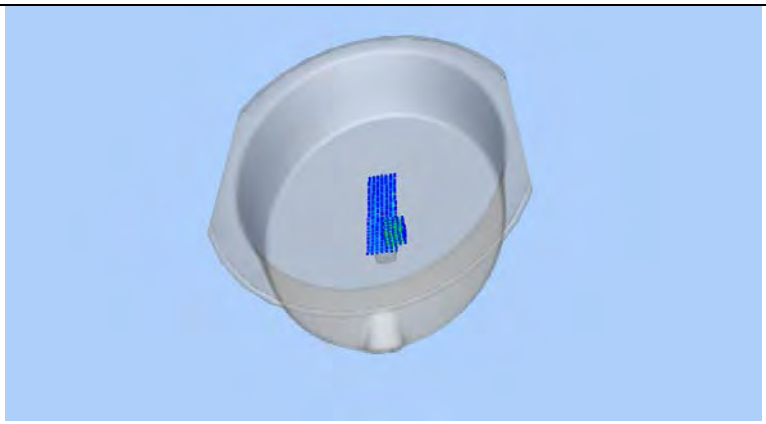

Annex A. Test Instrument

Name of Equipment	Manufacturer	Model	Last Cal. Date	Next Cal. Date	Serial Number
SHEILD ROOM	KTM	SHIELD ROOM	N/A	N/A	NONE
ROBOT KR6-R900 KUKA	KUKA	KR 6 R900 SIXX	N/A	N/A	500106
KUKA ROBOT CONTROLLER	KUKA	KCP	N/A	N/A	7611
KUKA ROBOT CONTROL BOX	KUKA	KRC4	N/A	N/A	212851
KUKA ROBOT VPS	KUKA	VPS	N/A	N/A	SN 12/13 VPS37
MULTIMETER	KEITHLEY	KEITHLEY 2000	2018-02-14	2020-02-14	4014116
COMOSAR IEEE SAM PHANTOM	SATIMO	SAM PHANTOM	N/A	N/A	SN 12/13 SAM98
COMOSAR ELLIPTIC PHANTOM	SATIMO	ELLIPTICAL PHANTOM	N/A	N/A	SN 12/13 ELLI25
MOBILE PHONE POSITIONING SYSTEM	SATIMO	HANDSET POSITIONING	N/A	N/A	SN 12/13 MSH81
LAPTOP POSITIONING SYSTEM	SATIMO	DEVICE POSITIONING	N/A	N/A	SN 25/12 LSH18
COMOSAR DOSIMETRIC E FIELD PROBE	SATIMO	SSE2	2019-04-08	2020-04-08	SN 08/16 EPGO294
LIMESAR DIELECTRIC PROBE	SATIMO	SCLMP	2018-03-13	2020-03-13	SN 12/13 OCPG52
COMOSAR 300 MHz REFERENCE DIPOLE	SATIMO	SID300	2018-03-13	2020-03-13	SN 12/13 DIP0G300-221
COMOSAR 450 MHz REFERENCE DIPOLE	SATIMO	SID450	2018-03-13	2020-03-13	SN 12/13 DIP0G450-222
COMOSAR 835 MHz REFERENCE DIPOLE	SATIMO	SID835	2018-03-13	2020-03-13	SN 12/13 DIP0G835-223
COMOSAR 1800 MHz REFERENCE DIPOLE	SATIMO	SID200800	2018-03-13	2020-03-13	SN 12/13 DIP1G800-225
COMOSAR 2000 MHz REFERENCE DIPOLE	SATIMO	SID2000	2018-03-13	2020-03-13	SN 12/13 DIP2G000-227
COMOSAR 2200 MHz REFERENCE DIPOLE	SATIMO	SID2450	2018-03-13	2020-03-13	SN 12/13 DIP2G450-228
COMMUNICATION ANTENNA	SATIMO	COMMUUNICATION ANTENNA	N/A	N/A	SN 26/12 ANTA41
ATTENUATOR (6 dB)	HP	8491A-6	2019-03-18	2020-03-18	34082
ATTENUATOR (10 dB)	HP	8491A-10	2019-03-18	2020-03-18	58121
ATTENUATOR (30 dB)	HP	8491B	2019-03-18	2020-03-18	MY39269906
DUAL DIRECTIONAL COUPLER	HP	772D	2019-03-18	2020-03-18	2839A01038
DUAL DIRECTIONAL COUPLER	HP	778D	2019-03-18	2020-03-18	13020
DIRECTIONAL COUPLER	HP	779D	2019-03-18	2020-03-18	13021

Copyright © 2019, LTA Co., Ltd.

Annex B. EUT and Test Setup Photographs

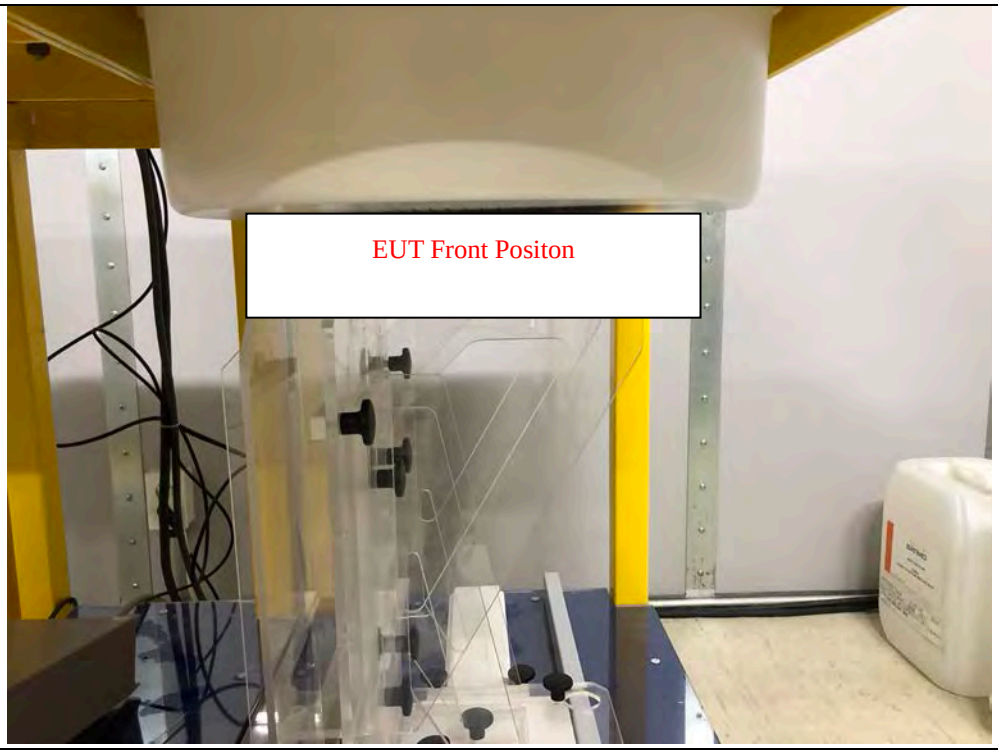

Front of Device 0 mm from Phantom Top view

Front of Device 0 mm from Phantom Side view

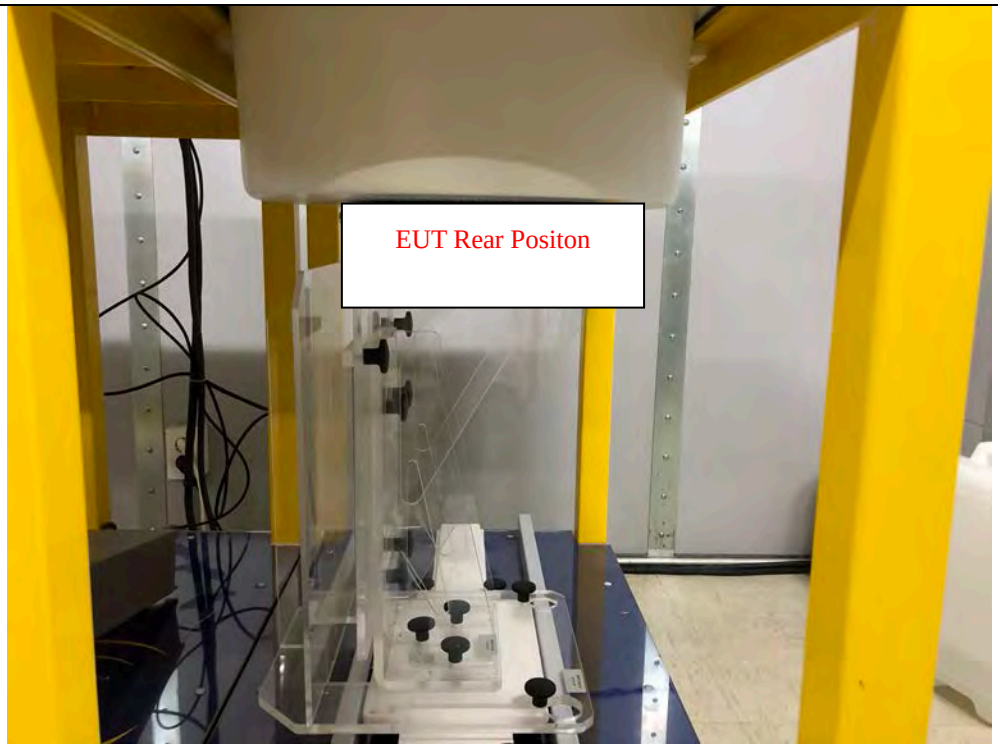

Rear of Device 0 mm from Phantom Top view

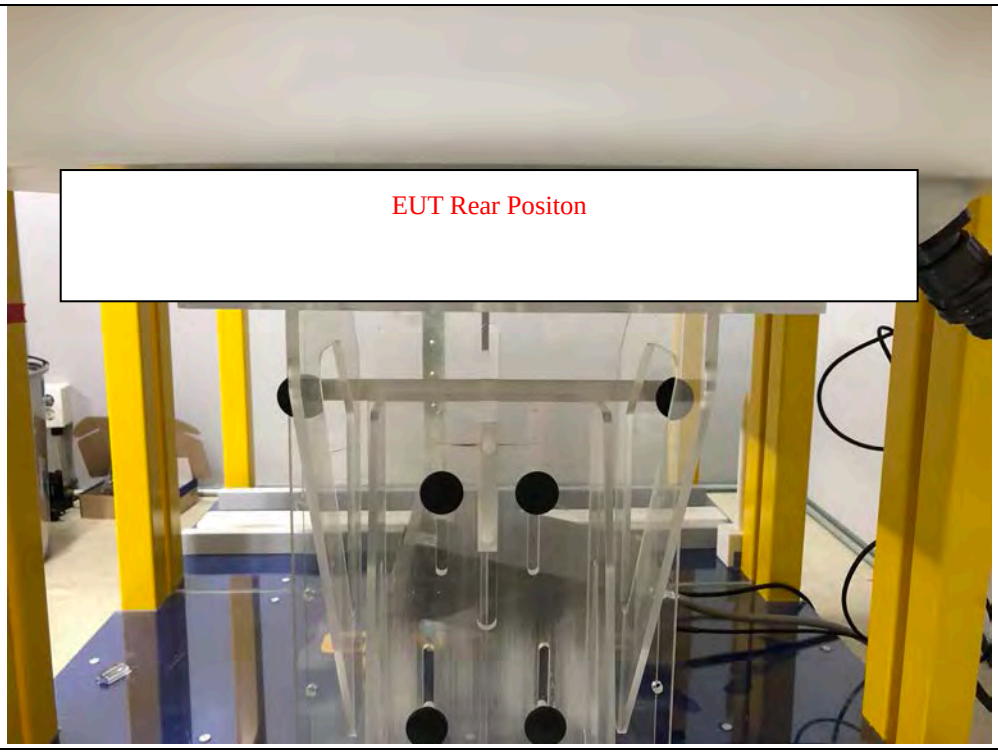

Rear of Device 0 mm from Phantom Side view

Copyright © 2019, LTA Co., Ltd.

Top of Device 0 mm from Phantom Top view

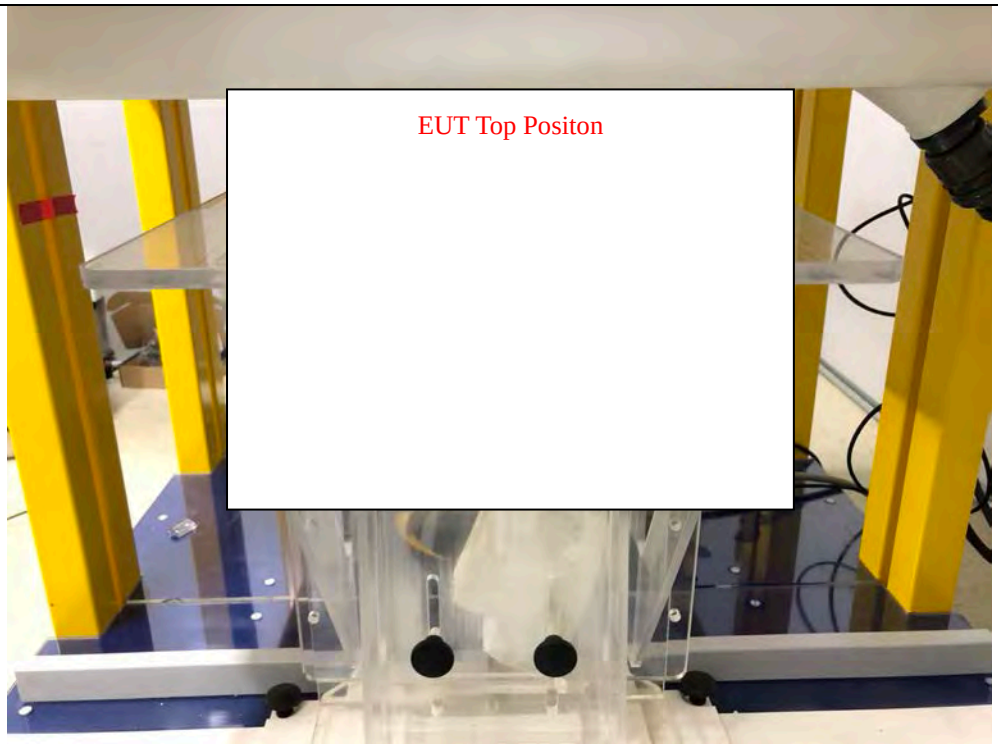

Top of Device 0 mm from Phantom Side view

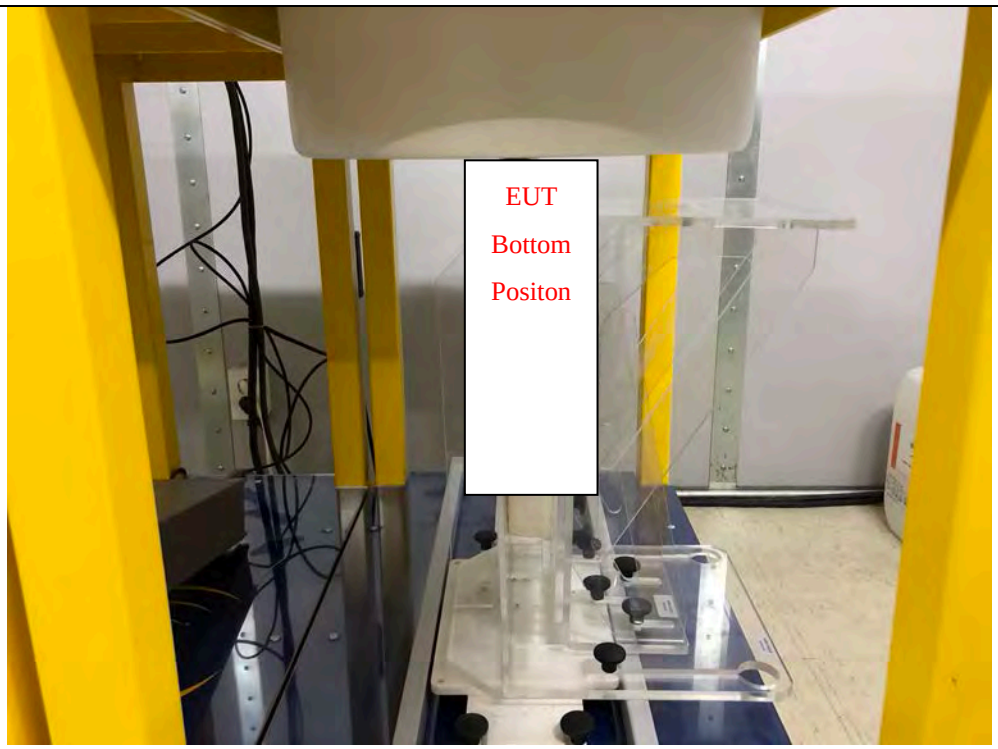

Bottom of Device 0 mm from Phantom Top view

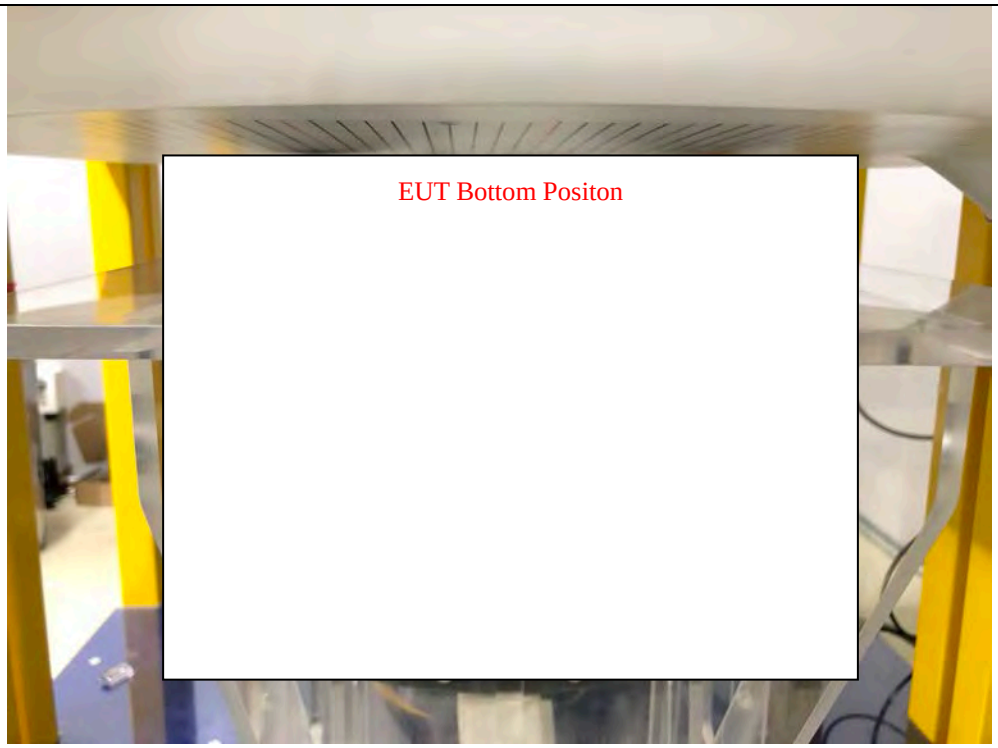

Bottom of Device 0 mm from Phantom Side view

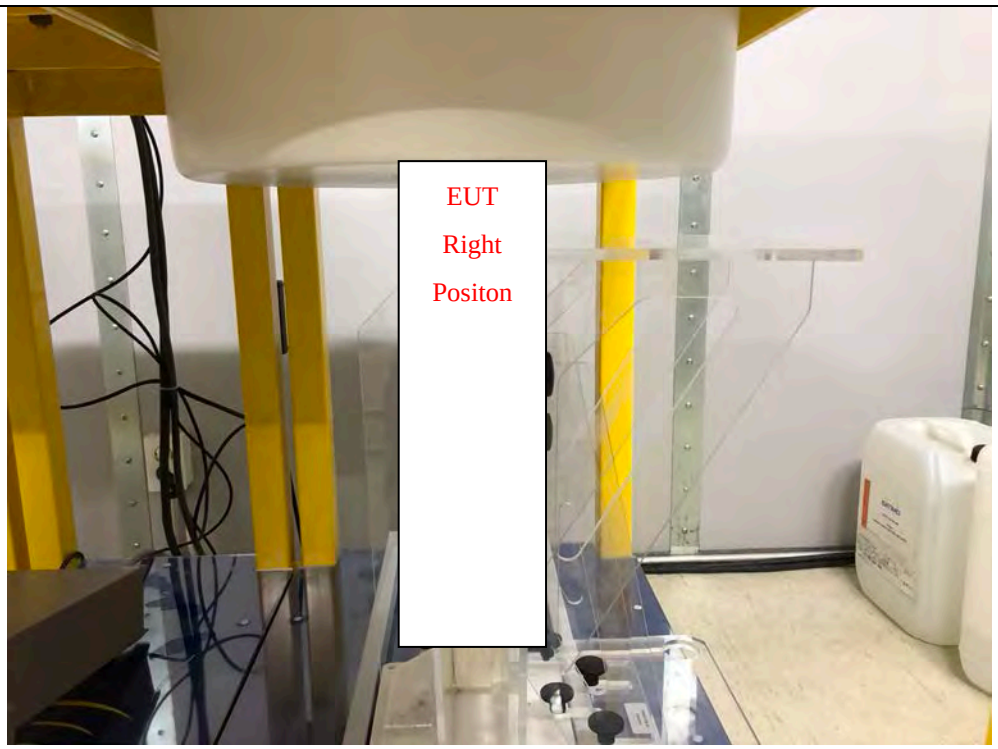

Right of Device 0 mm from Phantom Top view

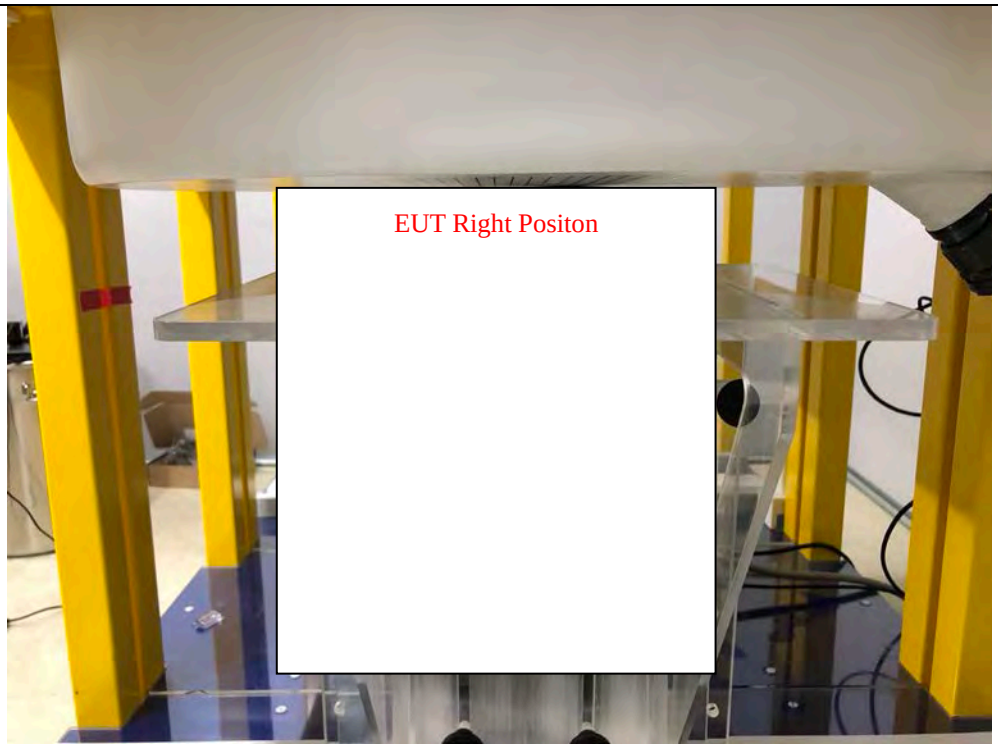

Right of Device 0 mm from Phantom Side view

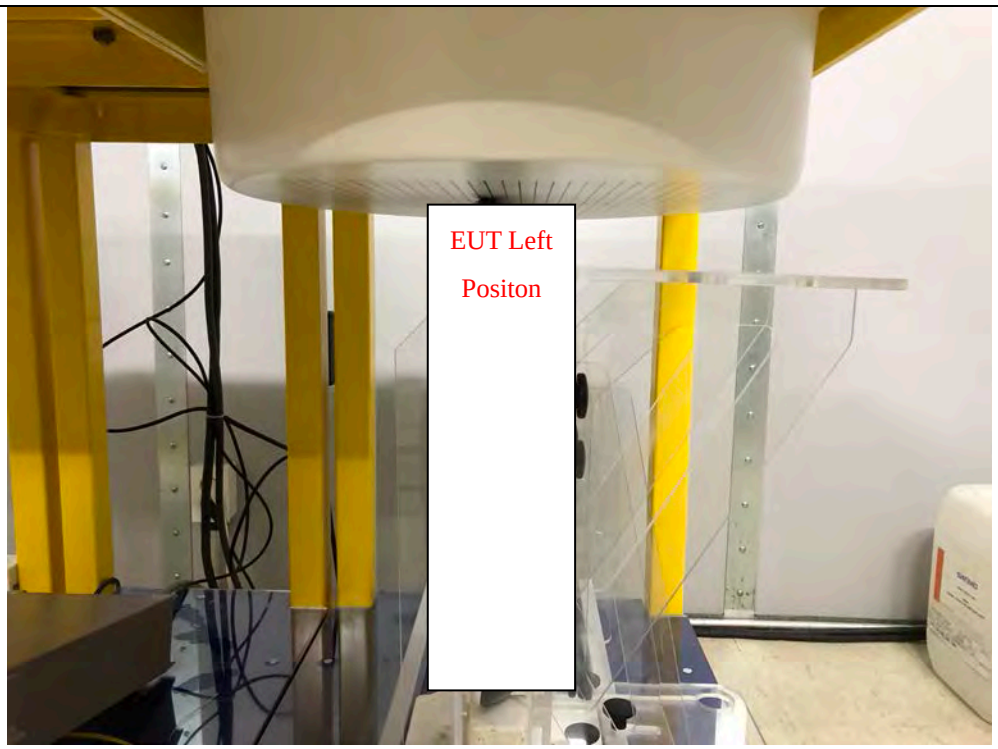

Left of Device 0 mm from Phantom Top view

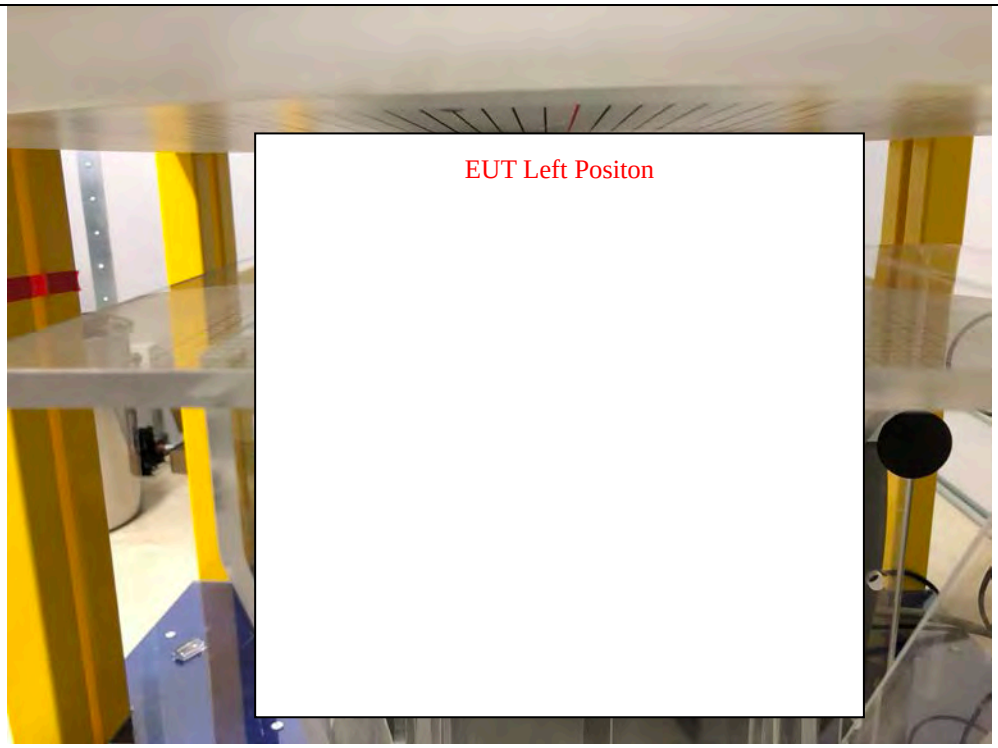

Left of Device 0 mm from Phantom Side view

Annex C. Calibration Reports

COMOSAR E-Field Probe Calibration Report

Ref : ACR.98.1.19.SATU.A

LTA CO.,LTD.
243 JUBUG-RI, YANGJI-MYEON, CHEOIN-GU
YONGIN-CITY, KOREA
MVG COMOSAR DOSIMETRIC E-FIELD PROBE
SERIAL NO.: SN 08/16 EPGO294

Calibrated at MVG US
2105 Barrett Park Dr. - Kennesaw, GA 30144

Calibration Date: 04/08/2019

Summary:

This document presents the method and results from an accredited COMOSAR Dosimetric E-Field Probe calibration performed in MVG USA using the CALISAR / CALIBAIR test bench, for use with a COMOSAR system only. All calibration results are traceable to national metrology institutions.

	Name	Function	Date	Signature
Prepared by :	Jérôme LUC	Product Manager	4/8/2019	
Checked by :	Jérôme LUC	Product Manager	4/8/2019	
Approved by :	Kim RUTKOWSKI	Quality Manager	4/8/2019	

	Customer Name
Distribution :	LTA CO.,LTD.

Issue	Date	Modifications
A	4/8/2019	Initial release

This document shall not be reproduced, except in full or in part, without the written approval of MVG.
The information contained herein is to be used only for the purpose for which it is submitted and is not to be released in whole or part without written approval of MVG.

TABLE OF CONTENTS

1 Device Under Test 4
2 Product Description 4
2.1 General Information 4
3 Measurement Method 4
3.1 Linearity 4
3.2 Sensitivity 5
3.3 Lower Detection Limit 5
3.4 Isotropy 5
3.5 Boundary Effect 5
4 Measurement Uncertainty 5
5 Calibration Measurement Results 6
5.1 Sensitivity in air 6
5.2 Linearity 7
5.3 Sensitivity in liquid 7
5.4 Isotropy 8
6 List of Equipment 9

This document shall not be reproduced, except in full or in part, without the written approval of MVG. The information contained herein is to be used only for the purpose for which it is submitted and is not to be released in whole or part without written approval of MVG.

Copyright © 2019, LTA Co., Ltd.

1 DEVICE UNDER TEST

Device Under Test	
Device Type	COMOSAR DOSIMETRIC E FIELD PROBE
Manufacturer	MVG
Model	SSE2
Serial Number	SN 08/16 EPGO294
Product Condition (new / used)	Used
Frequency Range of Probe	0.15 GHz-6GHz
Resistance of Three Dipoles at Connector	Dipole 1: R1=0.199 MΩ Dipole 2: R2=0.198 MΩ Dipole 3: R3=0.191 MΩ

A yearly calibration interval is recommended.

2 PRODUCT DESCRIPTION

2.1 GENERAL INFORMATION

MVG's COMOSAR E field Probes are built in accordance to the IEEE 1528, OET 65 Bulletin C and CEI/IEC 62209 standards.

Figure 1 – *MVG COMOSAR Dosimetric E field Dipole*

Probe Length	330 mm
Length of Individual Dipoles	2 mm
Maximum external diameter	8 mm
Probe Tip External Diameter	2.5 mm
Distance between dipoles / probe extremity	1 mm

3 MEASUREMENT METHOD

The IEEE 1528, OET 65 Bulletin C, CENELEC EN50361 and CEI/IEC 62209 standards provide recommended practices for the probe calibrations, including the performance characteristics of interest and methods by which to assess their affect. All calibrations / measurements performed meet the fore mentioned standards.

3.1 LINEARITY

The evaluation of the linearity was done in free space using the waveguide, performing a power sweep to cover the SAR range 0.01W/kg to 100W/kg.

This document shall not be reproduced, except in full or in part, without the written approval of MVG. The information contained herein is to be used only for the purpose for which it is submitted and is not to be released in whole or part without written approval of MVG.

Copyright © 2019, LTA Co., Ltd.

3.2 SENSITIVITY

The sensitivity factors of the three dipoles were determined using a two step calibration method (air and tissue simulating liquid) using waveguides as outlined in the standards.

3.3 LOWER DETECTION LIMIT

The lower detection limit was assessed using the same measurement set up as used for the linearity measurement. The required lower detection limit is 10 mW/kg.

3.4 ISOTROPY

The axial isotropy was evaluated by exposing the probe to a reference wave from a standard dipole with the dipole mounted under the flat phantom in the test configuration suggested for system validations and checks. The probe was rotated along its main axis from 0 - 360 degrees in 15 degree steps. The hemispherical isotropy is determined by inserting the probe in a thin plastic box filled with tissue-equivalent liquid, with the plastic box illuminated with the fields from a half wave dipole. The dipole is rotated about its axis (0°–180°) in 15° increments. At each step the probe is rotated about its axis (0°–360°).

3.5 BOUNDARY EFFECT

The boundary effect is defined as the deviation between the SAR measured data and the expected exponential decay in the liquid when the probe is oriented normal to the interface. To evaluate this effect, the liquid filled flat phantom is exposed to fields from either a reference dipole or waveguide. With the probe normal to the phantom surface, the peak spatial average SAR is measured and compared to the analytical value at the surface.

4 MEASUREMENT UNCERTAINTY

The guidelines outlined in the IEEE 1528, OET 65 Bulletin C, CENELEC EN50361 and CEI/IEC 62209 standards were followed to generate the measurement uncertainty associated with an E-field probe calibration using the waveguide technique. All uncertainties listed below represent an expanded uncertainty expressed at approximately the 95% confidence level using a coverage factor of k=2, traceable to the Internationally Accepted Guides to Measurement Uncertainty.

Uncertainty analysis of the probe calibration in waveguide					
ERROR SOURCES	**Uncertainty value (%)**	**Probability Distribution**	**Divisor**	**ci**	**Standard Uncertainty (%)**
Incident or forward power	3.00%	Rectangular	$\sqrt{3}$	1	1.732%
Reflected power	3.00%	Rectangular	$\sqrt{3}$	1	1.732%
Liquid conductivity	5.00%	Rectangular	$\sqrt{3}$	1	2.887%
Liquid permittivity	4.00%	Rectangular	$\sqrt{3}$	1	2.309%
Field homogeneity	3.00%	Rectangular	$\sqrt{3}$	1	1.732%
Field probe positioning	5.00%	Rectangular	$\sqrt{3}$	1	2.887%

This document shall not be reproduced, except in full or in part, without the written approval of MVG. The information contained herein is to be used only for the purpose for which it is submitted and is not to be released in whole or part without written approval of MVG.

Copyright © 2019, LTA Co., Ltd.

Field probe linearity	3.00%	Rectangular	$\sqrt{3}$	1	1.732%
Combined standard uncertainty					5.831%
Expanded uncertainty 95 % confidence level k = 2					12.0%

5 CALIBRATION MEASUREMENT RESULTS

Calibration Parameters	
Liquid Temperature	21 °C
Lab Temperature	21 °C
Lab Humidity	45 %

5.1 SENSITIVITY IN AIR

Normx dipole 1 (μV/(V/m)^2)	Normy dipole 2 (μV/(V/m)^2)	Normz dipole 3 (μV/(V/m)^2)
0.80	0.73	0.75

DCP dipole 1 (mV)	DCP dipole 2 (mV)	DCP dipole 3 (mV)
94	93	90

Calibration curves ei=f(V) (i=1,2,3) allow to obtain H-field value using the formula:

$$E = \sqrt{E_1^2 + E_2^2 + E_3^2}$$

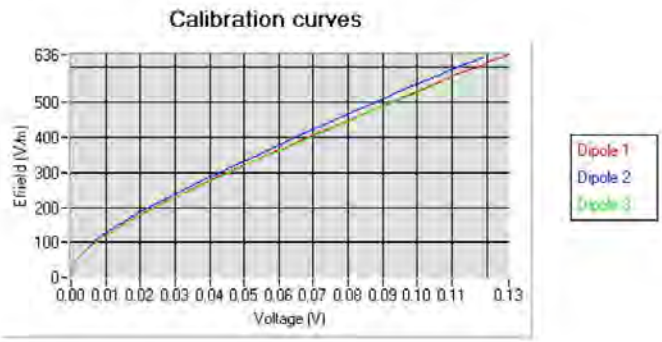

This document shall not be reproduced, except in full or in part, without the written approval of MVG. The information contained herein is to be used only for the purpose for which it is submitted and is not to be released in whole or part without written approval of MVG.

5.2 LINEARITY

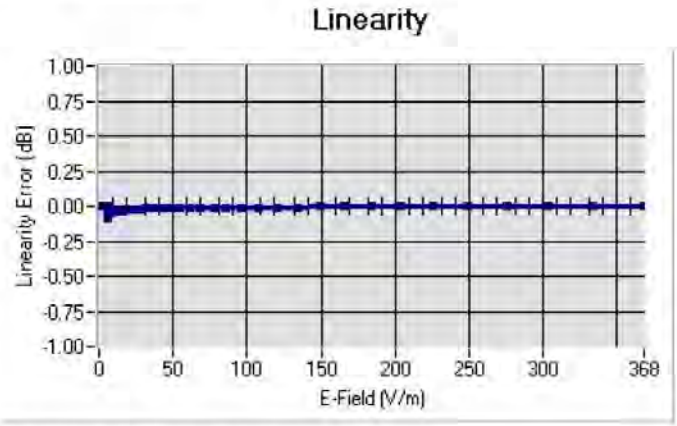

Linearity:[]+/-1.86% (+/-0.08dB)

5.3 SENSITIVITY IN LIQUID

Liquid	Frequency (MHz +/- 100MHz)	Permittivity	Epsilon (S/m)	ConvF
HL150	150	54.12	0.76	1.86
BL150	150	62.52	0.83	1.91
HL300	300	45.04	0.83	1.58
BL300	300	59.07	0.96	1.64
HL450	450	42.17	0.86	1.78
BL450	450	57.65	0.95	1.85
HL850	835	42.19	0.90	1.69
BL850	835	54.67	1.01	1.76
HL1800	1800	41.68	1.46	1.74
BL1800	1800	53.86	1.46	1.80
HL2000	2000	38.26	1.38	1.93
BL2000	2000	52.70	1.51	1.99
HL2450	2450	37.50	1.80	2.00
BL2450	2450	53.22	1.89	2.08

LOWER DETECTION LIMIT: 9mW/kg

This document shall not be reproduced, except in full or in part, without the written approval of MVG. The information contained herein is to be used only for the purpose for which it is submitted and is not to be released in whole or part without written approval of MVG.

Copyright © 2019, LTA Co., Ltd.

5.4 ISOTROPY

HL850 MHz

- Axial isotropy: 0.04 dB
- Hemispherical isotropy: 0.06 dB

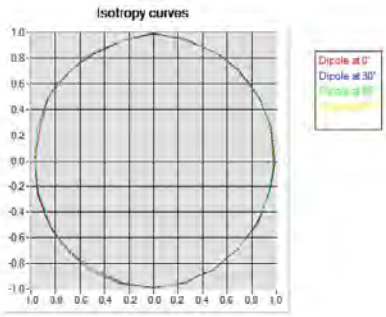

HL1800 MHz

- Axial isotropy: 0.04 dB
- Hemispherical isotropy: 0.08 dB

This document shall not be reproduced, except in full or in part, without the written approval of MVG. The information contained herein is to be used only for the purpose for which it is submitted and is not to be released in whole or part without written approval of MVG.

Copyright © 2019, LTA Co., Ltd.

6 LIST OF EQUIPMENT

Equipment Summary Sheet				
Equipment Description	**Manufacturer / Model**	**Identification No.**	**Current Calibration Date**	**Next Calibration Date**
Flat Phantom	MVG	SN-20/09-SAM71	Validated. No cal required.	Validated. No cal required.
COMOSAR Test Bench	Version 3	NA	Validated. No cal required.	Validated. No cal required.
Network Analyzer	Rhode & Schwarz ZVA	SN100132	02/2019	02/2022
Reference Probe	MVG	EP 94 SN 37/08	10/2018	10/2019
Multimeter	Keithley 2000	1188656	01/2017	01/2020
Signal Generator	Agilent E4438C	MY49070581	01/2017	01/2020
Amplifier	Aethercomm	SN 046	Characterized prior to test. No cal required.	Characterized prior to test. No cal required.
Power Meter	HP E4418A	US38261498	01/2017	01/2020
Power Sensor	HP ECP-E26A	US37181460	01/2017	01/2020
Directional Coupler	Narda 4216-20	01386	Characterized prior to test. No cal required.	Characterized prior to test. No cal required.
Waveguide	Mega Industries	069Y7-158-13-712	Validated. No cal required.	Validated. No cal required.
Waveguide Transition	Mega Industries	069Y7-158-13-701	Validated. No cal required.	Validated. No cal required.
Waveguide Termination	Mega Industries	069Y7-158-13-701	Validated. No cal required.	Validated. No cal required.
Temperature / Humidity Sensor	Control Company	150798832	11/2017	11/2020

This document shall not be reproduced, except in full or in part, without the written approval of MVG. The information contained herein is to be used only for the purpose for which it is submitted and is not to be released in whole or part without written approval of MVG.

Dipole 2450 MHz (S/N : SN 12/13 DIP2G450-228)

SAR Reference Dipole Calibration Report

Ref : ACR.72.7.18.SATU.A

LTA CO.,LTD.
243 JUBUG-RI, YANGJI-MYEON, CHEOIN-GU
YONGIN-CITY, KOREA
MVG COMOSAR REFERENCE DIPOLE
FREQUENCY: 2450 MHZ
SERIAL NO.: SN 12/13 DIP2G450-228

Calibrated at MVG US
2105 Barrett Park Dr. - Kennesaw, GA 30144

Calibration Date: 03/13/2018

Summary:

This document presents the method and results from an accredited SAR reference dipole calibration performed in MVG USA using the COMOSAR test bench. All calibration results are traceable to national metrology institutions.

SAR REFERENCE DIPOLE CALIBRATION REPORT

Ref: ACR.72.7.18.SATU.A

	Name	Function	Date	Signature
Prepared by :	Jérôme LUC	Product Manager	3/13/2018	
Checked by :	Jérôme LUC	Product Manager	3/13/2018	
Approved by :	Kim RUTKOWSKI	Quality Manager	3/13/2018	

	Customer Name
Distribution :	LTA CO.,LTD.

Issue	Date	Modifications
A	3/13/2018	Initial release

Page: 2/11

This document shall not be reproduced, except in full or in part, without the written approval of MVG. The information contained herein is to be used only for the purpose for which it is submitted and is not to be released in whole or part without written approval of MVG.

TABLE OF CONTENTS

1 Introduction 4
2 Device Under Test 4
3 Product Description 4
3.1 General Information 4
4 Measurement Method 5
4.1 Return Loss Requirements 5
4.2 Mechanical Requirements 5
5 Measurement Uncertainty 5
5.1 Return Loss 5
5.2 Dimension Measurement 5
5.3 Validation Measurement 5
6 Calibration Measurement Results 6
6.1 Return Loss and Impedance In Head Liquid 6
6.2 Return Loss and Impedance In Body Liquid 6
6.3 Mechanical Dimensions 6
7 Validation measurement 7
7.1 Head Liquid Measurement 7
7.2 SAR Measurement Result With Head Liquid 8
7.3 Body Liquid Measurement 9
7.4 SAR Measurement Result With Body Liquid 10
8 List of Equipment 11

This document shall not be reproduced, except in full or in part, without the written approval of MVG. The information contained herein is to be used only for the purpose for which it is submitted and is not to be released in whole or part without written approval of MVG.

1 INTRODUCTION

This document contains a summary of the requirements set forth by the IEEE 1528, FCC KDBs and CEI/IEC 62209 standards for reference dipoles used for SAR measurement system validations and the measurements that were performed to verify that the product complies with the fore mentioned standards.

2 DEVICE UNDER TEST

Device Under Test	
Device Type	COMOSAR 2450 MHz REFERENCE DIPOLE
Manufacturer	MVG
Model	SID2450
Serial Number	SN 12/13 DIP2G450-228
Product Condition (new / used)	Used

A yearly calibration interval is recommended.

3 PRODUCT DESCRIPTION

3.1 GENERAL INFORMATION

MVG's COMOSAR Validation Dipoles are built in accordance to the IEEE 1528, FCC KDBs and CEI/IEC 62209 standards. The product is designed for use with the COMOSAR test bench only.

Figure 1 – *MVG COMOSAR Validation Dipole*

This document shall not be reproduced, except in full or in part, without the written approval of MVG. The information contained herein is to be used only for the purpose for which it is submitted and is not to be released in whole or part without written approval of MVG.

Copyright © 2019, LTA Co., Ltd.

4 MEASUREMENT METHOD

The IEEE 1528, FCC KDBs and CEI/IEC 62209 standards provide requirements for reference dipoles used for system validation measurements. The following measurements were performed to verify that the product complies with the fore mentioned standards.

4.1 RETURN LOSS REQUIREMENTS

The dipole used for SAR system validation measurements and checks must have a return loss of -20 dB or better. The return loss measurement shall be performed against a liquid filled flat phantom, with the phantom constructed as outlined in the fore mentioned standards.

4.2 MECHANICAL REQUIREMENTS

The IEEE Std. 1528 and CEI/IEC 62209 standards specify the mechanical components and dimensions of the validation dipoles, with the dimensions frequency and phantom shell thickness dependent. The COMOSAR test bench employs a 2 mm phantom shell thickness therefore the dipoles sold for use with the COMOSAR test bench comply with the requirements set forth for a 2 mm phantom shell thickness.

5 MEASUREMENT UNCERTAINTY

All uncertainties listed below represent an expanded uncertainty expressed at approximately the 95% confidence level using a coverage factor of k=2, traceable to the Internationally Accepted Guides to Measurement Uncertainty.

5.1 RETURN LOSS

The following uncertainties apply to the return loss measurement:

Frequency band	Expanded Uncertainty on Return Loss
400-6000MHz	0.1 dB

5.2 DIMENSION MEASUREMENT

The following uncertainties apply to the dimension measurements:

Length (mm)	Expanded Uncertainty on Length
3 - 300	0.05 mm

5.3 VALIDATION MEASUREMENT

The guidelines outlined in the IEEE 1528, FCC KDBs, CENELEC EN50361 and CEI/IEC 62209 standards were followed to generate the measurement uncertainty for validation measurements.

Scan Volume	Expanded Uncertainty
1 g	20.3 %

This document shall not be reproduced, except in full or in part, without the written approval of MVG. The information contained herein is to be used only for the purpose for which it is submitted and is not to be released in whole or part without written approval of MVG.

Copyright © 2019, LTA Co., Ltd.

10 g	20.1 %

6 CALIBRATION MEASUREMENT RESULTS

6.1 RETURN LOSS AND IMPEDANCE IN HEAD LIQUID

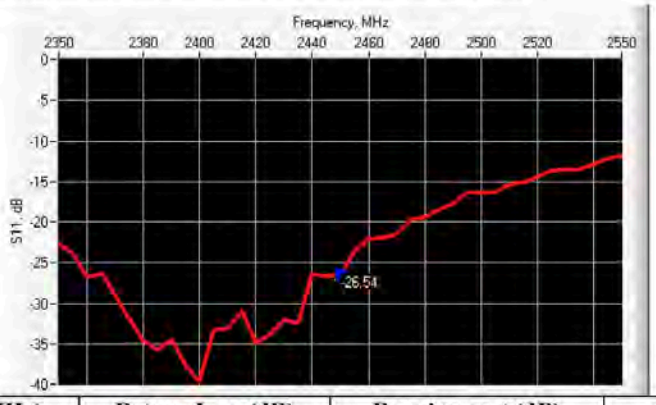

Frequency (MHz)	Return Loss (dB)	Requirement (dB)	Impedance
2450	-26.54	-20	48.9 Ω - 4.6 jΩ

6.2 RETURN LOSS AND IMPEDANCE IN BODY LIQUID

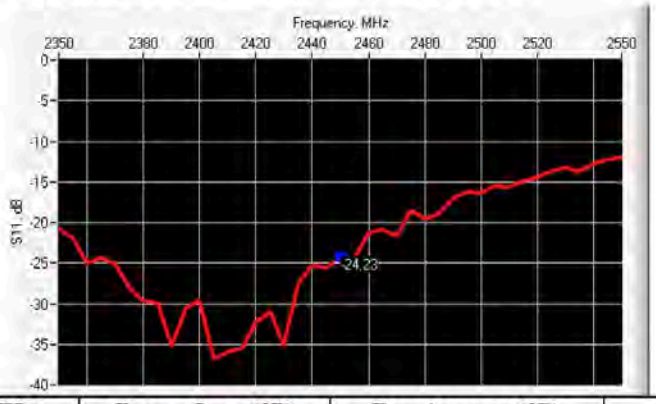

Frequency (MHz)	Return Loss (dB)	Requirement (dB)	Impedance
2450	-24.23	-20	53.8 Ω - 5.0 jΩ

6.3 MECHANICAL DIMENSIONS

Frequency MHz	L mm		h mm		d mm	
	required	measured	required	measured	required	measured
300	420.0 ±1 %.		250.0 ±1 %.		6.35 ±1 %.	

This document shall not be reproduced, except in full or in part, without the written approval of MVG. The information contained herein is to be used only for the purpose for which it is submitted and is not to be released in whole or part without written approval of MVG.

450	290.0 ±1 %.		166.7 ±1 %.		6.35 ±1 %.	
750	176.0 ±1 %.		100.0 ±1 %.		6.35 ±1 %.	
835	161.0 ±1 %.		89.8 ±1 %.		3.6 ±1 %.	
900	149.0 ±1 %.		83.3 ±1 %.		3.6 ±1 %.	
1450	89.1 ±1 %.		51.7 ±1 %.		3.6 ±1 %.	
1500	80.5 ±1 %.		50.0 ±1 %.		3.6 ±1 %.	
1640	79.0 ±1 %.		45.7 ±1 %.		3.6 ±1 %.	
1750	75.2 ±1 %.		42.9 ±1 %.		3.6 ±1 %.	
1800	72.0 ±1 %.		41.7 ±1 %.		3.6 ±1 %.	
1900	68.0 ±1 %.		39.5 ±1 %.		3.6 ±1 %.	
1950	66.3 ±1 %.		38.5 ±1 %.		3.6 ±1 %.	
2000	64.5 ±1 %.		37.5 ±1 %.		3.6 ±1 %.	
2100	61.0 ±1 %.		35.7 ±1 %.		3.6 ±1 %.	
2300	55.5 ±1 %.		32.6 ±1 %.		3.6 ±1 %.	
2450	51.5 ±1 %.	PASS	30.4 ±1 %.	PASS	3.6 ±1 %.	PASS
2600	48.5 ±1 %.		28.8 ±1 %.		3.6 ±1 %.	
3000	41.5 ±1 %.		25.0 ±1 %.		3.6 ±1 %.	
3500	37.0±1 %.		26.4 ±1 %.		3.6 ±1 %.	
3700	34.7±1 %.		26.4 ±1 %.		3.6 ±1 %.	

7 VALIDATION MEASUREMENT

The IEEE Std. 1528, FCC KDBs and CEI/IEC 62209 standards state that the system validation measurements must be performed using a reference dipole meeting the fore mentioned return loss and mechanical dimension requirements. The validation measurement must be performed against a liquid filled flat phantom, with the phantom constructed as outlined in the fore mentioned standards. Per the standards, the dipole shall be positioned below the bottom of the phantom, with the dipole length centered and parallel to the longest dimension of the flat phantom, with the top surface of the dipole at the described distance from the bottom surface of the phantom.

7.1 HEAD LIQUID MEASUREMENT

Frequency MHz	Relative permittivity (ε_r')		Conductivity (σ) S/m	
	required	measured	required	measured
300	45.3 ±5 %		0.87 ±5 %	
450	43.5 ±5 %		0.87 ±5 %	
750	41.9 ±5 %		0.89 ±5 %	
835	41.5 ±5 %		0.90 ±5 %	
900	41.5 ±5 %		0.97 ±5 %	
1450	40.5 ±5 %		1.20 ±5 %	
1500	40.4 ±5 %		1.23 ±5 %	
1640	40.2 ±5 %		1.31 ±5 %	
1750	40.1 ±5 %		1.37 ±5 %	

This document shall not be reproduced, except in full or in part, without the written approval of MVG. The information contained herein is to be used only for the purpose for which it is submitted and is not to be released in whole or part without written approval of MVG.

Copyright © 2019, LTA Co., Ltd.

1800	40.0 ±5 %		1.40 ±5 %	
1900	40.0 ±5 %		1.40 ±5 %	
1950	40.0 ±5 %		1.40 ±5 %	
2000	40.0 ±5 %		1.40 ±5 %	
2100	39.8 ±5 %		1.49 ±5 %	
2300	39.5 ±5 %		1.67 ±5 %	
2450	39.2 ±5 %	PASS	1.80 ±5 %	PASS
2600	39.0 ±5 %		1.96 ±5 %	
3000	38.5 ±5 %		2.40 ±5 %	
3500	37.9 ±5 %		2.91 ±5 %	

7.2 SAR MEASUREMENT RESULT WITH HEAD LIQUID

The IEEE Std. 1528 and CEI/IEC 62209 standards state that the system validation measurements should produce the SAR values shown below (for phantom thickness of 2 mm), within the uncertainty for the system validation. All SAR values are normalized to 1 W forward power. In bracket, the measured SAR is given with the used input power.

Software	OPENSAR V4
Phantom	SN 20/09 SAM71
Probe	SN 18/11 EPG122
Liquid	Head Liquid Values: eps' : 37.5 sigma : 1.80
Distance between dipole center and liquid	10.0 mm
Area scan resolution	dx=8mm/dy=8mm
Zoon Scan Resolution	dx=5mm/dy=5mm/dz=5mm
Frequency	2450 MHz
Input power	20 dBm
Liquid Temperature	21 °C
Lab Temperature	21 °C
Lab Humidity	45 %

Frequency MHz	1 g SAR (W/kg/W)		10 g SAR (W/kg/W)	
	required	measured	required	measured
300	2.85		1.94	
450	4.58		3.06	
750	8.49		5.55	
835	9.56		6.22	
900	10.9		6.99	
1450	29		16	
1500	30.5		16.8	
1640	34.2		18.4	
1750	36.4		19.3	
1800	38.4		20.1	

This document shall not be reproduced, except in full or in part, without the written approval of MVG. The information contained herein is to be used only for the purpose for which it is submitted and is not to be released in whole or part without written approval of MVG.

1900	39.7		20.5	
1950	40.5		20.9	
2000	41.1		21.1	
2100	43.6		21.9	
2300	48.7		23.3	
2450	52.4	54.24 (5.42)	24	23.89 (2.39)
2600	55.3		24.6	
3000	63.8		25.7	
3500	67.1		25	
3700	67.4		24.2	

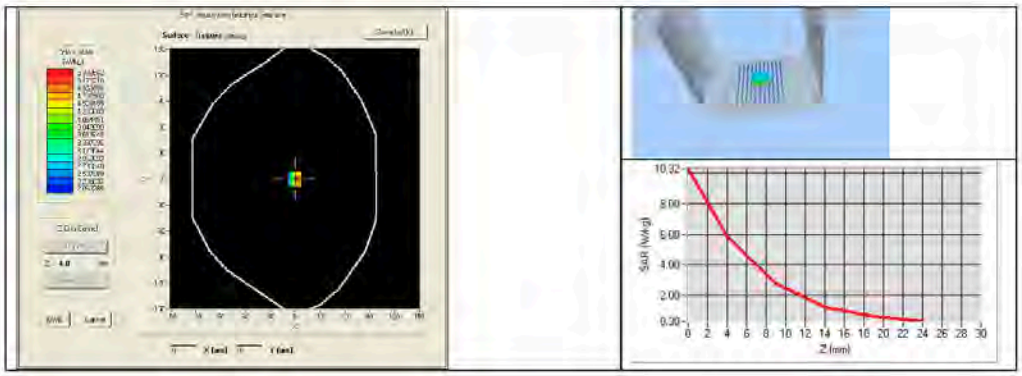

7.3 BODY LIQUID MEASUREMENT

Frequency MHz	Relative permittivity (ε_r')		Conductivity (σ) S/m	
	required	measured	required	measured
150	61.9 ±5 %		0.80 ±5 %	
300	58.2 ±5 %		0.92 ±5 %	
450	56.7 ±5 %		0.94 ±5 %	
750	55.5 ±5 %		0.96 ±5 %	
835	55.2 ±5 %		0.97 ±5 %	
900	55.0 ±5 %		1.05 ±5 %	
915	55.0 ±5 %		1.06 ±5 %	
1450	54.0 ±5 %		1.30 ±5 %	
1610	53.8 ±5 %		1.40 ±5 %	
1800	53.3 ±5 %		1.52 ±5 %	
1900	53.3 ±5 %		1.52 ±5 %	
2000	53.3 ±5 %		1.52 ±5 %	
2100	53.2 ±5 %		1.62 ±5 %	

This document shall not be reproduced, except in full or in part, without the written approval of MVG. The information contained herein is to be used only for the purpose for which it is submitted and is not to be released in whole or part without written approval of MVG.

2300	52.9 ±5 %		1.81 ±5 %	
2450	52.7 ±5 %	PASS	1.95 ±5 %	PASS
2600	52.5 ±5 %		2.16 ±5 %	
3000	52.0 ±5 %		2.73 ±5 %	
3500	51.3 ±5 %		3.31 ±5 %	
3700	51.0 ±5 %		3.55 ±5 %	
5200	49.0 ±10 %		5.30 ±10 %	
5300	48.9 ±10 %		5.42 ±10 %	
5400	48.7 ±10 %		5.53 ±10 %	
5500	48.6 ±10 %		5.65 ±10 %	
5600	48.5 ±10 %		5.77 ±10 %	
5800	48.2 ±10 %		6.00 ±10 %	

7.4 SAR MEASUREMENT RESULT WITH BODY LIQUID

Software	OPENSAR V4
Phantom	SN 20/09 SAM71
Probe	SN 18/11 EPG122
Liquid	Body Liquid Values: eps' : 53.2 sigma : 1.89
Distance between dipole center and liquid	10.0 mm
Area scan resolution	dx=8mm/dy=8mm
Zoon Scan Resolution	dx=5mm/dy=5mm/dz=5mm
Frequency	2450 MHz
Input power	20 dBm
Liquid Temperature	21 °C
Lab Temperature	21 °C
Lab Humidity	45 %

Frequency MHz	1 g SAR (W/kg/W)	10 g SAR (W/kg/W)
	measured	measured
2450	52.59 (5.26)	24.21 (2.42)

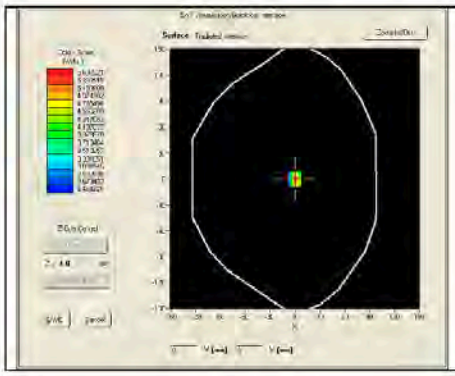

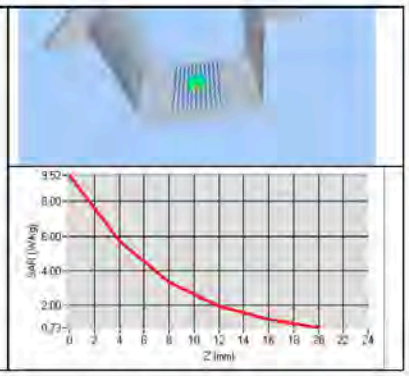

This document shall not be reproduced, except in full or in part, without the written approval of MVG. The information contained herein is to be used only for the purpose for which it is submitted and is not to be released in whole or part without written approval of MVG.

Copyright © 2019, LTA Co., Ltd.

8 LIST OF EQUIPMENT

Equipment Summary Sheet				
Equipment Description	**Manufacturer / Model**	**Identification No.**	**Current Calibration Date**	**Next Calibration Date**
SAM Phantom	MVG	SN-20/09-SAM71	Validated. No cal required.	Validated. No cal required.
COMOSAR Test Bench	Version 3	NA	Validated. No cal required.	Validated. No cal required.
Network Analyzer	Rhode & Schwarz ZVA	SN100132	02/2016	02/2019
Calipers	Carrera	CALIPER-01	01/2017	01/2020
Reference Probe	MVG	EPG122 SN 18/11	10/2017	10/2018
Multimeter	Keithley 2000	1188656	01/2017	01/2020
Signal Generator	Agilent E4438C	MY49070581	01/2017	01/2020
Amplifier	Aethercomm	SN 046	Characterized prior to test. No cal required.	Characterized prior to test. No cal required.
Power Meter	HP E4418A	US38261498	01/2017	01/2020
Power Sensor	HP ECP-E26A	US37181460	01/2017	01/2020
Directional Coupler	Narda 4216-20	01386	Characterized prior to test. No cal required.	Characterized prior to test. No cal required.
Temperature and Humidity Sensor	Control Company	150798832	11/2017	11/2020

This document shall not be reproduced, except in full or in part, without the written approval of MVG. The information contained herein is to be used only for the purpose for which it is submitted and is not to be released in whole or part without written approval of MVG.

Copyright © 2019, LTA Co., Ltd.