AT&T

User's Manual

WPS1

Waterproof Bluetooth Wireless Speaker

Welcome | Thank you for purchasing the WPS1

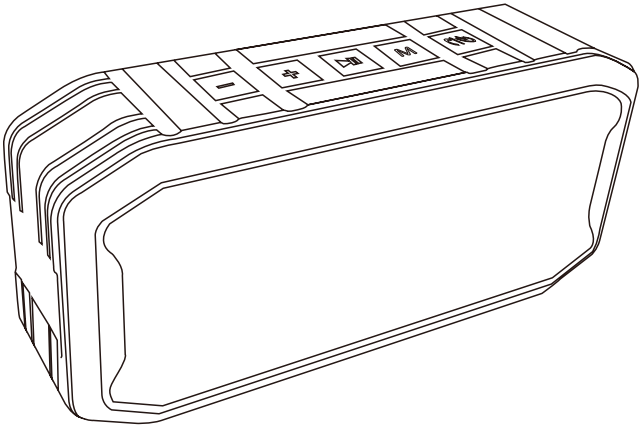

Introduction

Features

- High powered Bluetooth® waterproof speaker
- Wireless streaming through Bluetooth enabled devices
- Built-in microphone
- Auxiliary input to play music from any device
- Automatically connects to any paired devices
- Hands-free speakerphone

What’s included

Unpack the speaker system and make sure all accessories are put aside so they will not be lost.

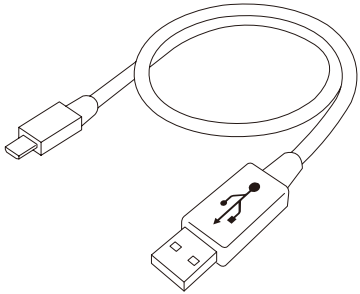

Micro USB cable

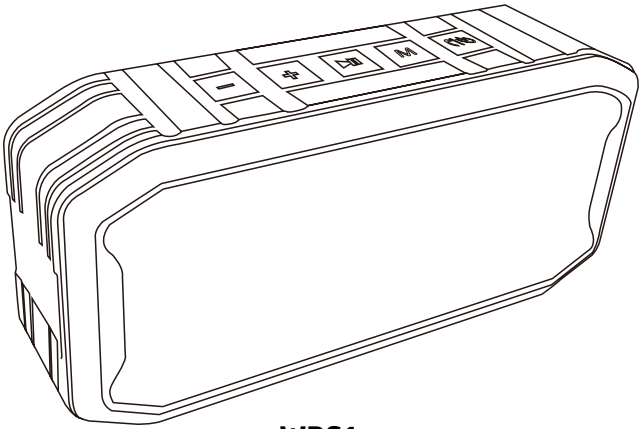

WPS1

Content

Introduction
Features 2

What's Included 3

Safety Information
Warning! 5
Important Safety Instructions 6

Getting Started
Location of Main Unit Controls 8
Charging the WPS1 9
LED Status Indicator 9
Powering ON/OFF 9

Operational Instructions
Bluetooth Operation 10
Setting up your WPS1 for pairing 10
Pairing a Bluetooth device for the first time 10
Using the auxiliary input connection (3.5mm) 11
Function-M 11
Button controls 12
Call function 12

Troubleshooting 12

Specifications 12

Compliance with FCC Regulations 13

Warranty Information
Limited Warranty 14

Safety Information

Warning!

TO REDUCE THE RISK OF FIRE OR ELECTRIC SHOCK, DO NOT EXPOSE THIS APPLIANCE TO DRIPPING OR SPLASHING LIQUIDS.

The lightning flash and arrowhead symbol within the triangle is a warning sign alerting you of “dangerous voltage” inside the product.

WARNING: To reduce the risk of electric shock, do not remove cover (or back). No user-serviceable parts inside. Refer servicing to qualified service personnel.

The exclamation point within the triangle is a warning sign alerting you of important instructions accompanying the product.

NOTES: Caution symbols are printed on rear of unit.
Please refer to user’s manual. This device complies with Part 15 of the FCC Rules. Operation is subject to the condition that this device does not cause harmful interference.

Safety Information

Important Safety Instructions

When used in the directed manner, this unit has been designed and manufactured to ensure your personal safety. However, improper use can result in potential electrical shock or fire hazards. Please read all safety and operating instructions carefully before installation and use, and keep these instructions handy for future reference. Take special note of all warnings listed in this user's manual and on the unit.

1. **Cleaning -** Unplug the unit from the wall outlet before cleaning. Clean the unit using a damp cloth; do not use liquid or aerosol cleaners.
2. **Attachments -** Do not use attachments that are not recommended by the manufacturer.
3. **Placement -** Do not place the unit on an unstable table, stand, tripod, or bracket. This may result in serious personal injuries and damage to the unit.
4. **Ventilation -** The unit should be situated so that its location or position does not interfere with its proper ventilation. For example, it should not be situated on a bed, sofa, rug or similar surface that may block ventilation openings. Also, it should not be placed in a built-in installation, such as a bookcase or cabinet, which may impede the flow of air through the ventilation openings.
5. **Periods of Non-use -** If the unit is to be left unused for an extended period of time, such as a month or longer, the power cable should be unplugged from the unit to prevent damage or corrosion.
6. **Power Source -** The unit should be connected to a power supply only of the type described in the operating instructions or as marked on the unit. If you are not sure, please consult the dealer or local power company.
7. **Power Cord protection -** Power supply cord should be routed so that it is not likely to be walked on or pinched by items placed upon or against them. It is always better to have a clear area from where the cable exits the unit to where it is plugged into an AC outlet.

8. **Lightning -** Unplug the unit from the wall outlet and disconnect the antenna or cable system during a lightning storm or when it is left unattended and unused for long periods of time. This will prevent damage to the product due to lightning and power-line surges.
9. **Overloading -** Do not overload wall outlets, extension cords, or integral convenience receptacles as this can result in a risk of fire or electric shock.
10. **Heat -** The unit should be situated away from heat sources such as radiators, heat registers, stoves or other appliances (including amplifiers) that produce heat.
11. **Damage Requiring Service -** The unit should be serviced by qualified service personnel when:
    A. the power supply cable or plug has been damaged.
    B. objects have fallen into or liquid has been spilled onto the enclosure.
    C. the unit has been exposed to rain.
    D. the unit has been dropped or the enclosure damaged.
    E. the unit exhibits a marked change in performance or does not operate normally.
12. **Servicing -** The user should not attempt to service the unit beyond those methods described in the user's manual. Opening or removing covers will expose you to dangerous voltage and other hazards. Service methods not covered in the user's manual should be referred to qualified service personnel.
13. **Safety Check -** Upon completion of any service or repair to the unit, ask the service technician to perform safety checks to determine that the product is in proper working condition.
14. **Built-in Battery Care -** This device contains a rechargeable Lithium ion battery. The battery can be charged and discharged hundreds of times. Unplug the charger from the electrical outlet and product when not in use. Do not leave a fully charged battery connected to a charger, since overcharging may shorten its lifetime. Leaving the product in hot or cold places will reduce the capacity and lifetime of the battery.

Getting Started

Location of Main Unit Controls

Top View

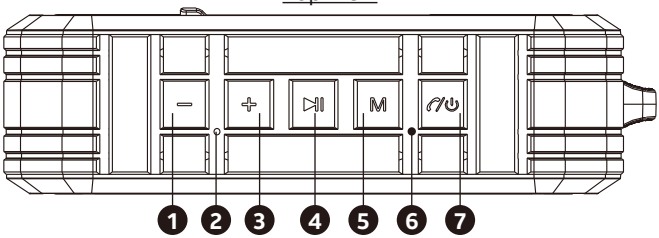

Back View

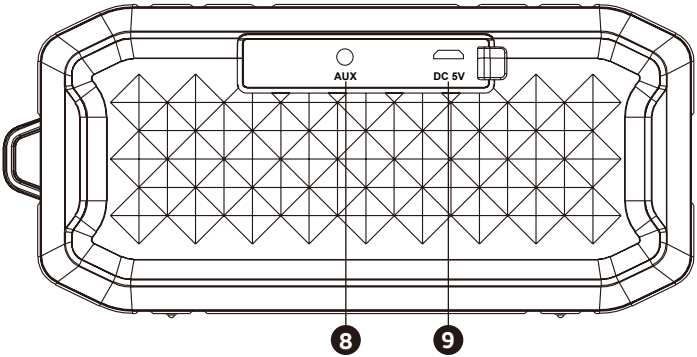

1. Decrease Volume - | Skip to previous track
2. LED light - charging
3. Increase Volume + | Skip to next track
4. Play/Pause Music
5. Mode
6. LED light - Bluetooth indicator
7. Power button turn On/Off Answer/End Call
8. 3.5mm Aux input
9. Micro USB charging port

Getting Started

Charging the WPS1

1. Connect a Micro USB charging cable to the charging port on the WPS1.
2. Connect the USB end of the Micro USB cable to your computer's USB port or an AC USB adapter.
3. When the speaker is charging, the LED indicator light located on the top panel of the speaker will turn red.
4. Once the speaker is fully charged, the LED indicator light will turn off.

LED Status Indicator

Bluetooth LED Indicator

- Blinking Blue LED: Bluetooth on with no connection. (Ready to pair)
- Solid Blue LED: Bluetooth paired and connected

Powering ON/OFF

1. To power the speaker on, press and hold the power button until you hear an ascending audible tone and the Bluetooth LED light starts blinking.
2. To power the speaker off, press and hold the power button until you hear a descending audible tone. The Bluetooth LED light will turn off.

Operational Instructions

Bluetooth Operation

The WPS1 connects with most Bluetooth devices inlcuding iPad® devices, iPhone® devices, and iPod® touch devices, and most smartphones, laptops, and tablets.

Setting Up Your WPS1 for Pairing

1. Turn on the WPS1 wireless speaker
2. The Blue LED light will start to flash, indicating that the WPS1 is now ready to be paired with your Bluetooth device.

Pairing a Bluetooth Device for the First Time

1. Navigate to the Bluetooth manager on your Bluetooth device
2. Search Bluetooth devices and select 'WPS1' to start connecting.
3. Once paired, the WPS1 will beep and the Bluetooth LED light will turn solid blue.
4. Your Bluetooth device is now paired, connected, and ready to

Mode Button

Press the Mode (M) button, to toggle between Bluetooth and Auxiliary function.

Operational Instructions

Using the Auxiliary Input Connection (3.5mm)

You can connect the audio output of an external device, such as a MP3 player or smartphone, to the WPS1 for listening to the audio of that device through the speaker system.

1. Use a standard stereo headphone (3.5 mm) cable to connect the "headphone-out" or "audio line-out" of the device to the aux-in jack of this speaker system.
2. Turn on the speaker system and the external device (eg. MP3-player or smartphone).
3. Make sure the speaker system is not connected to any Bluetooth devices.
4. Start playback of the external device and adjust the volume of the docking station to the desired level.
5. Remember to switch off the speaker system when you are finished using the external device.

Button Controls

Lower volume

Press and hold **| - |** button to decrease the volume level

Increase volume

Press and hold **| + |** button to increase the volume level

Skip backward

Press the **| - |** button to skip to the previous track

Skip forward

Press the **| + |** button to skip to the next track

Call Function

To answer any incoming calls, press the answer call button.
To end the call, press the same button again.

Troubleshooting

Symptom	Solution
Music is not streaming over Bluetooth	- Check if both devices are paired and connected over Bluetooth. - Make sure there isn't a 3.5mm cable connected to the aux input on the back of the speaker. - Restart the WPS1 to auto-connect with your Bluetooth device.
No power	- Recharge your speaker using included cable. If the problem persists try a different Micro USB cable.
Battery is not charging	- Verify WPS1 is plugged in properly and into a proper power source.

Specifications

Power Output: 3W
Play time: Up to 4-5 hours
Impedance: 4Ω
Rechargeable Battery: 3.7V/1200mAh (Built-In)
Battery charging time: 2-3 hours

Remarks: If troubleshooting does not eliminate the problem, disconnect the DC IN plug from the back of unit and reconnect it after a few seconds. This resets the unit to it's factory default settings and results in the deletion of all previous settings. In case the problem still exists, see warranty information on pages 14 and 15 to obtain service.

Compliance with FCC Regulations

Caution!

The user is cautioned that changes or modifications not expressly approved by the party responsible for compliance could void the user's authority to operate the equipment.

The equipment has been tested and found to comply with the limits for a Class B digital device, pursuant to Part 15 of the FCC Rules. These limits are designed to provide reasonable protection against harmful interference in a residential installation. This equipment generates, uses, and can radiate Radio frequency energy and, if not installed and used in accordance with the instructions, may cause harmful interference to Radio communications.

However, there is no guarantee that interference will not occur in a particular installation. If this equipment does cause harmful interference to Radio or television reception, which can be determined by turning the equipment off and on, the user is encouraged to try to correct the interference by one or more of the following measures:

- Reorient or relocate the receiving antenna.
- Increase the separation between the equipment and receiver.
- Connect the equipment into an outlet on a circuit different from that to which the receiver is connected.
- Consult the dealer or an experienced Radio/television technician for assistance.

This equipment complies with FCC's RF radiation exposure limits set forth for an uncontrolled environment. The antenna(s) used for this transmitter must be installed and operated to provide a separation distance of at least 20 cm from all persons and must not be collocated or operating in conjunction with any other antenna or transmitter. Installers must ensure that 20 cm separation distance will be maintained between the device (excluding its handset) and users.

THE SPECIFICATION AND EXTERNAL APPEARANCE OF THE SPEAKER SYSTEM ARE SUBJECT TO CHANGE WITHOUT PRIOR NOTICE.

Warranty Information

Limited Warranty

The AT&T brands are used under license. Any repair, replacement, or warranty service, and all questions about this product should be directed to Concept 101 LLC at www.att.com/electronics or call 1 (888) 920-8680 from the USA or Canada.

Concept 101 LLC warrants to the original purchaser that the product will be free from defects in material, parts and workmanship for the period designated for this product. The warranty commences the day the product is purchased and covers up to a period of one (1) year. Concept 101 LLC agrees that it will, at its option, replace the defective product with either a new or remanufactured headset equivalent to your original purchase during the warranty period. Should the Parts warranty period exceed the Labor warranty period, Concept 101 LLC will supply at no charge for the remainder of the Parts warranty, any new or remanufactured replacement parts as required by the product. During this period all labor and service charges will become the responsibility of the customer.

Exclusions: This warranty does not apply to the appearance or exterior of the product which may have been damaged or defaced, altered or modified in design or construction. This warranty does not apply if the serial number is altered or removed, or if there is any damage due to power line surge, user damage to the AC power cord, connection to improper voltage source, general misuse, accidents, or repair attempts by unauthorized service agents. Other exclusions include ear pads, rechargeable and non-rechargeable batteries.

REPAIR OR REPLACEMENT AS PROVIDED UNDER THIS WARRANTY IS THE EXCLUSIVE REMEDY OF THE CUSTOMER; Concept 101 LLC SHALL NOT BE LIABLE FOR ANY INCIDENTAL OR CONSEQUENTIAL DAMAGES FOR BREACH OF ANY EXPRESS OR IMPLIED WARRANTY ON THIS PRODUCT, EXCEPT TO THE EXTENT PROHIBITED BY APPLICABLE LAW. ANY IMPLIED WARRANTY OF MERCHANTABILITY OF FITNESS FOR A PARTICULAR PURPOSE ON THIS PRODUCT IS LIMITED TO THE DURATION OF THE WARRANTY.

Some states do not allow the exclusion or limitations of incidental or consequential damages, or limitations on how long the warranty lasts. In these cases the above exclusions or limitations may not apply to you. This warranty gives you specific legal rights and you may also have other rights which vary from state to state.

Obtaining Service: To obtain service, product literature, supplies or accessories please call 1 888-920-8680, or visit our website, www.att.com/electronics, to create a ticket for exchange/repair. Please make sure to provide the date of purchase, model number and a brief description of the problem. Our customer service representative will contact you or send detailed return instructions.

Concept 101 LLC does not warrant that the unit will work properly in all environmental conditions, and makes no warranty and representation, either implied or expressed, with respect to the quality, performance, merchantability, or fitness for a particular purpose other than the purpose identified within this user's manual. Concept 101 LLC has made every effort to ensure that this user's manual is accurate and disclaims liability for any inaccuracies or omissions that may have occurred. Information in this user's manual is subject to change without notice and does not represent a commitment on the part of Concept 101 LLC. Concept 101 LLC reserves the right to make improvements to this user's manual and/or to the products described in this user's manual at any time without notice. If you find information in this manual that is incorrect, misleading, or incomplete, please contact us through our website.

You may also contact your local recycling center for information on where to drop off the spent battery, or call **1-800-8-BATTERY.**

RBRC and 1-800-8-BATTERY are registered trademarks of the Rechargeable Battery Recycling Corporation.

AT&T

www.att.com/electronics

The Bluetooth word mark and logos are registered trademarks owned by Bluetooth SIG, Inc.

iPhone, iPod, and iPad are registered trademarks of Apple Inc., registered in the U.S. and other countries.
Other trademarks and trade names are those of their respective owners.

© 2020 Concept 101 LLC. All Rights Reserved. AT&T and the AT&T logo are trademarks of AT&T Intellectual Property licensed to Concept 101 LLC, New York, New York 10018. Issue 1.1 AT&T 8/2020.

FCC Warning Statement

Changes or modifications not expressly approved by the party responsible for compliance could void the user's authority to operate the equipment. This equipment has been tested and found to comply with the limits for a Class B digital device, pursuant to Part 15 of the FCC Rules. These limits are designed to provide reasonable protection against harmful interference in a residential installation. This equipment generates uses and can radiate radio frequency energy and, if not installed and used in accordance with the instructions, may cause harmful interference to radio communications. However, there is no guarantee that interference will not occur in a particular installation. If this equipment does cause harmful interference to radio or television reception, which can be determined by turning the equipment off and on, the user is encouraged to try to correct the interference by one or more of the following measures:

- Reorient or relocate the receiving antenna.
- Increase the separation between the equipment and receiver.
- Connect the equipment into an outlet on a circuit different from that to which the receiver is connected.
- Consult the dealer or an experienced radio/TV technician for help.

This device complies with part 15 of the FCC Rules. Operation is subject to the following two conditions: (1) This device may not cause harmful interference, and (2) this device must accept any interference received, including interference that may cause undesired operation.

The device has been evaluated to meet general RF exposure requirement. The device can be used in portable exposure condition without restriction.