intertek
Total Quality. Assured.

Intertek ETL SEMKO Korea Ltd.
Intertek Building, 3, Gongdan-ro
160beon-gil, Gunpo-si, Gyeonggi-do, 15845 Korea
Tel +82 2 567 7474
Fax +82 2 567 8482
intertek.com

TEST REPORT

Report Number	190200116SEL-EMC4
Applicant Name/Address	Haenim CO.,LTD. 15, Saryeom-ro 21beon-gil, Seo-gu, Incheon, Republic of Korea
Test Sample Description	
- Product ..... :	Electric UV Sterilizer, UV Sterilizer & Dryer, UV Sanitizer & Dryer
- Model and/or Brand name ..... :	HN-03+WB-BLE
- Variant model name ..... :	See page 4
- Manufacturer Name / Address . :	Haenim CO.,LTD. 15, Saryeom-ro 21beon-gil, Seo-gu, Incheon, Republic of Korea
- Rating(s) ..... :	AC 120 V, 60 Hz
Receipt of sample(s)	01 Apr. 2019
Date of Test	03 Jul. 2019
Test Method(s)	FCC/OST MP-5 (1986) FCC Part 18
Test Results & Uncertainty	See EMC Results Conclusion
Issue date	13 Aug. 2019

Note 1. The results shown in this test report refer only to the sample(s) tested.

Note 2: This report shall not be reproduced except in full, without the written approval of Intertek.

Note 3: This laboratory is not accredited for the test results marked as *.

Tested by;

Name: Walter Lee
EMC Engineer

Approved by;

Name: Rina Bae
EMC Technical Manager

Intertek ETL SEMKO Korea Ltd.

Except where explicitly agreed in writing, all work and services performed by Intertek is subject to our standard Terms and Conditions which can be obtained at our website: http://www.intertek.com/terms/. Intertek's responsibility and liability are limited to the terms and conditions of the agreement. This report is made solely on the basis of your instructions and / or information and materials supplied by you and provide no warranty on the tested sample(s) be truly representative of the sample source. The report is not intended to be a recommendation for any particular course of action, you are responsible for acting as you see fit on the basis of the report results. Intertek is under no obligation to refer to or report upon any facts or circumstances which are outside the specific instructions received and accepts no responsibility to any parties whatsoever, following the issue of the report, for any matters arising outside the agreed scope of the works. This report does not discharge or release you from your legal obligations and duties to any other person. You are the only one authorized to permit copying or distribution of this report (and then only in its entirety). Any such third parties to whom this report may be circulated rely on the content of the report solely at their own risk. This report shall not be reproduced, except in full.

Copyright © 2017 Intertek

SECTION 1 CONTENTS

SECTION 2 EMC Results Conclusion (with Justification) 3

SECTION 3 Test environment and conditions 3

SECTION 4 EUT Information 4

SECTION 5 TEST CONFIGURATION, Operation mode and SET-UP 5

SECTION 6 EMISSION 6

SECTION 7 Appendix I 14
Photographs of Test Configurations 14

SECTION 8 Appendix II 16
Photographs of EUT 16

SECTION 2 EMC RESULTS CONCLUSION (WITH JUSTIFICATION)

We tested the Electric UV Sterilizer, UV Sterilizer & Dryer, UV Sanitizer & Dryer, Model: HN-03+WB-BLE, to determine if it was in compliance with the relevant US standards as marked on the test report.
We found that the unit met the requirement of FCC Part 18 standards when tested as received.

Test Items	Applied Standards	Results			
		Comply	Not Comply	N/A	See Note
Disturbance Voltage	FCC/OST MP-5 (1986) FCC Part 18	☒	☐	☐	☒
Radiated disturbance (Below 1 GHz)	FCC/OST MP-5 (1986) FCC Part 18	☒	☐	☐	☒
Note 1) When determining the test conclusion, the Measurement Uncertainty of test has been considered.					

Measurement Uncertainty

Conducted Emission	150 kHz – 30 MHz	*U* = 3.3 [dB]
	(Confidence level approximately 95 %, *k* = 2)	
Radiated Emissions	9 kHz – 30 MHz	*U* = 4.5 [dB]
	30 MHz – 1 000 MHz	Horizontal: *U* = 4.3 [dB] Vertical: *U* = 4.6 [dB]
	1 GHz – 6 GHz	Horizontal: *U* = 5.7 [dB] Vertical: *U* = 5.7 [dB]
	6 GHz – 18 GHz	Horizontal: *U* = 5.7 [dB] Vertical: *U* = 5.8 [dB]
	Confidence level approximately 95 %, *k* = 2)	

SECTION 3 TEST ENVIRONMENT AND CONDITIONS

Test Environment

Test Item	Test Site	Test date (MM-DD)	Temp (℃)	Humidity (% R.H.)	Pressure (kPa)
Disturbance Voltage	Shielded Room #2	07-03	23.2 ± 1.0	38.3 ± 1.0	-
Radiated disturbance (Below 1 GHz)	10 m chamber	07-03	23.6 ± 1.0	39.0 ± 1.0	

Copyright © 2017 Intertek

SECTION 4 EUT INFORMATION

Equipment Under Test (EUT):	Electric UV Sterilizer, UV Sterilizer & Dryer, UV Sanitizer & Dryer
Model:	HN-03+WB-BLE
Variant Model:	HN-03+WM-BLE, HN-03+WG-BLE, HN-03+WS-BLE, HN-03+WGN-BLE, HN-03+WP-BLE,HN-03+WBL-BLE, HN-03+WGY-BLE, HN-03+BM-BLE, HN-03+BG-BLE, HN-03+BB-BLE, HN-03+BS-BLE, HN-03+BGN-BLE, HN-03+BP-BLE, HN-03+BBL-BLE, HN-03+BGY-BLE, HN-03+GM-BLE, HN-03+GG-BLE, HN-03+GB-BLE, HN-03+GS-BLE, HN-03+GGN-BLE, HN-03+GP-BLE, HN-03+GBL-BLE, HN-03+GGY-BLE, HN-03+SWM-BLE, HN-03+SWG-BLE, HN-03+SWB-BLE, HN-03+SWS-BLE, HN-03+SWGN-BLE, HN-03+SWP-BLE, HN-03+SWBL-BLE, HN-03+SWGY-BLE
Serial No.:	-
Rated Voltage:	AC 120 V, 60 Hz
Internal clock frequency:	11.0592 MHz
UV lighting operating frequency:	60 kHz
Variant model information:	The basic model and variant models have the same electrical circuit, structure and performance, only the difference in model name according to appearance colors.

HN – 03 + (1) (2) -BLE

(1) : Body Color
W : WHITE, B : BLACK, G : GRAY , SW : SHINY

(2) : Handle Color
M : METAL, G : GOLD , B : BLACK , S :SILVER , GN : GREEN , P : PINK , BL : BLUE , GY : GRAY

SECTION 5 TEST CONFIGURATION, OPERATION MODE AND SET-UP

Equipment	Model No.	Serial No.	Manufacturer	Connect type	CABLE Length (m)	Shield
Electric UV Sterilizer, UV Sterilizer & Dryer, UV Sanitizer & Dryer	HN-03+WB-BLE	-	Haenim CO.,LTD.	AC IN	1.7	Unshielded
Smart Phone	-	-	Samsung Electronics Co., Ltd.	-	-	-
UV Lamp	HNS 4W G5	-	OSRAM	-	-	-

Test Operation Mode

- Bluetooth Mode : It was controlling UV lamp by connecting smartphone with Bluetooth.

Test Setup

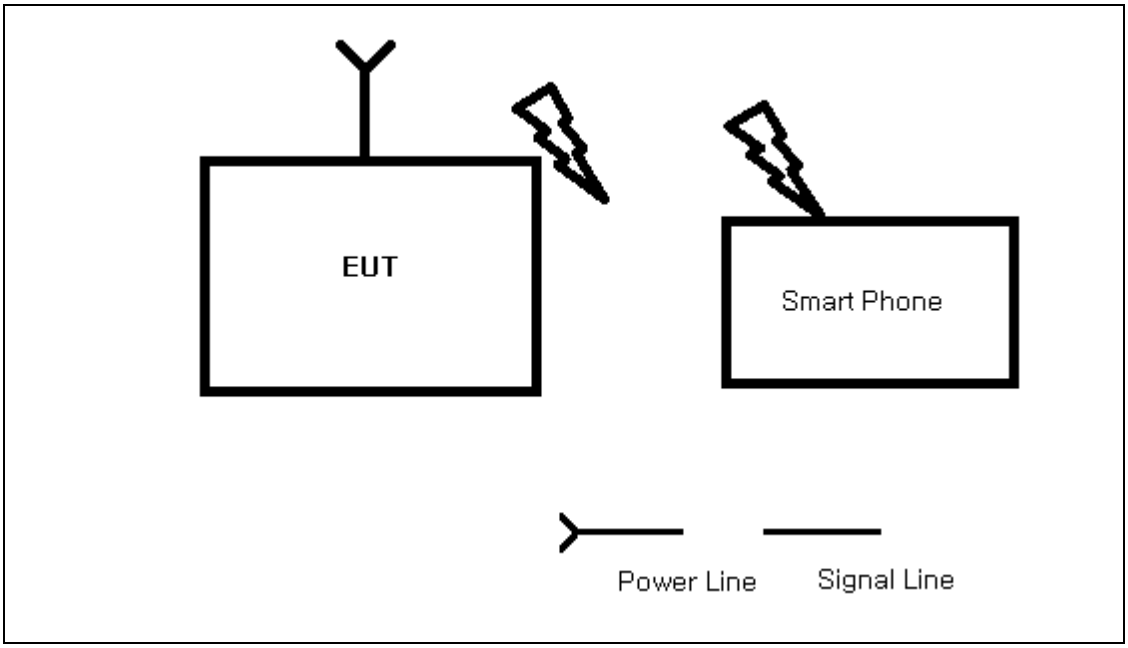

SECTION 6 EMISSION

Radiated disturbance test

Test Method and Summary

Test standard: FCC/OST MP-5 (1986), FCC Part 18

Used Test Equipment

Control No.	Equipment	Manufacturer	Model No.	Serial No.	Next Cal.	Cal Int.
EMC001	EMI Test Receiver	R & S	ESU40	100478	2020.01.03	1Y
EMC025	Biconilog (Type7)	ETS-Lindgren	3142E	00203547	2021.02.25	2Y
EMC077	AMP	R & S	SCU-18D	1952128	2020.06.28	1Y

Operating Environment

Test Voltage: AC 120 V, 60 Hz

Test Setup and Procedure

The EUT along with its peripherals were placed on a non-conducted table with a height of 0.8 m in height table above the reference ground plane.
Rotate the EUT from (0 ~ 360)° and position the receiving antenna at heights from (1 ~ 4) m above the reference ground plane continuously to determine associated with higher emission levels and record them.
The measurement was made in both the vertical and horizontal polarization, and the maximum value is presented in the report.
For measurements above 1 GHz,
Place the measurement antenna away from each area of the EUT determined to be a source of emissions at the specified measurement distance, while keeping the measurement antenna aimed at the source of emissions at each frequency of significant emissions, with polarization oriented for maximum response.
The measurement antenna may have to be higher or lower than the EUT, depending on the radiation pattern of the emission and staying aimed at the emission source for receiving the maximum signal.
The final measurement antenna elevation shall be that which maximizes the emissions.

Copyright © 2017 Intertek

Limits

- The test frequency range of Radiated Disturbance measurements are listed below.

Frequency band in which device operates (MHz)	Upper frequency of measurement range(MHz) Lowest frequency	Highest frequency
Below 1.705	Lowest frequency generated in the device, but not lower than 9 kHz	30 MHz.
1.705 to 30	Lowest frequency generated in the device, but not lower than 9 kHz	400 MHz.
30 to 500	Lowest frequency generated in the device or 25 MHz, whichever is lower	Tenth harmonic or 1,000 MHz, whichever is higher.
500 to 1,000	Lowest frequency generated in the device or 100 MHz, whichever is lower	Tenth harmonic.
Above 1,000	.....do	Tenth harmonic or highest detectable emission.

(a) ISM equipment operating on a frequency specified in 18.301 is permitted unlimited radiated energy in the band specified for that frequency :

ISM frequency	Tolerance
6.78 MHz	±15.0 kHz
13.56 MHz	±7.0 kHz
27.12 MHz	±163.0 kHz
40.68 MHz	±20.0 kHz
915 MHz	±13.0 MHz
2,450 MHz	±50.0 MHz
5,800 MHz	±75.0 MHz
24,125 MHz	±125.0 MHz
61.25 GHz	±250.0 MHz
122.50 GHz	±500.0 MHz
245.00 GHz	±1.0 GHz

Copyright © 2017 Intertek

(b) The field strength level of emissions which lie outside the bands specified in 18.301 unless otherwise indicated, shall not exceed the following :

Equipment	Operating frequency	RF Power generated by equipment (W)	Field strength limit (µV/m)	Distance (meters)
Any type unless otherwise specified (miscellaneous)	Any ISM frequency	Below 500 500 or more	25 25×SQRT(power/500)	300 [1] 300
	Any non-ISM frequency	Below 500 500 or more	15 15×SQRT(power/500)	300 [1] 300
Industrial heaters and RF stabilized arc welders	On or below 5,725 MHz Above 5,725 MHz	Any Any	10 (2)	1 600 (2)
Medical diathermy	Any ISM frequency Any non-ISM frequency	Any Any	25 15	300 300
Ultrasonic	Below 490 kHz	Below 500 500 or more	2,400/F(kHz) 2,400/F(kHz)×SQRT(power/500)	300 [3] 300
	490 to 1,600 kHz	Any	24,000/F(kHz)	30
	Above 1,600 kHz	Any	15	30
Induction cooking ranges	Below 90 kHz On or above 90 kHz	Any Any	1,500 300	[4] 30 [4] 30

1. Field strength may not exceed 10 µV/m at 1 600 meters. Consumer equipment operating below 1 000 MHz is not permitted the increase in field strength otherwise permitted here for power over 500 W.
2. Reduced to the greatest extent possible.
3. Field strength may not exceed 10 µV/m at 1 600 meters. Consumer equipment is not permitted the increase in field strength otherwise permitted here for over 500 W.
4. Induction cooking ranges manufactured prior to February 1, 1 980, shall be subject to the field strength limits for miscellaneous ISM equipment.

(c) The field strength limits for RF lighting devices shall be the following:

Frequency (MHz)	Field strength limit at 30 meters (µV/m)
Non-consumer equipment:	
30 - 88	30
88 - 216	50
216 – 1000	70
Consumer equipment:	
30 - 88	10
88 - 216	15
216 – 1000	20

1. The tighter limit shall apply at the boundary between two frequency ranges.
2. Testing for compliance with these limits may be made at closer distances, provided a sufficient number of measurements are taken to plot the radiation pattern, to determine the major lobes of radiation, and to determine the expected field strength level at 30, 300, or 1 600 meters. Alternatively, if measurements are made at only one closer fixed distance, then the permissible field strength limits shall be adjusted using 1/d as an attenuation factor.

Test Data

[Below 1 GHz]

[Bluetooth Mode]

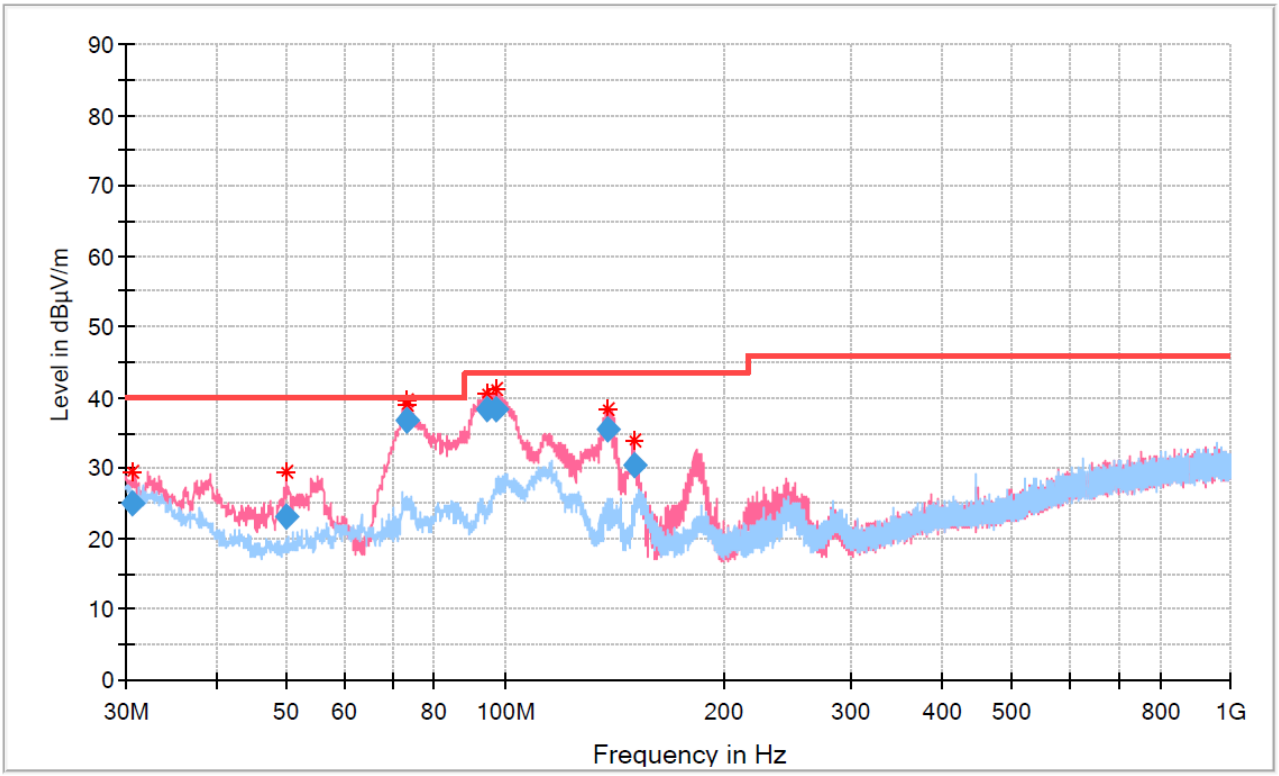

Final_Result

Frequency (MHz)	QuasiPeak (dBµV/m)	Limit (dBµV/m)	Margin (dB)	Height (cm)	Pol	Azimuth (deg)	Corr. (dB)
30.59	24.96	40.00	15.04	100.0	V	289.00	-13.33
49.85	23.08	40.00	16.92	100.0	V	328.00	-21.45
73.13	36.67	40.00	3.33	100.0	V	268.00	-21.39
73.19	36.79	40.00	3.21	100.0	V	224.00	-21.39
94.20	38.48	43.52	5.04	100.0	V	95.00	-20.37
97.50	38.42	43.52	5.10	100.0	V	41.00	-19.97
138.79	35.59	43.52	7.93	100.0	V	77.00	-20.17
150.34	30.49	43.52	13.03	100.0	V	32.00	-19.14

Sample calculation (example : at 80 MHz)

- Limit = 30 dBµV/m at 10 m
- Level (20 dBµV/m)
  = Meter Reading (40 dBµV) + Factor (- 20 dB (1/m) = antenna factor + cable loss – amplifier gain)
- Margin (10 dB) = Limit (30 dBµV/m) - Level (20 dBµV/m) = 10 dB below limit

Disturbance Voltage Test

Test Method and Summary

Test standard : FCC/OST MP-5 (1986), FCC Part 18

Used Test Equipment

Control No.	Equipment	Manufacturer	Model No.	Serial No.	Next Cal.	Cal Int.
EMC004	EMI Test Receiver	R & S	ESR7	101560	2020.01.02	1Y
EMC007	Two-Line V-Network	R & S	ENV216	101982	2019.10.31	1Y

Operating Environment

Test Voltage: AC 120 V, 60 Hz

Test Setup and Procedure

Disturbance Voltage Test at Mains Terminal:

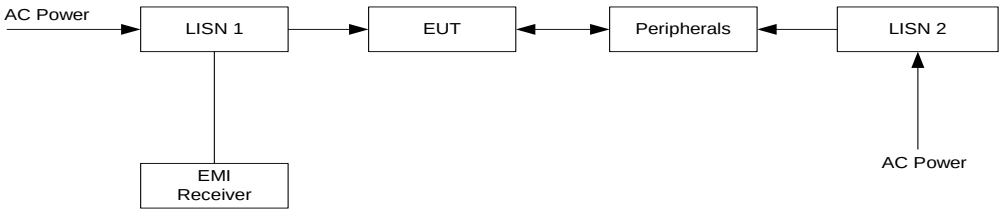

The EUT along with its peripherals were placed on a 0.8 m in height wooden table and the EUT was adjusted to maintain a 0.4 m space from a vertical reference plane. The EUT was connected to power mains through a line impedance stabilization network (LISN), which provided 50 characteristic coupling impedance for measuring instrument and the chassis ground was bounded to the horizontal ground plane of shielded room. The excess power cable between the EUT and the LISN was bundled.

Limits

(a) All Induction cooking ranges and ultrasonic equipment:

Frequency (MHz)	Conducted limit (dBµV)	
	Quasi-peak	Average
0.009 – 0.05	110	-
0.05 – 0.15	90 – 80	-
0.15 – 0.5	66 – 56	56 – 46
0.5 – 5	56	46
5 – 30	60	50

(b) All other part 18 consumer devices:

Frequency (MHz)	Conducted limit (dBµV)	
	Quasi-peak	Average
0.15 – 0.5	66 – 56	56 – 46 *
0.5 – 5	56	46
5 – 30	60	50

(c) RF lighting devices:

Frequency (MHz)	Maximum RF line voltage measured with a 50 uH/50 ohm LISN (µV)
Non-consumer equipment	
0.45 – 1.6	1 000
1.6 – 30	3 000
Consumer equipment	
0.45 – 2.51	250
2.51 – 3.0	3 000
3.0 – 30	250

Test Data

[Bluetooth Mode_Live]

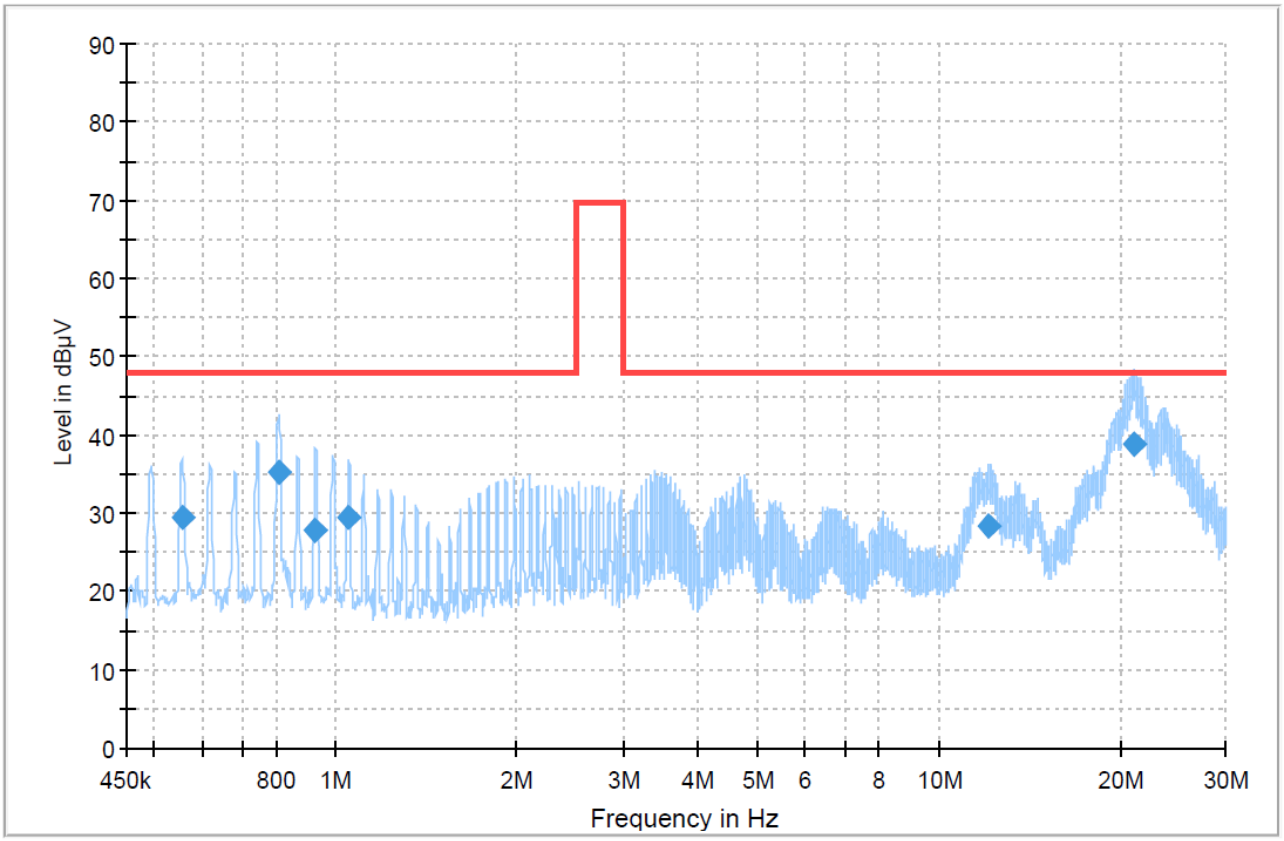

Final_Result

Frequency (MHz)	QuasiPeak (dBµV)	Limit (dBµV)	Margin (dB)	Bandwidth (kHz)	Line	Filter	Corr. (dB)
0.556380	29.37	47.96	18.59	9.000	L1	ON	10.0
0.803615	35.30	47.96	12.66	9.000	L1	ON	9.8
0.926740	27.91	47.96	20.05	9.000	L1	ON	9.8
1.050850	29.38	47.96	18.58	9.000	L1	ON	9.9
12.073000	28.34	47.96	19.62	9.000	L1	ON	9.9
21.109390	38.92	47.96	9.04	9.000	L1	ON	10.0

Copyright © 2017 Intertek

[Bluetooth Mode_Neutral]

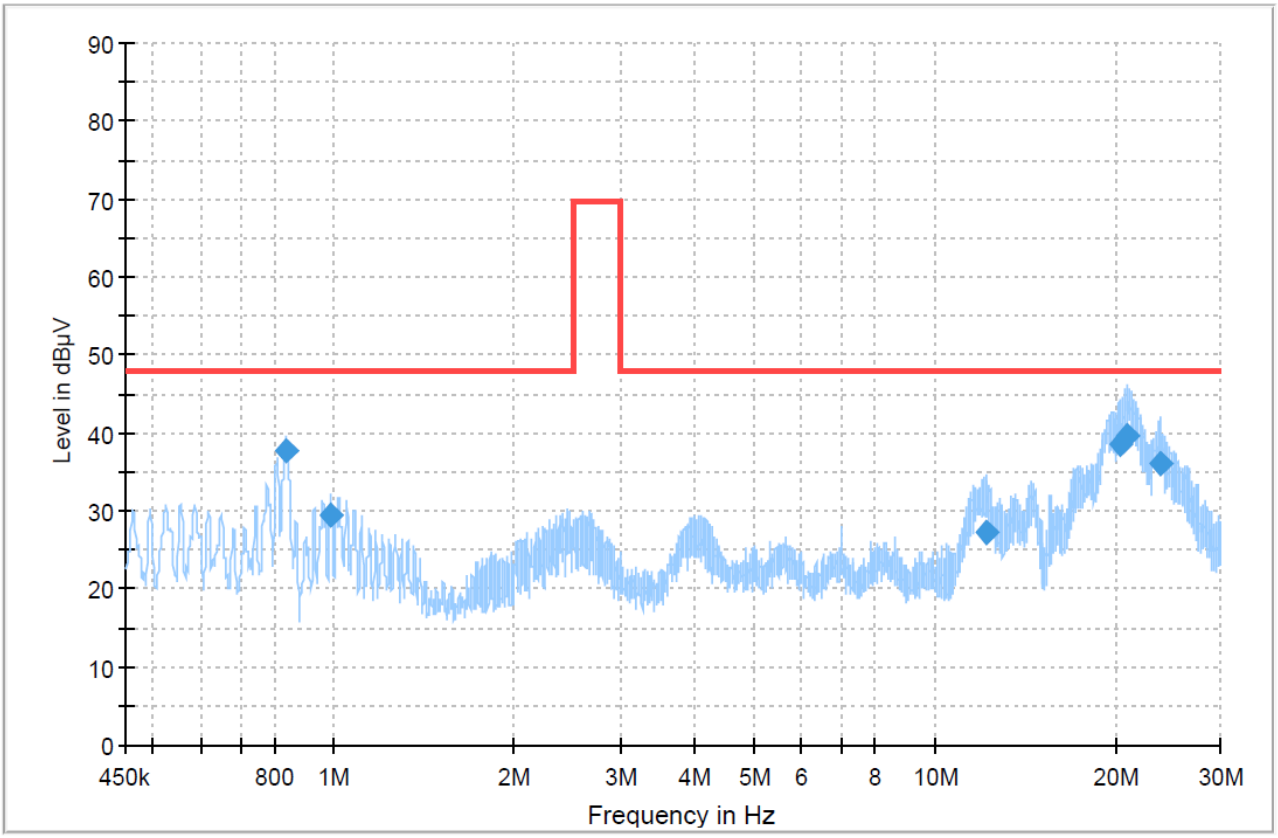

Final_Result

Frequency (MHz)	QuasiPeak (dBµV)	Limit (dBµV)	Margin (dB)	Bandwidth (kHz)	Line	Filter	Corr. (dB)
0.833165	37.58	47.96	10.38	9.000	N	ON	9.9
0.987810	29.57	47.96	18.39	9.000	N	ON	9.9
12.212870	27.14	47.96	20.82	9.000	N	ON	9.9
20.431710	38.49	47.96	9.47	9.000	N	ON	10.1
20.974445	39.58	47.96	8.38	9.000	N	ON	10.1
23.727520	35.99	47.96	11.97	9.000	N	ON	10.1

Sample calculation (example : at 10 MHz)

- Limit = 60 dBµV (Quasi-peak limit)
- Level (50 dBµV) = Meter Reading (40.2 dBµV) + Factor (9.9 dB = AMN factor 9.8 dB + Cable loss 0.1 dB)
- Margin (10 dB) = Limit (60 dBµV) - Level (50 dBµV) = 10 dB below limit

SECTION 7 APPENDIX I

Photographs of Test Configurations

Disturbance Voltage Test

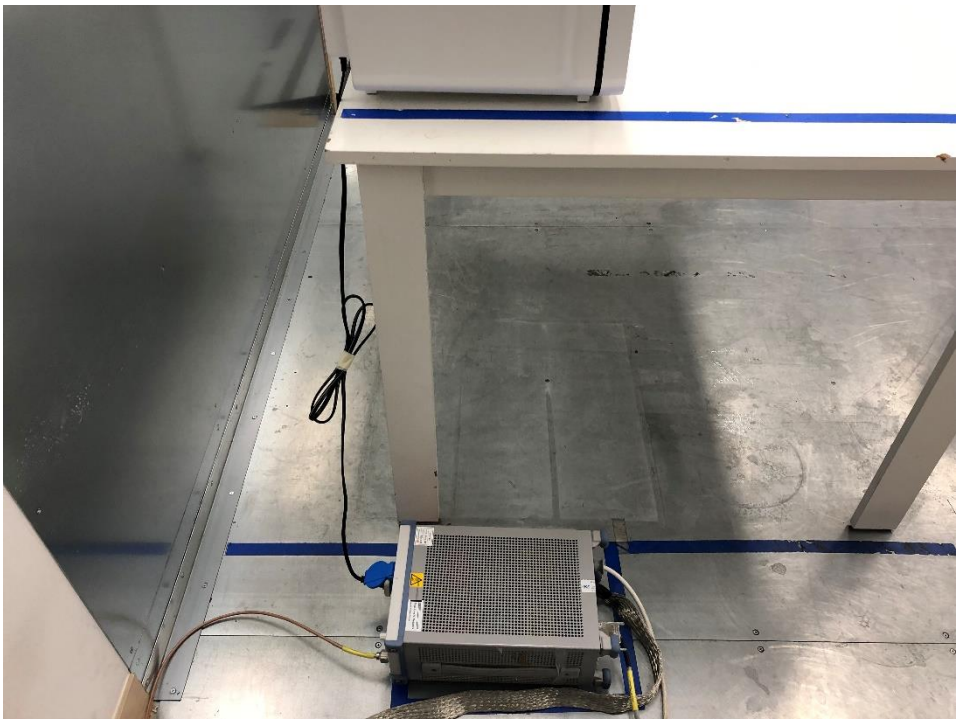

Disturbance Voltage Test

Radiated disturbance (Below 1GHz)

Radiated disturbance (Below 1GHz)

SECTION 8 APPENDIX II

Photographs of EUT

Front

Rear