DRF1262T
22dBm LoRa Long Range RF Front-end Module V1.01

Features:

- Frequency Range: 915MHz
- Modulation: FSK/GFSK/MSK/LoRa
- SPI Data Interface
- Sensitivity: -147dBm
- Max.Output Power: +22dBm
- Data Rate: <300 kbps
- 127dB dynamic Range RSSI
- Excellent blocking immunity
- Preamble detection
- Automatic RF sense and CAD monitor
- Built-in bit synchronizer for clock recovery
- Packet engine up to 256 bytes with CRC
- Working Temperature: -40°C ~+85°C
- Build-in temperature sensor
- Standby current: ≤ 1uA
- Supply voltage: 1.8~3.6V

Applications

- Remote Control
- Smart metering
- Home Automation
- Personal data logger
- Wireless sensor network
- Remote keyless entry
- Wireless PC peripherals

DESCRIPTION

DRF1262T is a type of 915MHz RF front-end transceiver module based on SX1262 from Semtech Corporation. It keeps the advantages of RFIC SX1262 but simplifies the circuit design. The high sensitivity (-147dBm) in LoRa modulation and Max. 22dBm power output make the module suitable for low range and low data rate applications.

DRF1262T module consists of RFIC SX1262, TCXO and antenna matching circuit. The antenna

port is well matched to standard 50 Ohm impedance. Users don't need to spend time in RF circuit design and just choose suitable antennas for different applications. DRF1262T operates at 1.8~3.3V with extra low standby current which makes it suitable for battery powered-up applications. DRF1262T adopts ±1ppm high accuracy TCXO which makes it possible to use narrower bandwidth to achieve the high sensitivity up to -147dBm. DORJI also provides DRF1268T for 433MHz TCXO version of sx1268 module. Users can use the testing kit DAD06 to test the basic function on ST Nucleo-L053R8 or Arduino UNO board.

PIN FUNCTIONS

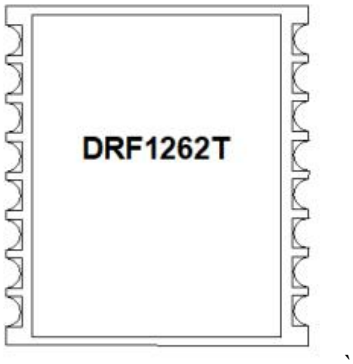

Figure 1: DRF1262T Pin Layout

PIN	Name	Function	Description
1	ANT	ANT	50 Ohm Impedance port
2	GND	Ground	Ground (0V)
3	SW	Input	One control pin of RF switch
4	GND	Ground	Ground (0V)
5	GND	Ground	Ground (0V)
6	GND/NC	TCXO pin	Can be Ground (0V) or NC
7	GND	Ground	Ground (0V)
8	VDD	Power	Normal 3.3V
9	DIO2	Output	It is connected to one control pin of RF switch internally
10	DIO1	Input/Output	Multipurpose digital IO
11	BUSY	Input/Output	Busy indicator
12	RST	Input/Output	Reset signal, active low
13	MISO	Output	SPI slave output
14	MOSI	Input	SPI slave input
15	SCK	Intput	SPI clock
16	NSS	Input	SPI Slave Select

Table 1: DRF1262T Pin Functions

ELECTRICAL SPECIFICATIONS

Symbol	Parameter (condition)	Min.	Typ.	Max.	Units
VCC	Supply Voltage	1.8	3.3	3.6	V
Temp	Operating temperature range	-40	25	85	°C
Freq	Frequency range @ 868MHz	862	868	878	MHz
	Frequency range @ 915MHz	900	915	928	MHz
I_{DD_R}	Current in receive mode		5.8		mA
I_{DD_T}	Current in transmit mode		132		mA
I_{DD_S}	Current in sleep mode.			1	uA
Pout	Max. output power @868Mhz		20.8		dBm
	Max. output power @915Mhz		20.5		dBm
Sen	Receiver sensitivity @868MHz			-147	dBm
	Receiver sensitivity @915MHz			-147	dBm
Z_{ANT}	Antenna Impedance		50		Ohm

Table 2: DRF1262T Electrical Specifications

ABSOLUTE MAXIMUM RATINGS

Symbol	Parameter	Min.	Max.	Units
VCC	Supply Voltage	-0.3	3.6	V
VI	Input voltage	-0.3	VCC+0.3	V
VO	Output voltage	-0.3	VCC+0.3	V
T_{ST}	Storage temperature	-40	125	°C

Table 3: DRF1262T Maximum Ratings

MODULE SCHEMATIC

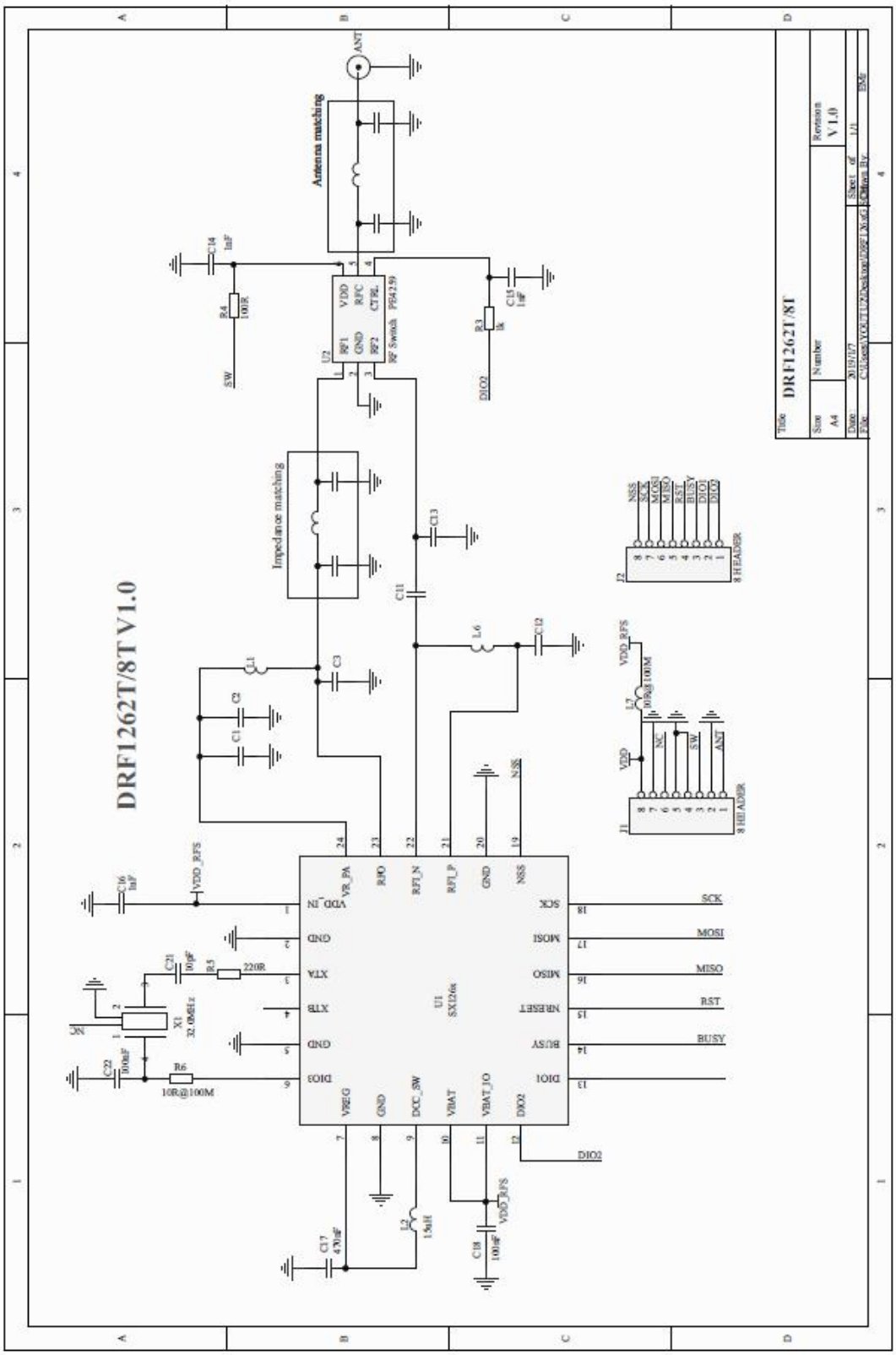

Figure 2: DRF1262T Schematic

MECHANICAL DATA

Unit: mm

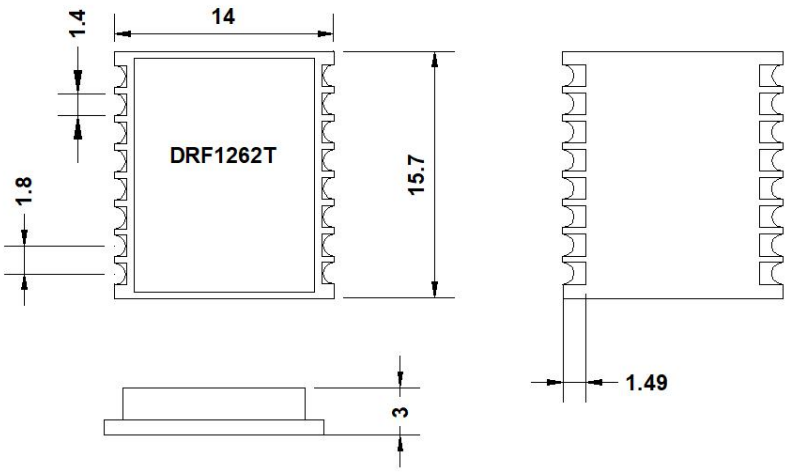

Figure 3: Mechanical Dimension

REFERENCE DOCUMENTS

1. SX1262 Datasheet
2. LoRa Calculator
3. LoRa Low Energy Design Guide
4. LoRa Modem Designer's Guide
5. SX1262 Development Kit User Guide

Dorji Applied Technologies A division of ***Dorji Industrial Group Co., Ltd*** Add.: Xinchenhuayuan 2, Dalangnanlu, Longhua, Baoan district, Shenzhen, China 518109 Tel: 0086-755-28156122 Fax.: 0086-755-28156133 Email: dorji@dorji.com Web: http://www.dorji.com	Dorji Industrial Group Co., Ltd reserves the right to make corrections, modifications, improvements and other changes to its products and services at any time and to discontinue any product or service without notice. Customers are expected to visit websites for getting newest product information before placing orders. These products are not designed for use in life support appliances, devices or other products where malfunction of these products might result in personal injury. Customers using these products in such applications do so at their own risk and agree to fully indemnify Dorji Industrial Group for any damages resulting from improper use.

DRF126xT reference design

1. The connection between module(DRF126xT) and antenna SMA head antenna requires 50 OHN impedance line. Refer to the following figure for routing mode.

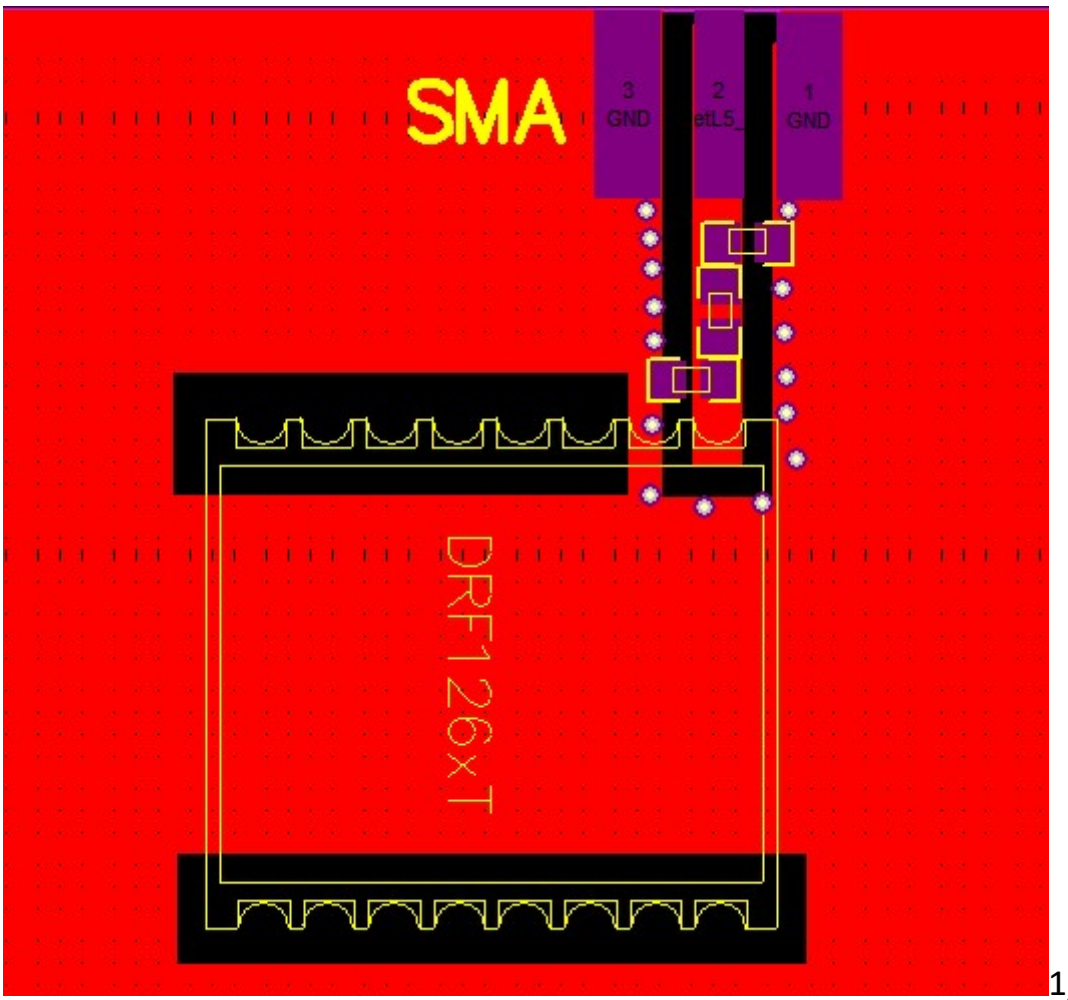

1,

2. The connection between module(DRF126xT) and antenna SMA-90 head antenna requires 50 OHN impedance line. Refer to the following figure for routing mode.

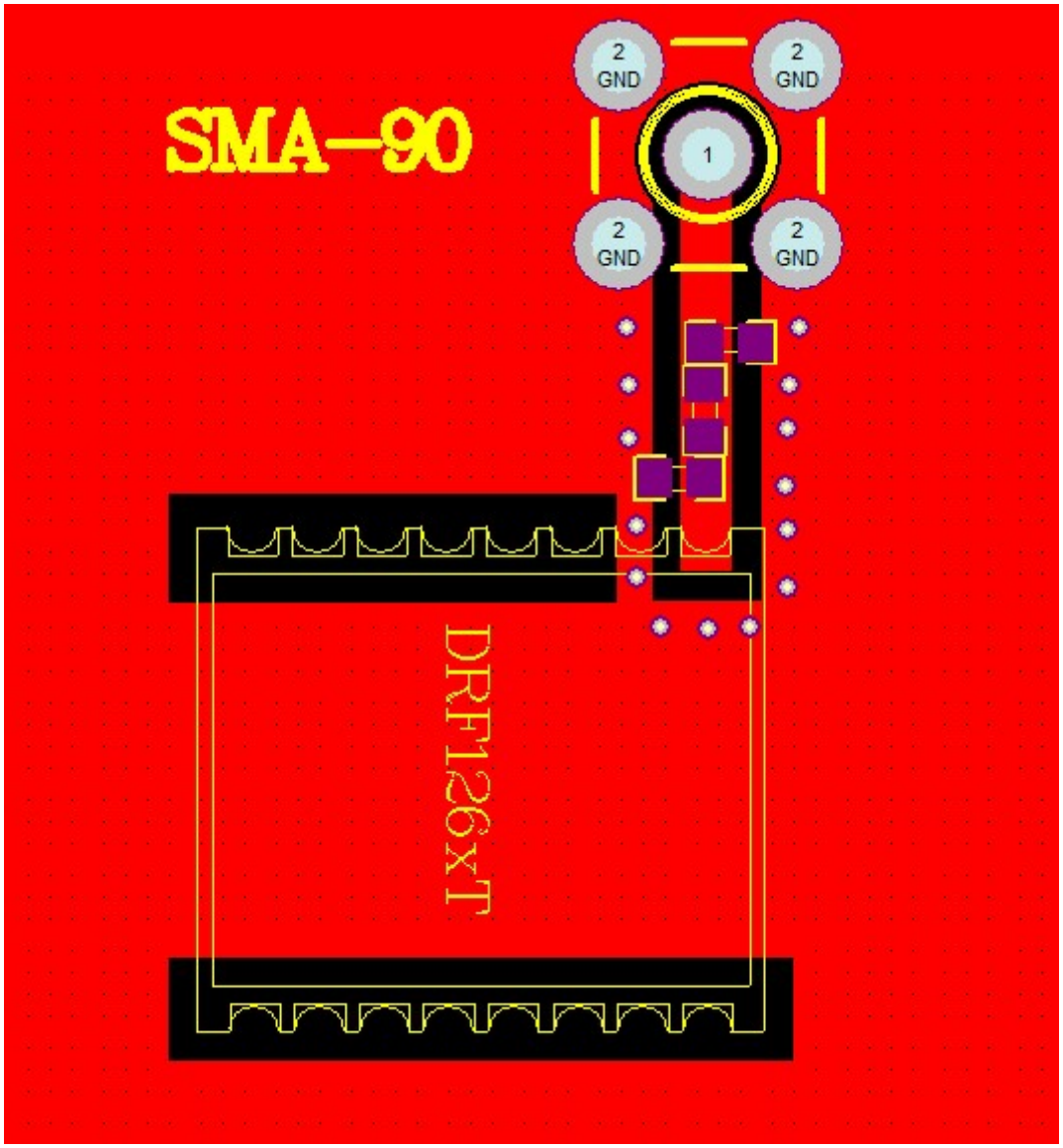

3. The connection between module(DRF126xT) and antenna SMA head antenna requires 50 OHN impedance line. Refer to the following figure for routing mode.

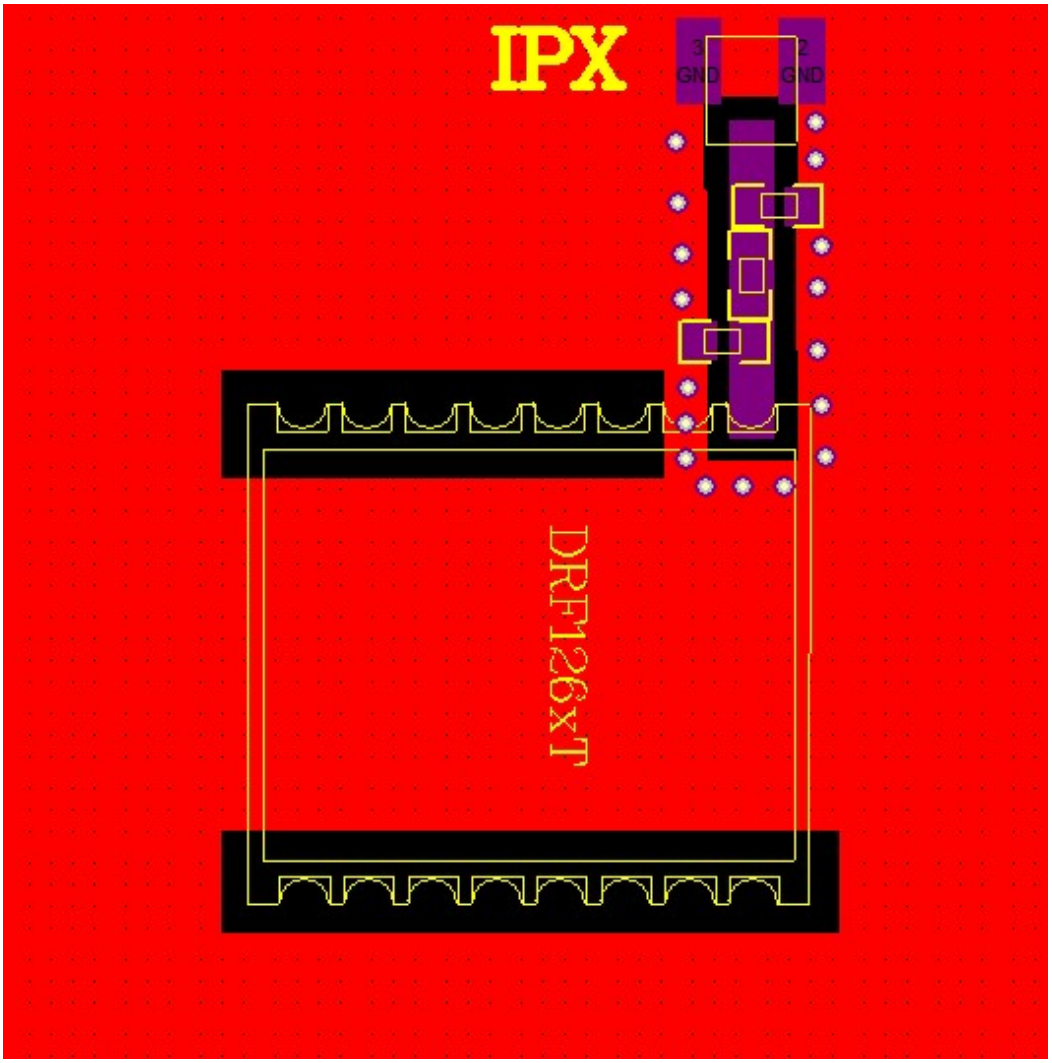

The module(DRF126xT) recommended reflux curve refers to IPC/JEDEC standard. The maximum temperature is less than 250 degrees Celsius and is not more than 2 times.

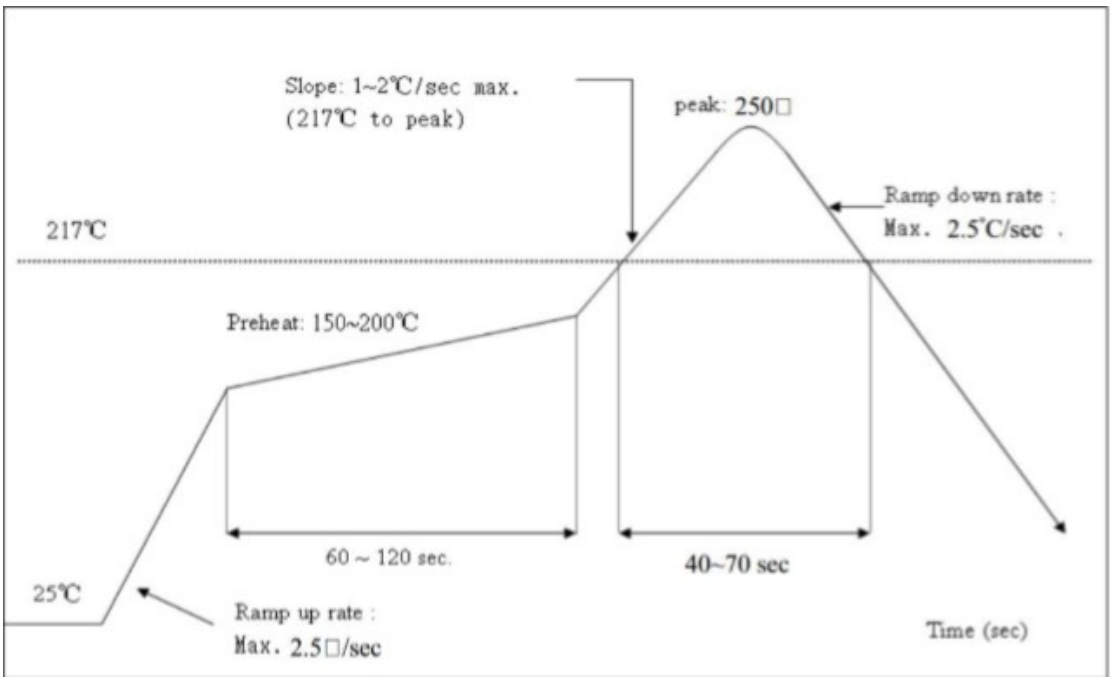

FCC Statement:

This device complies with part 15 of the FCC Rules. Operation is subject to the following two conditions: (1) This device may not cause harmful interference, and (2) this device must accept any interference received, including interference that may cause undesired operation.

Any Changes or modifications not expressly approved by the party responsible for compliance could void the user's authority to operate the equipment.

Note: This equipment has been tested and found to comply with the limits for a Class B digital device, pursuant to part 15 of the FCC Rules. These limits are designed to provide reasonable protection against harmful interference in a residential installation. This equipment generates, uses and can radiate radio frequency energy and, if not installed and used in accordance with the instructions, may cause harmful interference to radio communications. However, there is no guarantee that interference will not occur in a particular installation. If this equipment does cause harmful interference to radio or television reception, which can be determined by turning the equipment off and on, the user is encouraged to try to correct the interference by one or more of the following measures:

—Reorient or relocate the receiving antenna.

—Increase the separation between the equipment and receiver.

—Connect the equipment into an outlet on a circuit different from that to which the receiver is connected.

—Consult the dealer or an experienced radio/TV technician for help.

FCC Radiation Exposure Statement

This modular complies with FCC RF radiation exposure limits set forth for an uncontrolled environment. This transmitter must not be co-located or operating in conjunction with any other antenna or transmitter.

This modular must be installed and operated with a minimum distance of 20 cm between the radiator and user body.

Important Notice to OEM integrators:

If the FCC identification number is not visible when the module is installed inside another device, then the outside of the device into which the module is installed must also display a label referring to the enclosed module. This exterior label can use wording such as the following: “Contains Transmitter Module FCC ID: 2AS5Y-62T Or Contains FCC ID: 2AS5Y-62T”

When the module is installed inside another device, the user manual of the host must contain below warning statements;

1. This device complies with Part 15 of the FCC Rules. Operation is subject to the following two conditions:

(1) This device may not cause harmful interference.

(2) This device must accept any interference received, including interference that may cause undesired operation.

Note: This equipment has been tested and found to comply with the limits for a Class B digital device, pursuant to part 15 of the FCC Rules. These limits are designed to provide reasonable protection against harmful interference in a residential installation. This equipment generates, uses and can radiate radio frequency energy and, if not installed and used in accordance with the instructions, may cause harmful interference to radio communications.

However, there is no guarantee that interference will not occur in a particular installation. If this equipment does cause harmful interference to radio or television reception, which can be determined by turning the equipment off

and on, the user is encouraged to try to correct the interference by one or more of the following measures:

—Reorient or relocate the receiving antenna.

—Increase the separation between the equipment and receiver.

—Connect the equipment into an outlet on a circuit different from that to which the receiver is connected.

—Consult the dealer or an experienced radio/TV technician for help.

2. Changes or modifications not expressly approved by the party responsible for compliance could void the user's authority to operate the equipment.

The devices must be installed and used in strict accordance with the manufacturer's instructions as described in the user

documentation that comes with the product.

Any company of the host device which install this modular with limit modular approval should perform the test of radiated & conducted emission and spurious emission,etc. according to FCC part 15C : 15.249 and 15.209 & 15.207 ,15B Class B requirement, Only if the test result comply with FCC part 15C : 15.249 and 15.209 & 15.207 ,15B Class B requirement， then the host can be sold legally.

IC STATEMENT

This device contains licence-exempt transmitter(s)/receiver(s) that comply with Innovation, Science and Economic Development Canada’s licence-exempt RSS(s). Operation is subject to the following two conditions:

(1) This device may not cause interference.

(2) This device must accept any interference, including interference that may cause undesired operation of the device

Cet appareil contient des émetteurs / récepteurs exemptés de licence conformes aux RSS (RSS) d'Innovation, Sciences

et Développement économique Canada. Le fonctionnement est soumis aux deux conditions suivantes :

(1) Cet appareil ne doit pas causer d'interférences.

(2) Cet appareil doit accepter toutes les interférences, y compris celles susceptibles de provoquer un fonctionnement

indésirable de l'appareil.

IC Radiation Exposure Statement

This modular complies with IC RF radiation exposure limits set forth for an uncontrolled environment. This transmitter

must not be co-located or operating in conjunction with any other antenna or transmitter.

If the IC number is not visible when the module is installed inside another device, then the outside of the device into

which the module is installed must also display a label referring to the enclosed module. This exterior label can use wording such as the following: “Contains IC: 24995-62T”

when the module is installed inside another device, the user manual of this device must contain below warning statements;

1. This device contains licence-exempt transmitter(s)/receiver(s) that comply with Innovation, Science and Economic

Development Canada’s licence-exempt RSS(s). Operation is subject to the following two conditions:

(1) This device may not cause interference.

(2) This device must accept any interference, including interference that may cause undesired operation of the device.

2. Cet appareil contient des émetteurs / récepteurs exemptés de licence conformes aux RSS (RSS) d'Innovation, Sciences et Développement économique Canada. Le fonctionnement est soumis aux deux conditions suivantes :

(1) Cet appareil ne doit pas causer d'interférences.

(2) Cet appareil doit accepter toutes les interférences, y compris celles susceptibles de provoquer un fonctionnement
indésirable de l'appareil.

The devices must be installed and used in strict accordance with the manufacturer's instructions as described in the user
documentation that comes with the product.

915MHz Antenna
technical indicators

Mode:TLB-915-JW-2.5N (SW915-WT36)

Electrical Data

Frequency Range(MHz):902~928

V.S.W.R :<=2.0

Input Impedance(Ω) :50

Max-power(W) :10

Gain(dBi):2.15

Polarization :Vertical

Weight(g):10

Height(mm):48

Cable Length(CM):no

Color: Black

Connector Type :SMA/JW

Description:

TLB-915-JW-2.5N is designed for 915MHz frequency band communication system. It has the advantages of low VSWR, smart size and easy installment. Each antenna is strictly tested before shipment in the factory.

Antenna standing wave ratio diagram:

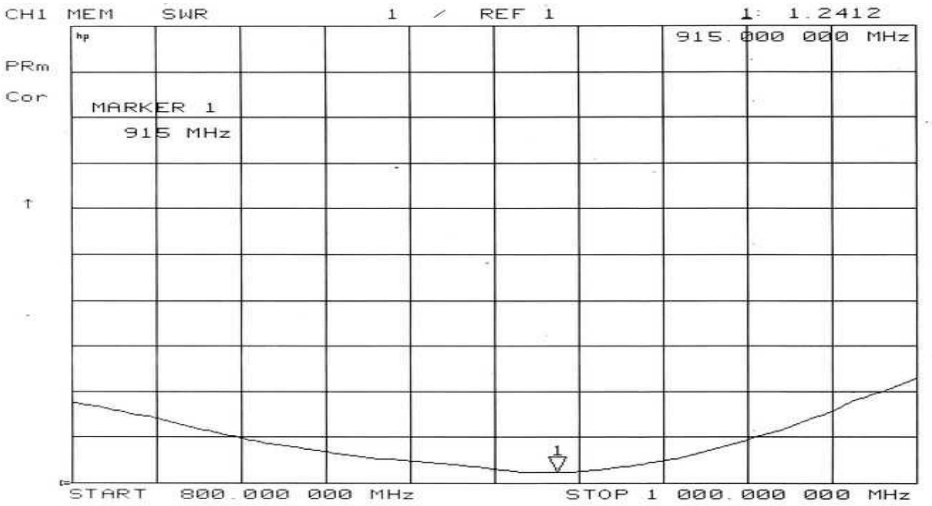
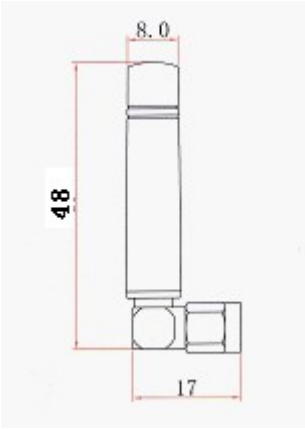
Antenna size chart: