ROLLINGSQUARE®

HYPHEN®

User manual

Components

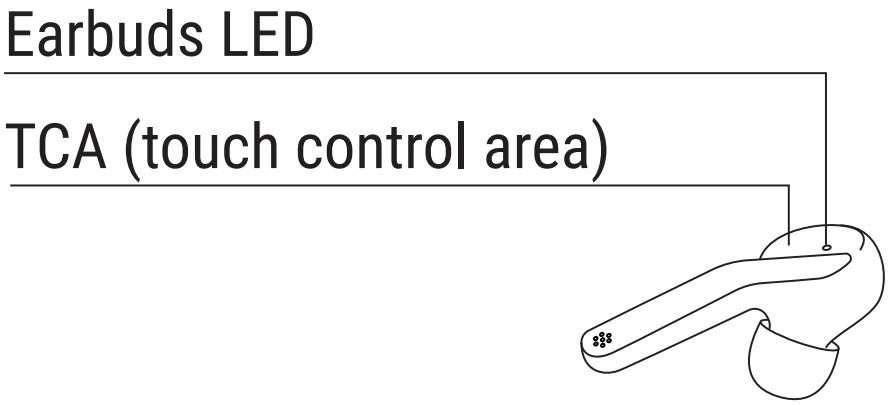

HYPHEN

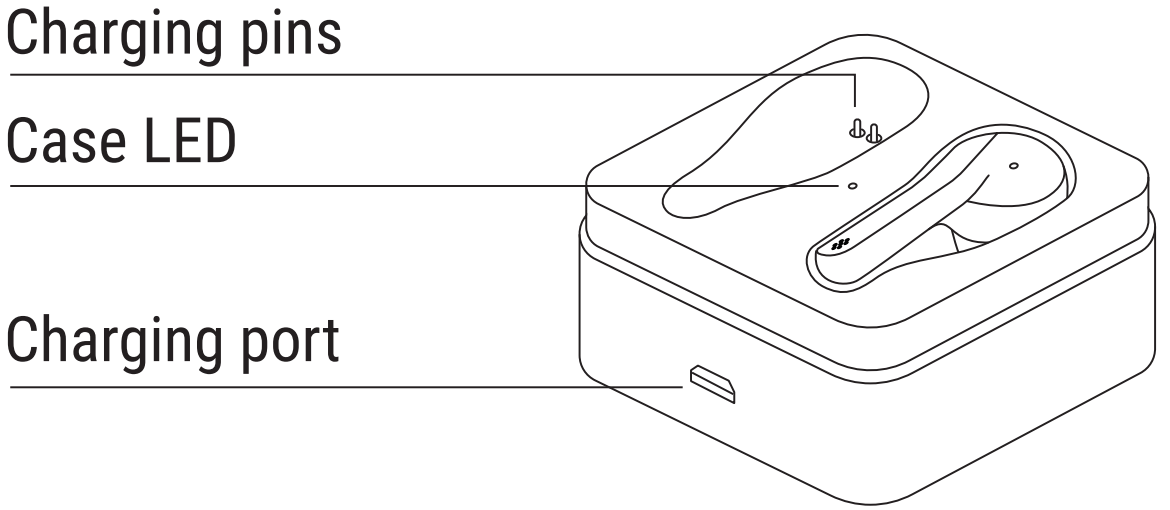

HYPHEN Case

Turn ON and OFF

Automatic turn **ON**

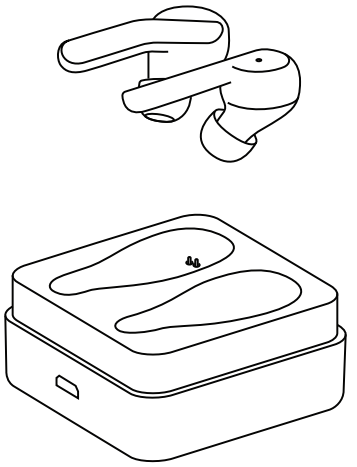

Automatic turn **OFF**

Manual turn **ON**

2 sec

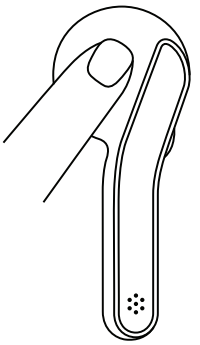

Manual turn **OFF**

5 sec

Pair

1

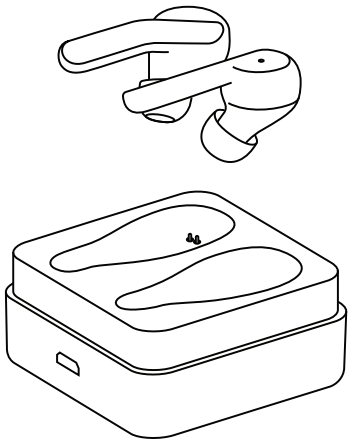

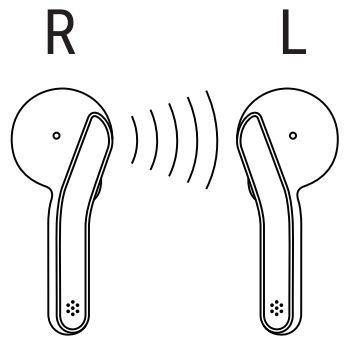

R connects to L (automatic)

2

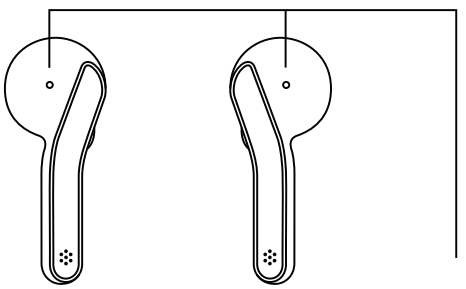

Left LED blinking white

L / R are in phone pairing mode

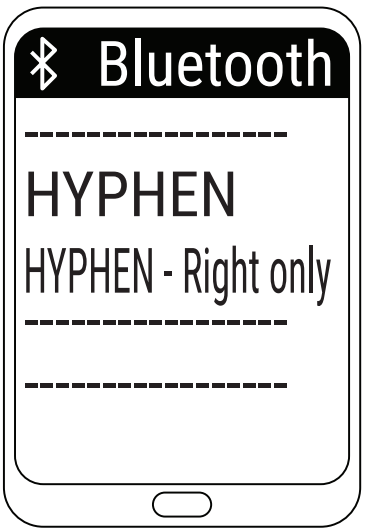

Select HYPHEN on your device's Bluetooth menu to pair both.

- If HYPHEN don’t automatically pair with each other nor with the device put them back in the case and start over.

Reset

1. Turn OFF the Bluetooth on your device.

2. Pick up the Left earbud to automatically turn it ON, then wait 1 minute. Hold on the TCA for 5 seconds to turn it OFF.

3. Pick up the Right earbud to automatically turn it ON. Hold on the TCA for 5 seconds to turn it OFF. You don’t need to wait 1 minute for this step.

4. When both earbuds are OFF, turn them ON at the same time, by holding on the TCA for 2 seconds: the earbuds will connect to each other. Turn on Bluetooth on your device and pair the earbuds.

Pair, single earbud mode

To be connected	Action	on Bluetooth menu
R	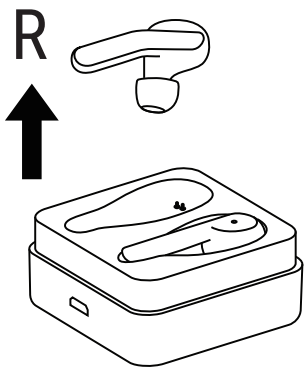	select HYPHEN - Right only
L	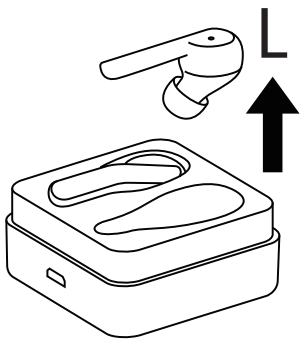	select HYPHEN

Pair, after one earbud is already paired

Already connected	To be connected	Action	
R	L	1 R 2 L	HYPHEN
L	R	1 L 2 R	HYPHEN - Right only

Already connected	To be connected	Action	
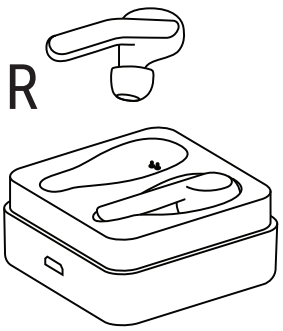	L + R	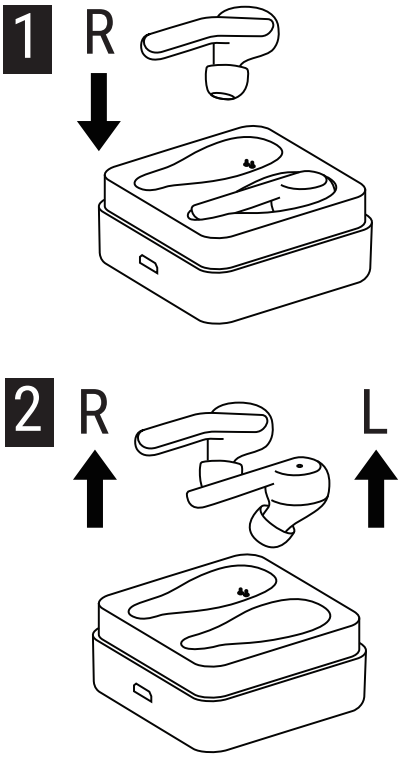	HYPHEN
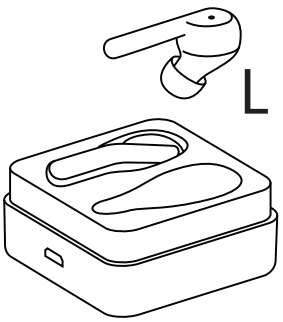	L + R	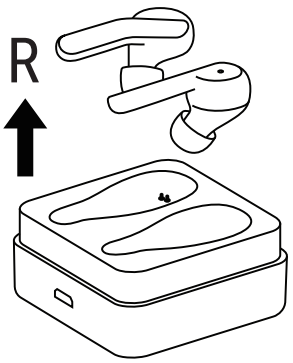	HYPHEN

Advanced Touch Control

Function	Tap on TCA n. times
▶ ❚❚	●
▶▶❚	● ● R earbud
❚◀◀	● ● L earbud
voice assistant	● ● ●
🔊+	2 sec R earbud*
🔊-	2 sec L earbud*
📞	●
reject call	2 sec
☎	●
ON	2 sec
OFF	5 sec

*Only while audio is playing.

Charging HYPHEN

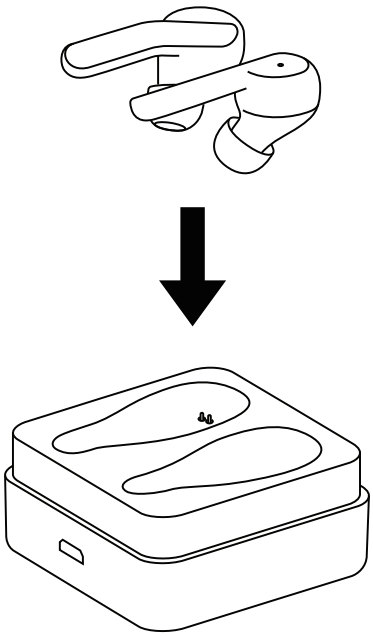

Simply put the earbuds back in the case to charge. They will snap magnetically. The LED on the earbuds will be orange while charging and OFF when the earbuds are fully charged.

Charging HYPHEN Case

- **via cable**

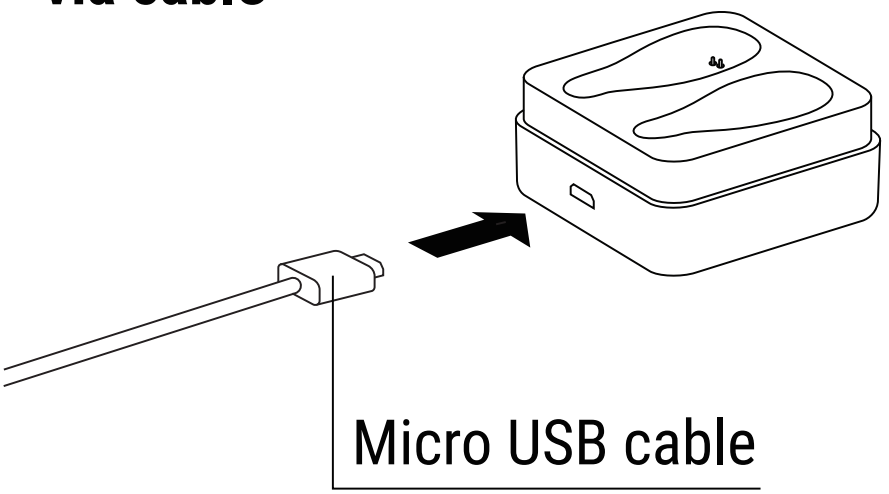

- **via wireless charger**

HYPHEN Case can be both open or closed.

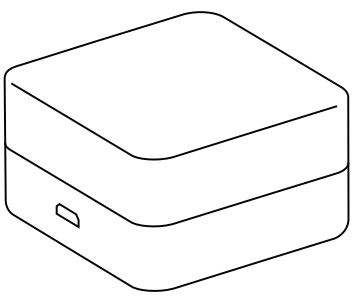

Lay carefully on the wireless charger surface.

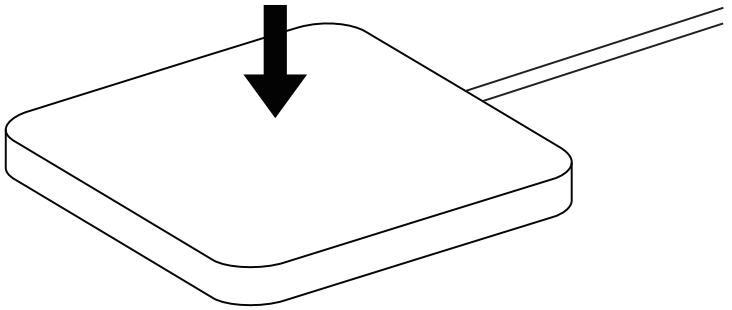

LED status

HYPHEN

Status	LED
Charging	Orange
Battery 100% in case, charging case connected to power source	OFF
Pairing to each other	White blinking (Both earbuds)
Pairing to phone	White blinking (Left only)
Paired to phone	White for 5s, then OFF
During usage	OFF
Turn OFF	Orange LED breathes twice, then OFF

LED status

HYPHEN Case

Status	LED
Charging	Orange
Battery 100%, connected to power source	White
Not connected to power source	OFF

To show case's battery level when not connected to the power source:

LED	Battery
White	Enough to charge earbuds at least once
Orange	NOT enough to charge earbuds at least once

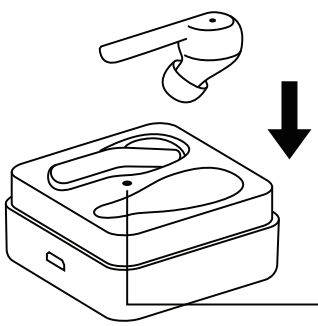

Specifications

Bluetooth: 5.0
Weight: 55 g
Power input: DC 5 V
Battery capacity:
Earbud: 3.7 V, 40 mAh
Charging case: 3.7 V , 400 mAh
Working time:
Call: 300 min
Music: 270 min
Charging time:
Earbuds: 30 min
Charging case: 60 min
Supports: HFP 1.7, HSP 1.2, A2DP 1.3, AVRCP 1.6, SPP 1.2 and PBAP 1.0
Sensitivity: 93±3 dB (at 1KHz 1mW)
Impedance: 16±10% Ω
Frequency response: 20-20 KHz
SPL Stes frequency response: 30-5000 Hz
Buzz and Rattles: 0.5 V (50 Hz - 5 KHz)
Distortion: <5% at 1000 Hz
Transmission distance: up to 30m / 100ft

Main material: ABS
Double channel support: YES
Water resistance: IPX5

Safety informations

- Listening at high volume for long periods of time can cause hearing damage.
- Do not use the product in an environment that requires your full attention (i.e. in traffic).
- Do not insert the earbuds too deep in your ears and never insert them without eartips.
- Keep the product , accessories and packaging parts out of reach of children and pets to prevent accidents or choking hazards.

Preventing damages to the product and malfunctions

Always keep the product dry and and do not expose it to extreme temperatures to avoid corrosion or deformation.
Clean the product only with a soft , dry cloth.

Intended use / Liability

This earbuds are designed for use with portable devices and hi-fi systems.
It is considered improper use when this product is used for any applications not named in the associated product guides.
The company does not accept liability for damage arising from abuse or misuse of this product.

FCC Statement:

This equipment has been tested and found to comply with the limits for a Class B digital device, pursuant to part 15 of the FCC Rules. These limits are designed to provide reasonable protection against harmful interference in a residential installation. This equipment generates, uses and can radiate radio frequency energy and, if not installed and used in accordance with the instructions, may cause harmful interference to radio communications. However, there is no guarantee that interference will not occur in a particular installation. If this equipment does cause harmful interference to radio or television reception, which can be determined by turning the equipment off and on, the user is encouraged to try to correct the interference by one or more of the following measures:

• Reorient or relocate the receiving antenna.

• Increase the separation between the equipment and receiver.

• Connect the equipment into an outlet on a circuit different from that to which the receiver is connected.

• Consult the dealer or an experienced radio/TV technician for help.

Caution: Any changes or modifications to this device not explicitly approved by manufacturer could void your authority to operate this equipment.
This device complies with part 15 of the FCC Rules. Operation is subject to the following two conditions: (1) This device may not cause harmful interference, and (2) this device must accept any interference received, including interference that may cause undesired operation.

RF Exposure Information
The device has been evaluated to meet general RF exposure requirement. The device can be used in portable exposure condition without restriction.

ROLLINGSQUARE®

www.rollingsqua.re

RollingSquare® and HYPHEN® are owned and operated by Ferraris Group Sagl, a company with its main offices in Corso San Gottardo 99, Chiasso 6830, Switzerland.