REVISIONS			
REV	DESCRIPTION	DATE	APPROVED
A	RELEASED	2019-03-11	AP

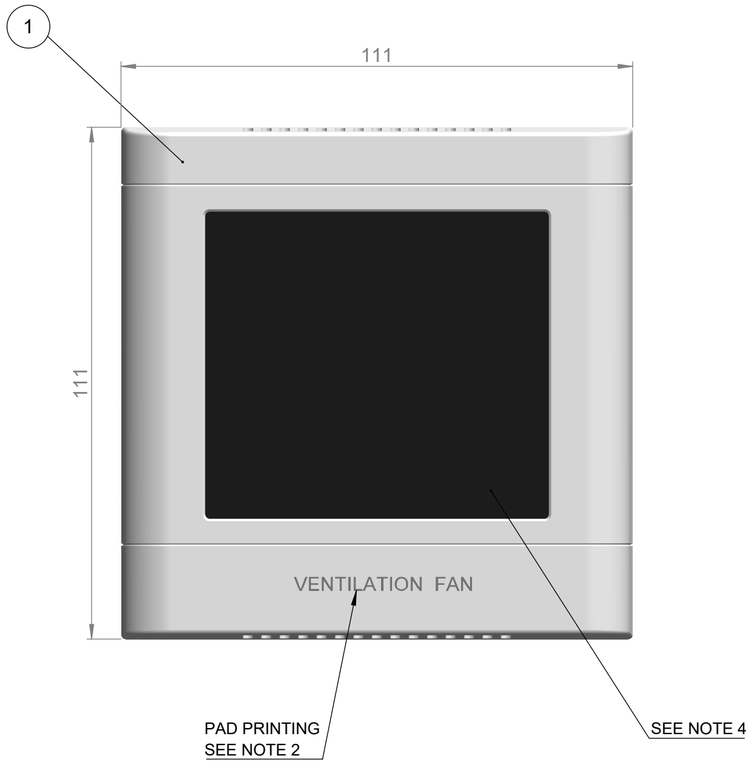

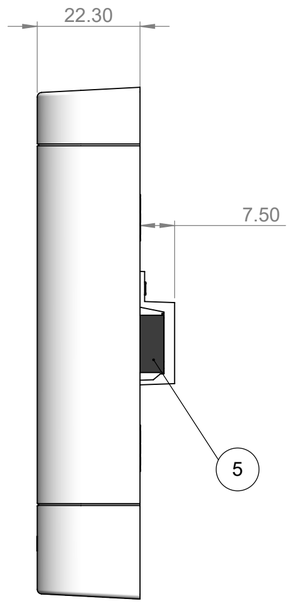

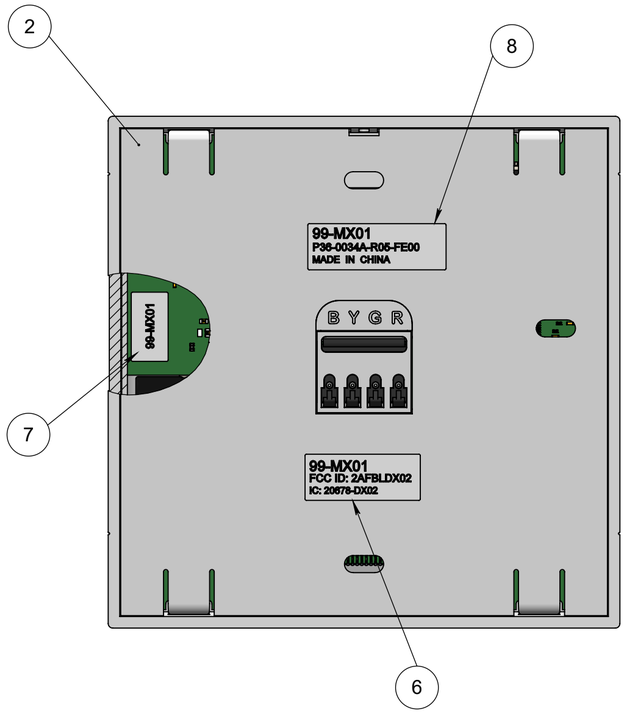

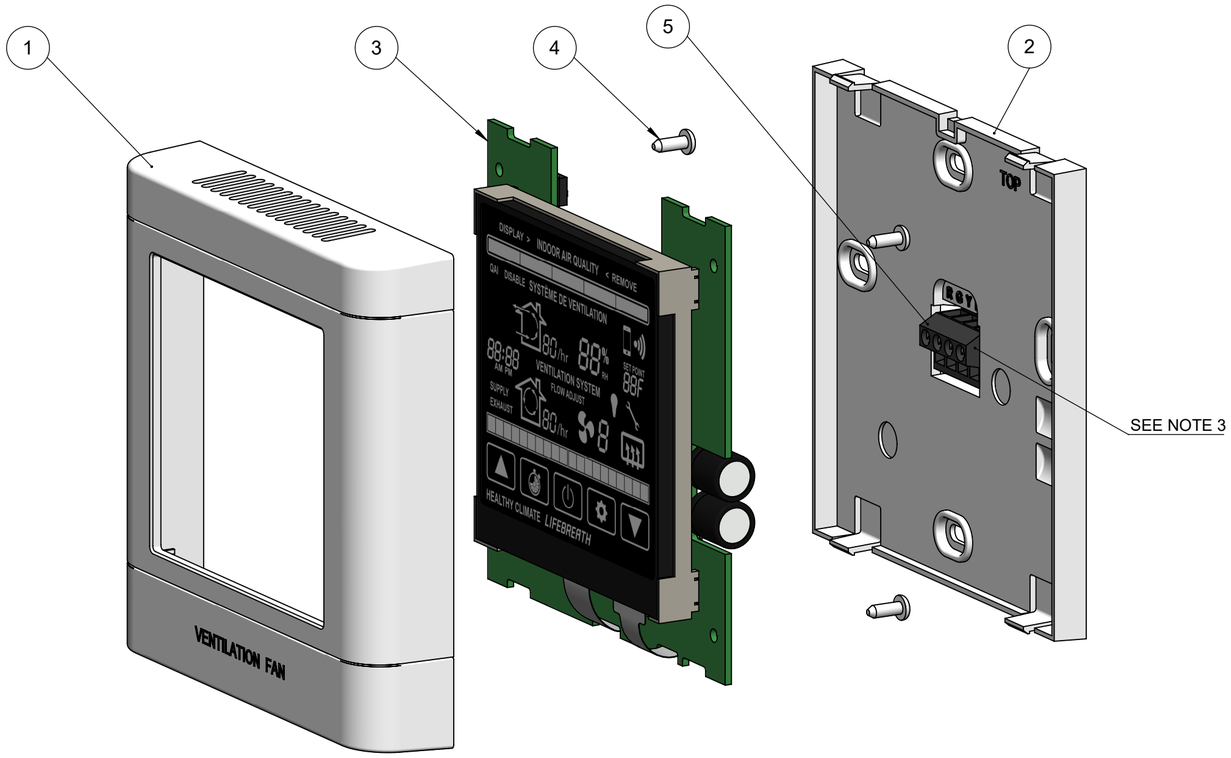

NOTES:

1. FRONT FACES OF FRONT HOUSING ITEM 1 TO BE FREE OF SINK MARKS, FLOW LINES, FLASH, DISCOLOURATIONS AND SURFACE INCONSISTENCIES.

2. PAD PRINTING TO BE SMUDGE FREE AND CENTERED AS SHOWN. INK COLOUR TO BE PANTONE COOL GRAY 9C. REFER TO FRONT HOUSING DRAWING ITEM 1.

3. CONNECTOR ITEM 5 TO BE INSERTED INTO BACK PLATE ITEM 2 AS SHOWN.

4. PROTECTIVE FILM SHEET TO BE APPLIED TO FRONT OF HOUSING TO PROTECT LCD DISPLAY.

ITEM	PART NUMBER	DESCRIPTION	QTY
9			
8	ASM-99-MX01	PRODUCT LABEL	1
7	PCA-99-MX01	PCBA PRODUCT LABEL	1
6		FCC LABEL	1
5	AVN-018-1-00081	CONNECTOR	1
4	AVN-065-2-00044	THREAD CUTTING SCREW FOR PLASTIC. SIZE #4 x 3/8" LONG, PHILIPS PAN T-25	4
3	PCA-99-MX01	PCB ASSEMBLY	1
2	PLS-99-MX01-P1813-R	BACK PLATE	1
1	PLS-99-MX01-P1813-F	FRONT HOUSING	1

Avnan ELECTRO INC.

2590 SHERIDAN GARDEN DR. #2
OAKVILLE, ONTARIO. L6J 7R2

TEL: 1-888-286-2698
FAX: 1-888-419-9997

THIS DOCUMENT CONTAINS RESTRICTED, PROPRIETARY, COPYRIGHTED INFORMATION, OWNERSHIP OF WHICH IS RETAINED BY AVNAN ELECTRO INC. RE-PRODUCTION, IMPLEMENTATION, PUBLICATION OR OTHER USE OF SUCH INFORMATION IS PROHIBITED UNLES AUTHORIZED BY AVNAN ELECTRO INC. WITH WRITTEN CONSENT

TOLERANCES: LINEAR: ± 0.1 ANGULAR: ±1°

UNITS: MILIMETERS

DRAWING NAME: **MAX WALL CONTROL ASSEMBLY**

DATE: 2019-01-31

DRAWN BY: A.P.

SCALE 1:1 | SHEET 1 OF 1

P/N **ASM-99-MX01-A**

Steps to Set up the 99-MX-01

Note: Refer to Home Owner's manual for explanation of modes of operation.

1. Turn the control ON using ON/OFF button

2. Use Mode button to cycle the following items:

=> Fan speed; =>Circ or Recirc mode; =>Dehumidistatlevel; =>IAQ enable; => Wireless timer pairing; =>Maintenance Reset; =>Factory Setting; => Fan speed; …

Press the Up or Down button to change the setting;

After 6 seconds, the display will go back to normal.

3. Set Fan speed 1, use the Up / Down button to change fan speed from 0 to 5.

4. Set Mode,use the Up / Down button to change Ventilation, or Recirculation* or combination of both.
* Recirculation not available on all models.

5. **Set Dehumidistat level,** The control displays the indoor humidity in LARGE numbers and **% RH**legend, and settings is under **SET POINT** in SMALLnumbers.Press and hold the Up / Down button to select the desired indoor humidity or OFF to cancel thisfunction.
If the indoor humidity is above the humidity settings, the unit will go into HIGH speed.

6. **Enable/Disable the Indoor Air Quality display**
The Indoor Air Quality screen will appear 5 bars on top of the LCD.
Press the Up or Down button to toggle the Dispaly/Remove the Indoor Air Quality display.
Note: Refer to Home Owner's manual for the Indoor Air Quality function speed adjustment.

7. While the Signal Strength icon display on the right side of the screen, Press the Up to start the Remote timer pairing. The 5 bars will show the progress. Until the 5 bars stopped move, the pairing is finished. Press the Up to start pairing next remote timer; or press Mode button exit pairing.

8. RESET service display: Press the Up ▲ (or Down ▼ buttonuntil service indicator disappear. This will reset the service counter to 0.

9. *When display shows "FACS" for Factory Setting,* Press the Up ▲ (or Down ▼) button to toggle"ON" and "OFF".

When choice ON, the unit will restore to FACTORY Setting: fan speed 1 (LOW), Ventilation mode, and Dehumidistat settings of 40%.
(Note: "FACS" shows on clock digits; "ON"on RH digits, "OFF" on Setpoint digits.)

10. 20/40/60 Minutes High Speed Timer
This function temporarily initiates high speed ventilation for 20, 40, or 60 minutes.

Press Timer button to select 20, 40, 60 minutes or 0 to cancel the function.

99-MX01 Installer Configuration and Air Flow Auto-Balancing process:

Step 1 Pre-condition: HRV System is power on and in any running Mode; LCD backlighting is dim;

Step 2 Press and Hold “POWER” icon for 10 seconds; The Installer Configuration screen appears; Release the POWER button;

- Press "Indoor Air Quality" area to select "Display" or Remove" IAQ function;
- Press "Ventilation System" to toggle from English to French;
- Press "SYSTEME DE VENTILATION" to toggle from French to English;
- Press "SETPINT" "DEF" to recall the FACTORY DEFAULT;
- Press "UP "DOWN" icon to set the Relative Humidity to match the real reading of the room;
- Press "MODE" icon to save and exit the config stage and go to Air Flow Balancing stage; the Air Flow Balancing initial screen will appear;

Step 3 Press "FLOW ADJUST" icon, the Voltage input and Left/Right Hand selection screen displays;

The TOP progress bar will show 1 bar;

- Press the "UP" or "DOWN" button to change the voltage;
- Press the Upper House icon to toggle the Supply Left/Right choice;
- Press the Lower House icon to toggle the Exhaust Left/Right choice;

Step 4 Press "FLOW ADJUST" to start the Auto-Balancing calibration;

- The TOP progress bar will show 2 bars;

Step 5 When the calibration is done, HRV will start Air Flow Auto Balancing from Speed 5 to Speed 1;

- The TOP progress bar will show 3 bars;

Step 6 Wait until Air Flow Auto Balancing done:

- The TOP progress bar will show 4 bars;
- If you satisfy the Auto Balancing results, while "SPEED" is 0, Press "FLOW ADJUST" to jump to next step;
- If you want to verify or adjust the air flow, press on the "FAN" icon to change the speed and the air Flow CFM will show on the left middle;
- Press "FAN SPEED" icon to select Fan Speed from 5 to 0;
- Press "MODE" icon to switch between "Supply" and "Exhaust" to verify the Air Flow CFM;
- Press "UP"/"DOWN" icon to change the "Supply" or "Exhaust" PWM which will cause changes of air flow CFM;
- Wait several seconds to allow the air flow stabilized;
- Press "FAN SPEED" icon to set Fan Speed to 0; then, Press "FLOW ADJUST" icon to go to next step;

Step 7 In this step, the HRV MAX unit will save the Air Flow data to the memory;

- The TOP progress bar will show 5 bars;

Step 8 Press “POWER” icon to EXIT the air flow balancing, or, Press "FLOW ADJUST" to repeat the air flow balancing process (Step 3).

99-MX01 Remote Timer Pairing process:

Step 1 Open the remote timer, remove battery if it already installed

Step 2 Turn on 99-MX01 by press the POWER button

Step 3 Press MODE button until Wireless icon appears on the screen

Step 4 Press UP button to start the pairing

Step 5 Take the remote timer, (While press and hold the button,) Put the battery into the remote timer. The four light will immediately flash 5 times, then only the red battery light will remain on for 12 seconds. After which, (Release the button,) the "40" led will indicate the rev code. Then, LED "20", "40", and "60" will flash at the same time until paired or will stop if not paired within 12 seconds.

Step 6 If successfully paired, press DOWN button to finish the current pairing.

Step 7 Put the timer's back plate in. its ready to install it.

Step 8 If more timer needs to be paired, go to step 4.

Step 9 Until all the timer paired, press MODE button to exit the pairing mode

FCC ID:2AS6RMX01

The device has been evaluated to meet general RF exposure requirement, The device can be used in portable exposure condition without restriction.

Federal Communication Commission (FCC) Radiation Exposure Statement

Power is so low that no RF exposure calculation is needed.

FCC statements: This device complies with part 15 of the FCC rules. Operation is subject to the following two conditions: (1) this device may not cause harmful interference, and (2) this device must accept any interference received, including interference that may cause undesired operation. NOTE: The manufacturer is not responsible for any radio or TV interference caused by unauthorized modifications or changes to this equipment. Such modifications or changes could void the user’s authority to operate the equipment.