Microtest
微测检测

# Test Report

FCC ID: 2AS79-XRT-053

Date of issue: May 27, 2019

| | |
|---|---|
| Report Number: | MTi190524E153 |
| Sample Description: | Wireless phone charging stand |
| Model(s): | XRT-053,<br>XRT-054, XRT-055, XRT-056, XRT-057, XRT-058,<br>XRT-059 |
| Applicant: | Shenzhen xiangruitong technology Co., LTD |
| Address: | B-101 No.3, meilijiayuan south area, donghuan 2nd road,<br>longhua street, longhua district, ShenZhen, China |
| Date of Test: | May 07, 2019 – May 27, 2019 |

Shenzhen Microtest Co., Ltd.
http://www.mtitest.com

This test report is valid for the tested samples only. It cannot be reproduced except in full without prior written consent of Shenzhen Microtest Co., Ltd.

Tel:(86-755)88850135 Fax: (86-755) 88850136 Web: http://www.mtitest.com E-mail: mti@51mti.com
Address: No.102A & 302A, East Block, Hengfang Industrial Park, Xingye Road, Xixiang, Bao'an District, Shenzhen, Guangdong, China

# Table of Contents

**1 GENERAL INFORMATION....4**

1.1 FEATURE OF EQUIPMENT UNDER TEST (EUT)....4
1.2 TEST MODE....4
1.3 EUT TEST SETUP....5
1.4 ANCILLARY EQUIPMENT....5
1.5 MEASUREMENT UNCERTAINTY....5

**2 SUMMARY OF TEST RESULT....6**

2.1 OPERATION CHANNEL LIST....6
2.2 TEST CHANNEL....6

**3 TEST FACILITIES AND ACCREDITATIONS....7**

3.1 TEST LABORATORY....7
3.2 ENVIRONMENTAL CONDITIONS....7
3.3 MEASUREMENT UNCERTAINTY....7
3.4 TEST SOFTWARE....7

**4 LIST OF TEST EQUIPMENT....8**

**5 TEST RESULTS....9**

5.1 ANTENNA REQUIREMENT....9
*5.1.1 Standard requirement....9*
*5.1.2 EUT Antenna....9*
5.2 CONDUCTED EMISSION....10
*5.2.1 Limits....10*
*5.2.2 Test Procedures....10*
*5.2.3 Test Setup....10*
*5.2.4 Test Result....10*
5.3 RADIATED EMISSION....15
*5.3.1 Limits....15*
*5.3.2 Test Procedures....16*
*5.3.3 Test Setup....17*
*5.3.4 Test Result....17*
5.4 OCCUPIED BANDWIDTH....22
*5.4.1 Test method....22*
*5.4.2 Test result....22*

**PHOTOGRAPHS OF THE TEST SETUP....23**

**PHOTOGRAPHS OF THE EUT....25**

# Test Result Certification

| | |
|---|---|
| Applicant's name: | Shenzhen xiangruitong technology Co., LTD |
| Address: | B-101 No.3, meilijiayuan south area, donghuan 2nd road, longhua street, longhua district, ShenZhen, China |
| Manufacture's name: | Shenzhen yijia plastic electronics Co., LTD |
| Address: | Zone A, first floor, building 9A, datianyang industrial zone, jiangshi community, gongming street, guangming new district, ShenZhen city, GuangDong province |
| Product name: | Wireless phone charging stand |
| Trademark: | Charvoxrt |
| Model name: | XRT-053, XRT-054, XRT-055, XRT-056, XRT-057, XRT-058, XRT-059 |
| Standards: | FCC Part 15C |
| Test Procedure: | ANSI C63.10-2013 |

*This device described above has been tested by Shenzhen Microtest Co., Ltd. and the test results show that the equipment under test (EUT) is in compliance with the FCC requirements. And it is applicable only to the tested sample identified in the report.*

| | | |
|---|---|---|
| Tested by: | Jone.Lee | |
| | Jone Lee | May 27, 2019 |
| Reviewed by: | Blue.zheng | |
| | Blue Zheng | May 27, 2019 |
| Approved by: | Smith Chen | |
| | Smith Chen | May 27, 2019 |

# 1 GENERAL INFORMATION

## 1.1 Feature of equipment under test (EUT)

| | |
|---|---|
| Product name: | Wireless phone charging stand |
| Model name: | XRT-053, XRT-054,<br>XRT-055, XRT-056, XRT-057, XRT-058, XRT-059 |
| Model difference: | All the model are the same circuit and RF module, except the shape. |
| Operation frequency: | 115–205 kHz |
| Modulation type: | Load modulation |
| Antenna type: | Coil Antenna |
| Power supply: | DC 5V or 9V from adapter |
| Battery: | N/A |
| Adapter information: | N/A |
| Hardware Version: | 1.0 |
| Software Version: | 2.0 |

## 1.2 Test mode

To investigate the maximum EMI emission characteristics generates from EUT, the test system was pre-scanning tested base on the consideration of following EUT operation mode or test configuration mode which possible have effect on EMI emission level. Each of these EUT operation mode(s) or test configuration mode(s) mentioned above was evaluated respectively.

| Test mode | Description |
|---|---|
| Mode 1 | Wireless charging |

Note1: The test modes were carried out for all operation modes. The final test mode of the EUT was the worst test mode for EMI, and its test data was showed.

Note2: EUT is tested under full load and belongs to the worst mode.

## 1.3 EUT test setup

See photographs of the test setup in the report for the actual setup and connections between EUT and support equipment.

## 1.4 Ancillary equipment

| Equipment | Model | S/N | Manufacturer |
|---|---|---|---|
| Adapter | HA832 | / | ZIMI |
| Load | / | / | / |

## 1.5 Measurement Uncertainty

Measurement Uncertainty for a Level of Confidence of 95 %, U=2xUc(y)

| | |
|---|---|
| Conducted emission(150kHz~30MHz) | ± 2.5 dB |
| Radiated emission(30MHz~1GHz) | ± 4.2 dB |
| Radiated emission (above 1GHz) | ± 4.3 dB |
| Temperature | ±1 degree |
| Humidity | ± 5 % |

# 2 SUMMARY OF TEST RESULT

| Item | FCC Part No. | Description of Test | Result |
|---|---|---|---|
| 1 | FCC PART 15.203 | Antenna requirement | Pass |
| 2 | FCC PART 15.207 | Conducted emission | Pass |
| 3 | FCC PART 15.209 | Radiated emission | Pass |
| 4 | FCC Part 15.215 | 20dB bandwidth | Pass |

## 2.1 Operation channel list

Channel List

| Channel | Frequency (kHz) |
|---|---|
| Low | 115 |
| Middle | 123 |
| High | 205 |

## 2.2 Test channel

| Channel | Frequency (kHz) |
|---|---|
| Middle | 123 |

# 3 TEST FACILITIES AND ACCREDITATIONS

## 3.1 Test laboratory

| | |
|---|---|
| Test Laboratory | Shenzhen Microtest Co., Ltd |
| Location | No.102A & 302A, East Block, Hengfang Industrial Park, Xingye Road, Xixiang, Bao'an District, Shenzhen, Guangdong, China |
| FCC Registration No.: | 448573 |

## 3.2 Environmental conditions

| | |
|---|---|
| Temperature: | 15ºC~35ºC |
| Humidity | 20%~75% |
| Atmospheric pressure | 98kPa~101kPa |

## 3.3 Measurement uncertainty

Measurement Uncertainty for a Level of Confidence of 95 %, U=2xUc(y)

| | |
|---|---|
| RF frequency | 1 x 10-7 |
| RF power, conducted | ± 1 dB |
| Conducted emission(150kHz~30MHz) | ± 2.5 dB |
| Radiated emission(30MHz~1GHz) | ± 4.2 dB |
| Radiated emission (above 1GHz) | ± 4.3 dB |
| Temperature | ±1 degree |
| Humidity | ± 5 % |

## 3.4 Test software

| Software Name | Manufacturer | Model | Version |
|---|---|---|---|
| RF Test System | Farad | LZ-RF | Lz_Rf 3A3 |

# 4 LIST OF TEST EQUIPMENT

| Equipment No. | Equipment Name | Manufacturer | Model | Serial No. | Calibration date | Due date |
|---|---|---|---|---|---|---|
| MTI-E001 | Spectrum Analyzer | Agilent | E4407B | MY41441082 | 2018/09/18 | 2019/09/17 |
| MTI-E004 | EMI Test Receiver | Rohde&schwarz | ESPI | 1000314 | 2018/09/18 | 2019/09/17 |
| MTI-E006 | Broadband antenna | schwarabeck | VULB9163 | 872 | 2018/09/18 | 2019/09/17 |
| MTI-E007 | Horn antenna | schwarabeck | BBHA9120D | 1201 | 2018/09/18 | 2019/09/17 |
| MTI-E014 | amplifier | America | 8447D | 3113A06150 | 2018/09/18 | 2019/09/17 |
| MTI-E015 | Conduction Immunity Signal Generator | Schloder | CDG6000 | 126A1343/2015 | 2018/09/18 | 2019/09/17 |
| MTI-E016 | Coupled decoupling network | Schloder | CND M2/M3 | A2210332/2015 | 2018/09/18 | 2019/09/17 |
| MTI-E034 | amplifier | Agilent | 8449B | 3008A02400 | 2018/09/18 | 2019/09/17 |
| MTI-E037 | Artificial power network | Schwarzbeck | NSLK8127 | #841 | 2018/09/18 | 2019/09/17 |
| MTI-E040 | Spectrum analyzer | Agilent | N9020A | MY49100060 | 2018/09/18 | 2019/09/17 |
| MTI-E041 | Signal generator | Agilent | N5182A | MY49060455 | 2018/09/18 | 2019/09/17 |
| MTI-E042 | Analog signal generator | Agilent | E4421B | GB40051240 | 2018/09/18 | 2019/09/17 |
| MTI-E043 | Power probe | Dare Instruments | RPR3006W | 16I00054SNO16 | 2018/09/18 | 2019/09/17 |
| MTI-E047 | 10dB attenuator | Mini-Circuits | UNAT-10+ | 15542 | 2018/09/18 | 2019/09/17 |
| MTI-E049 | spectrum analyzer | Rohde&schwarz | FSP-38 | 100019 | 2018/09/18 | 2019/09/17 |
| MTI-E050 | PSG Signal generator | Agilent | E8257D | MY46520873 | 2018/09/18 | 2019/09/17 |
| MTI-E061 | Active Loop Antenna 9kHz - 30MHz | Schwarzbeek | FMZB 1519 B | 00044 | 2018/09/18 | 2019/09/17 |
| MTI-E052 | 18-40GHz amplifier | Chengdu step Micro Technology | ZLNA-18-40G-21 | 1608001 | 2018/09/18 | 2019/09/17 |
| MTI-E053 | 15-40G Antenna | Schwarzbeek | BBHA9170 | BBHA9170582 | 2018/09/18 | 2019/09/17 |
| MTI-E058 | Artificial power network | Schwarzbeck | NSLK8127 | #841 | 2018/09/18 | 2019/09/17 |
| Note: the calibration interval of the above test instruments is 12 months and the calibrations are traceable to international system unit (SI). | | | | | | |

# 5 TEST RESULTS

## 5.1 Antenna requirement

### 5.1.1 Standard requirement

15.203 requirement: For intentional device, according to 15.203: an intentional radiator shall be designed to ensure that no antenna other than that furnished by the responsible party shall be used with the device

### 5.1.2 EUT Antenna

The EUT antenna is Coil Antenna. It comply with the standard requirement. In case of replacement of broken antenna the same antenna type must be used.

## 5.2 Conducted emission

### 5.2.1 Limits

For the following equipment, when designed to be connected to the public utility (AC) power line the radio frequency voltage that is conducted back onto the AC power line on any frequency or frequencies shall not exceed the limits in the following tables. Compliance with the provisions of this paragraph shall be based on the measurement of the radio frequency voltage between each power line and ground at the power terminal using a 50 μH/50 ohms line impedance stabilization network (LISN).

| Frequency (MHz) | Conducted limit (dBμV) | |
|---|---|---|
| | Quasi-peak | Average |
| 0.15 -0.5 | 66 - 56 * | 56 - 46 * |
| 0.5 -5 | 56 | 46 |
| 5 -30 | 60 | 50 |

Note : the limit of " * " marked band means the limitation decreases linearly with the logarithm of the frequency in the range.

### 5.2.2 Test Procedures

The EUT was placed 0.8 meters from the horizontal ground plane with EUT being connected to the power mains through a line impedance stabilization network (LISN). All other support equipment powered from additional LISN(s). The LISN provide 50 Ohm/ 50uH of coupling impedance for the measuring instrument.

Interconnecting cables that hang closer than 40 cm to the ground plane shall be folded back and forth in the center forming a bundle 30 to 40 cm long.

I/O cables that are not connected to a peripheral shall be bundled in the center. The end of the cable may be terminated, if required, using the correct terminating impedance. The overall length shall not exceed 1 m.

LISN is at least 80 cm from nearest part of EUT chassis.

For the actual test configuration, please refer to the related Item – photographs of the test setup.

### 5.2.3 Test Setup

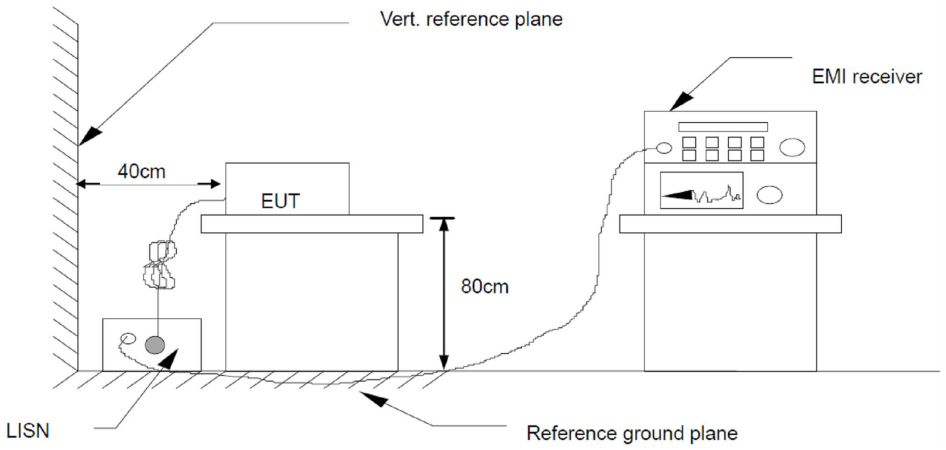


### 5.2.4 Test Result

| | | | |
|---|---|---|---|
| Temperature: | 25.1℃ | Relative Humidity: | 68% |
| Pressure: | 101kPa | Phase: | L |
| Test voltage: | DC 9V from adapter AC 120V/60Hz | Test mode: | Mode 1 |

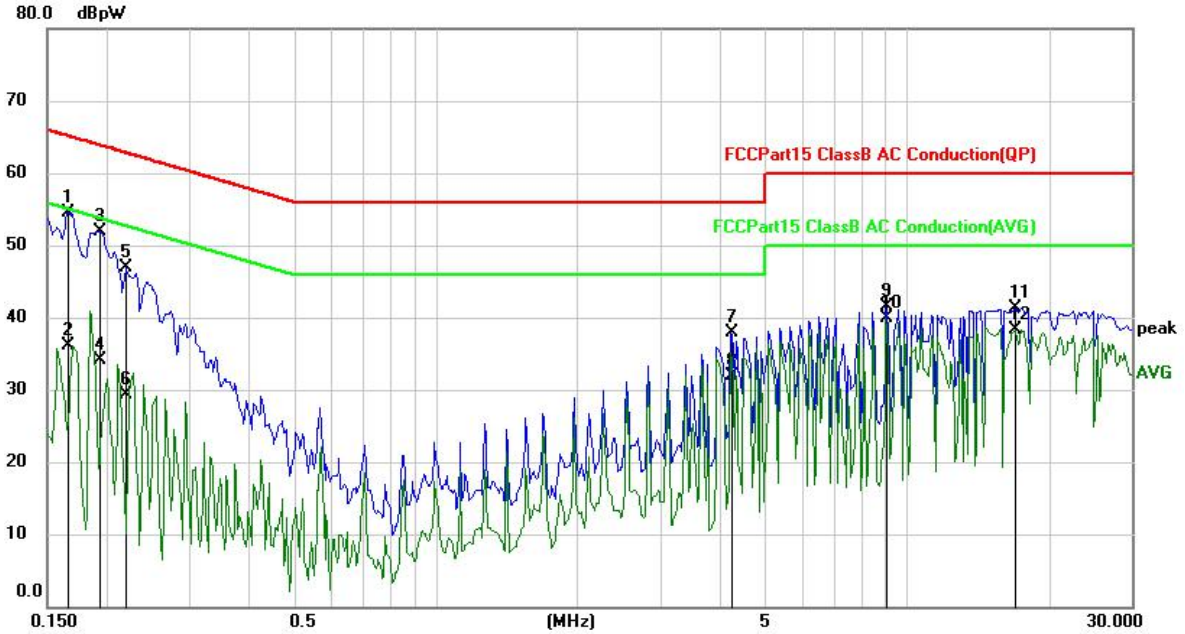


| No. | Mk. | Freq. | Reading Level | Correct Factor | Measure-ment | Limit | Over | | |
|---|---|---|---|---|---|---|---|---|---|
| | | MHz | dBpW | dB | dBpW | dBpW | dB | Detector | Comment |
| 1 | | 0.1655 | 44.87 | 9.73 | 54.60 | 65.18 | -10.58 | QP | |
| 2 | | 0.1655 | 26.41 | 9.73 | 36.14 | 55.18 | -19.04 | AVG | |
| 3 | | 0.1930 | 42.26 | 9.73 | 51.99 | 63.91 | -11.92 | QP | |
| 4 | | 0.1930 | 24.30 | 9.73 | 34.03 | 53.91 | -19.88 | AVG | |
| 5 | | 0.2203 | 37.14 | 9.73 | 46.87 | 62.81 | -15.94 | QP | |
| 6 | | 0.2203 | 19.65 | 9.73 | 29.38 | 52.81 | -23.43 | AVG | |
| 7 | | 4.2398 | 27.85 | 10.03 | 37.88 | 56.00 | -18.12 | QP | |
| 8 | | 4.2398 | 21.82 | 10.03 | 31.85 | 46.00 | -14.15 | AVG | |
| 9 | | 9.0444 | 31.33 | 10.24 | 41.57 | 60.00 | -18.43 | QP | |
| 10 | * | 9.0444 | 29.60 | 10.24 | 39.84 | 50.00 | -10.16 | AVG | |
| 11 | | 16.9742 | 31.13 | 10.15 | 41.28 | 60.00 | -18.72 | QP | |
| 12 | | 16.9742 | 28.08 | 10.15 | 38.23 | 50.00 | -11.77 | AVG | |

| | | | |
|---|---|---|---|
| Temperature: | 25.1℃ | Relative Humidity: | 68% |
| Pressure: | 101kPa | Phase: | N |
| Test voltage: | DC 9V from adapter AC 120V/60Hz | Test mode: | Mode 1 |

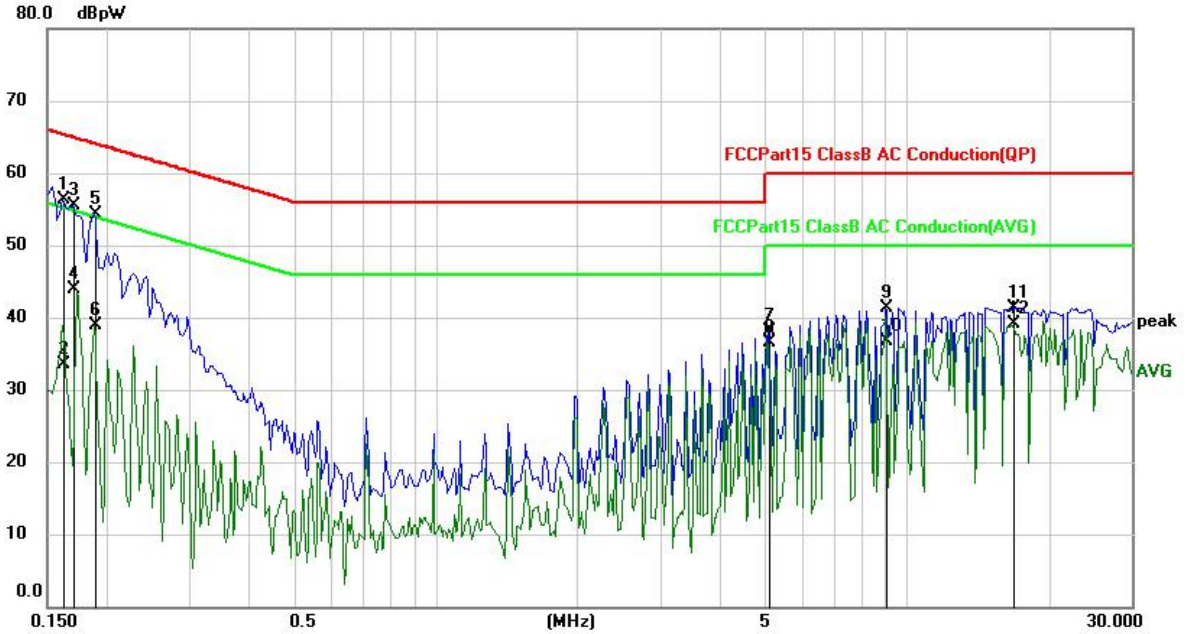


| No. | Mk. | Freq. | Reading Level | Correct Factor | Measure-ment | Limit | Over | | |
|---|---|---|---|---|---|---|---|---|---|
| | | MHz | dBpW | dB | dBpW | dBpW | dB | Detector | Comment |
| 1 | * | 0.1617 | 46.50 | 9.73 | 56.23 | 65.38 | -9.15 | QP | |
| 2 | | 0.1617 | 23.70 | 9.73 | 33.43 | 55.38 | -21.95 | AVG | |
| 3 | | 0.1695 | 45.73 | 9.73 | 55.46 | 64.98 | -9.52 | QP | |
| 4 | | 0.1695 | 34.23 | 9.73 | 43.96 | 54.98 | -11.02 | AVG | |
| 5 | | 0.1891 | 44.61 | 9.73 | 54.34 | 64.08 | -9.74 | QP | |
| 6 | | 0.1891 | 29.09 | 9.73 | 38.82 | 54.08 | -15.26 | AVG | |
| 7 | | 5.0875 | 28.10 | 10.05 | 38.15 | 60.00 | -21.85 | QP | |
| 8 | | 5.0875 | 26.39 | 10.05 | 36.44 | 50.00 | -13.56 | AVG | |
| 9 | | 9.0484 | 31.15 | 10.24 | 41.39 | 60.00 | -18.61 | QP | |
| 10 | | 9.0484 | 26.49 | 10.24 | 36.73 | 50.00 | -13.27 | AVG | |
| 11 | | 16.8387 | 31.12 | 10.15 | 41.27 | 60.00 | -18.73 | QP | |
| 12 | | 16.8387 | 28.93 | 10.15 | 39.08 | 50.00 | -10.92 | AVG | |

| | | | |
|---|---|---|---|
| Temperature: | 25.1℃ | Relative Humidity: | 68% |
| Pressure: | 101kPa | Phase: | L |
| Test voltage: | DC 9V from adapter AC 240V/60Hz | Test mode: | Mode 1 |

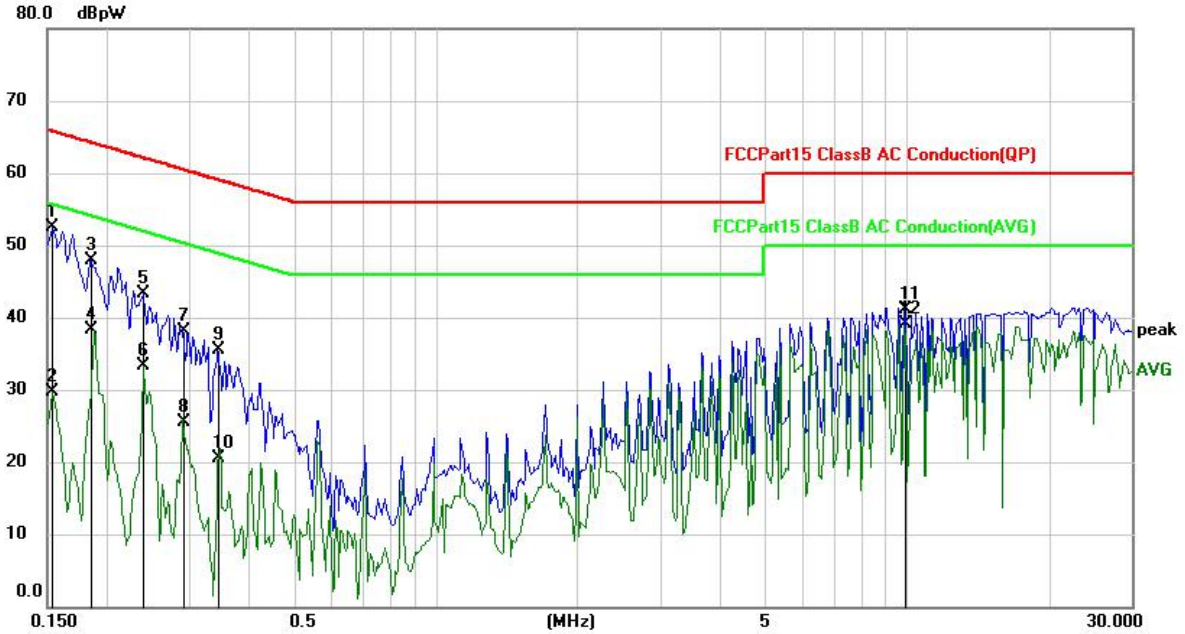


| No. | Mk. | Freq. | Reading Level | Correct Factor | Measure-ment | Limit | Over | | |
|---|---|---|---|---|---|---|---|---|---|
| | | MHz | dBpW | dB | dBpW | dBpW | dB | Detector | Comment |
| 1 | | 0.1539 | 42.86 | 9.73 | 52.59 | 65.79 | -13.20 | QP | |
| 2 | | 0.1539 | 19.88 | 9.73 | 29.61 | 55.79 | -26.18 | AVG | |
| 3 | | 0.1852 | 38.18 | 9.73 | 47.91 | 64.25 | -16.34 | QP | |
| 4 | | 0.1852 | 28.51 | 9.73 | 38.24 | 54.25 | -16.01 | AVG | |
| 5 | | 0.2398 | 33.60 | 9.73 | 43.33 | 62.10 | -18.77 | QP | |
| 6 | | 0.2398 | 23.59 | 9.73 | 33.32 | 52.10 | -18.78 | AVG | |
| 7 | | 0.2909 | 28.43 | 9.75 | 38.18 | 60.50 | -22.32 | QP | |
| 8 | | 0.2909 | 15.84 | 9.75 | 25.59 | 50.50 | -24.91 | AVG | |
| 9 | | 0.3453 | 25.71 | 9.78 | 35.49 | 59.07 | -23.58 | QP | |
| 10 | | 0.3453 | 10.82 | 9.78 | 20.60 | 49.07 | -28.47 | AVG | |
| 11 | | 9.9000 | 30.75 | 10.29 | 41.04 | 60.00 | -18.96 | QP | |
| 12 | * | 9.9000 | 28.74 | 10.29 | 39.03 | 50.00 | -10.97 | AVG | |

| | | | |
|---|---|---|---|
| Temperature: | 25.1℃ | Relative Humidity: | 68% |
| Pressure: | 101kPa | Phase: | N |
| Test voltage: | DC 9V from adapter AC 240V/60Hz | Test mode: | Mode 1 |

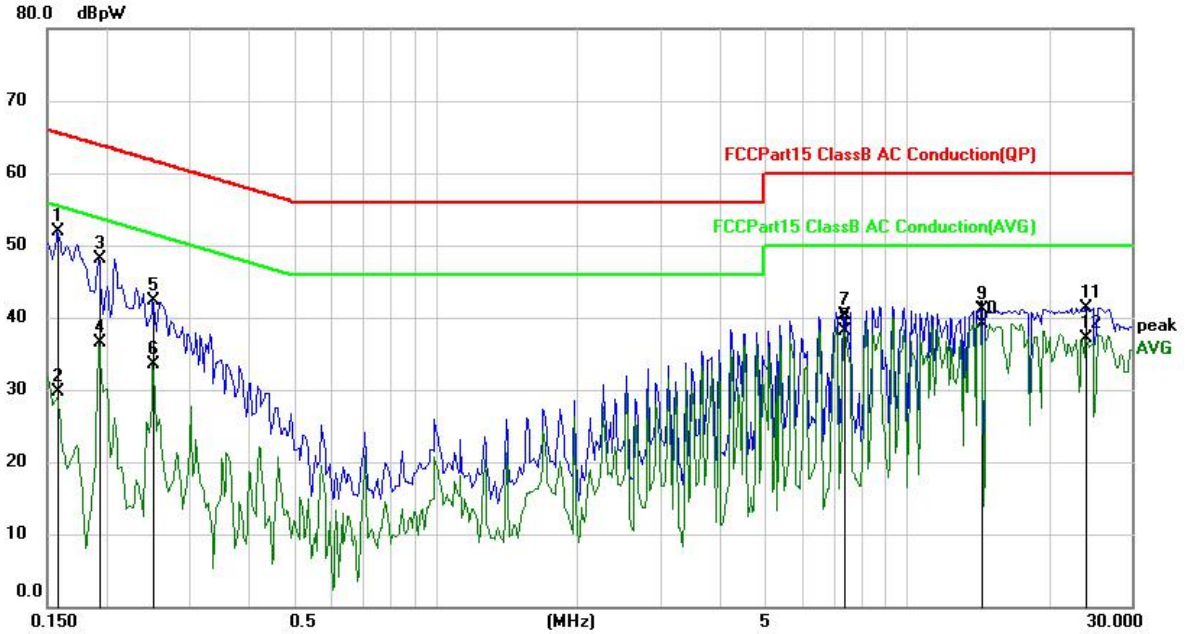


| No. | Mk. | Freq. | Reading Level | Correct Factor | Measure-ment | Limit | Over | | |
|---|---|---|---|---|---|---|---|---|---|
| | | MHz | dBpW | dB | dBpW | dBpW | dB | Detector | Comment |
| 1 | | 0.1578 | 42.25 | 9.73 | 51.98 | 65.58 | -13.60 | QP | |
| 2 | | 0.1578 | 20.07 | 9.73 | 29.80 | 55.58 | -25.78 | AVG | |
| 3 | | 0.1930 | 38.28 | 9.73 | 48.01 | 63.91 | -15.90 | QP | |
| 4 | | 0.1930 | 26.83 | 9.73 | 36.56 | 53.91 | -17.35 | AVG | |
| 5 | | 0.2516 | 32.57 | 9.73 | 42.30 | 61.70 | -19.40 | QP | |
| 6 | | 0.2516 | 23.79 | 9.73 | 33.52 | 51.70 | -18.18 | AVG | |
| 7 | | 7.3570 | 30.06 | 10.17 | 40.23 | 60.00 | -19.77 | QP | |
| 8 | | 7.3570 | 27.91 | 10.17 | 38.08 | 50.00 | -11.92 | AVG | |
| 9 | | 14.4078 | 30.85 | 10.20 | 41.05 | 60.00 | -18.95 | QP | |
| 10 | * | 14.4078 | 28.85 | 10.20 | 39.05 | 50.00 | -10.95 | AVG | |
| 11 | | 23.9664 | 31.09 | 10.21 | 41.30 | 60.00 | -18.70 | QP | |
| 12 | | 23.9664 | 26.80 | 10.21 | 37.01 | 50.00 | -12.99 | AVG | |

Note: The 5V and 9V operating voltages have been tested and the results show that the 9V operating voltage data is the worst, and the report only shows the worst mode.

5.3 Radiated emission

5.3.1 Limits

In case the emission fall within the restricted band specified on 15.205(a), then the 15.209(a) limit in the table below has to be followed.

| Frequencies (MHz) | Field Strength (micorvolts/meter) | Measurement Distance (meters) |
|---|---|---|
| 0.009~0.490 | 2400/F(KHz) | 300 |
| 0.490~1.705 | 24000/F(KHz) | 30 |
| 1.705~30.0 | 30 | 30 |
| 30~88 | 100 | 3 |
| 88~216 | 150 | 3 |
| 216~960 | 200 | 3 |
| Above 960 | 500 | 3 |

LIMITS OF RADIATED EMISSION MEASUREMENT (Above 1000MHz)

| FREQUENCY (MHz) | Class B (dBuV/m) (at 3M) | |
|---|---|---|
| | PEAK | AVERAGE |
| Above 1000 | 74 | 54 |

Notes:

The limit for radiated test was performed according to FCC PART 15C.
The tighter limit applies at the band edges.
Emission level (dBuV/m)=20log Emission level (uV/m).

FREQUENCY RANGE OF RADIATED MEASUREMENT (For unintentional radiators)

| Highest frequency generated or Upper frequency of measurement used in the device or on which the device operates or tunes (MHz) | Range (MHz) |
|---|---|
| Below 1.705 | 30 |
| 1.705 – 108 | 1000 |
| 108 – 500 | 2000 |
| 500 – 1000 | 5000 |
| Above 1000 | 5th harmonic of the highest frequency or 40 GHz, whichever is lower |

| Spectrum Parameter | Setting |
|---|---|
| Attenuation | Auto |
| Start Frequency | 1000 MHz |
| Stop Frequency | 10th carrier harmonic |
| RB / VB (emission in restricted band) | 1 MHz / 1 MHz for Peak, 1 MHz / 10Hz for Average |

| Receiver Parameter | Setting |
|---|---|
| Attenuation | Auto |
| Start ~ Stop Frequency | 9kHz~150kHz / RB 200Hz for QP |
| Start ~ Stop Frequency | 150kHz~30MHz / RB 9kHz for QP |

| Start ~ Stop Frequency | 30MHz~1000MHz / RB 120kHz for QP |
|---|---|

5.3.2 Test Procedures

a. The measuring distance of at 3 m shall be used for measurements at frequency up to 25GHz. For frequencies above 1GHz, any suitable measuring distance may be used.

b. The EUT was placed on the top of a rotating table 0.8 meters above the ground at a 3 meter semi-chamber test. The table was rotated 360 degrees to determine the position of the highest radiation.

c. The height of the equipment or of the substitution antenna shall be 0.8m; above 1GHz, the height was 1.5m, the height of the test antenna shall vary between 1 m to 4 m. Both horizontal and vertical polarizations of the antenna are set to make the measurement.

d. The initial step in collecting conducted emission data is a spectrum analyzer peak detector mode pre-scanning the measurement frequency range. Significant peaks are then marked and then Quasi Peak detector mode re-measured.

e. If the Peak Mode measured value compliance with and lower than Quasi Peak Mode Limit, the EUT shall be deemed to meet QP Limits and then no additional QP Mode measurement performed.

f. For the actual test configuration, please refer to the related Item –EUT Test Photos.

g. For the radiated emission test above 1GHz:
Place the measurement antenna away from each area of the EUT determined to be a source of emissions at the specified measurement distance, while keeping the measurement antenna aimed at the source of emissions at each frequency of significant emissions, with polarization oriented for maximum response.

h. The measurement antenna may have to be higher or lower than the EUT, depending on the radiation pattern of the emission and staying aimed at the emission source for receiving the maximum signal. The final measurement antenna elevation shall be that which maximizes the emissions. The measurement antenna elevation for maximum emissions shall be restricted to a range of heights of from 1 m to 4 m above the ground or reference ground plane.

Note: Both horizontal and vertical antenna polarities were tested and performed pretest to three orthogonal axis. The worst case emissions were reported.

5.3.3 Test Setup

Radiated Emission Test-Up Frequency Below 30MHz

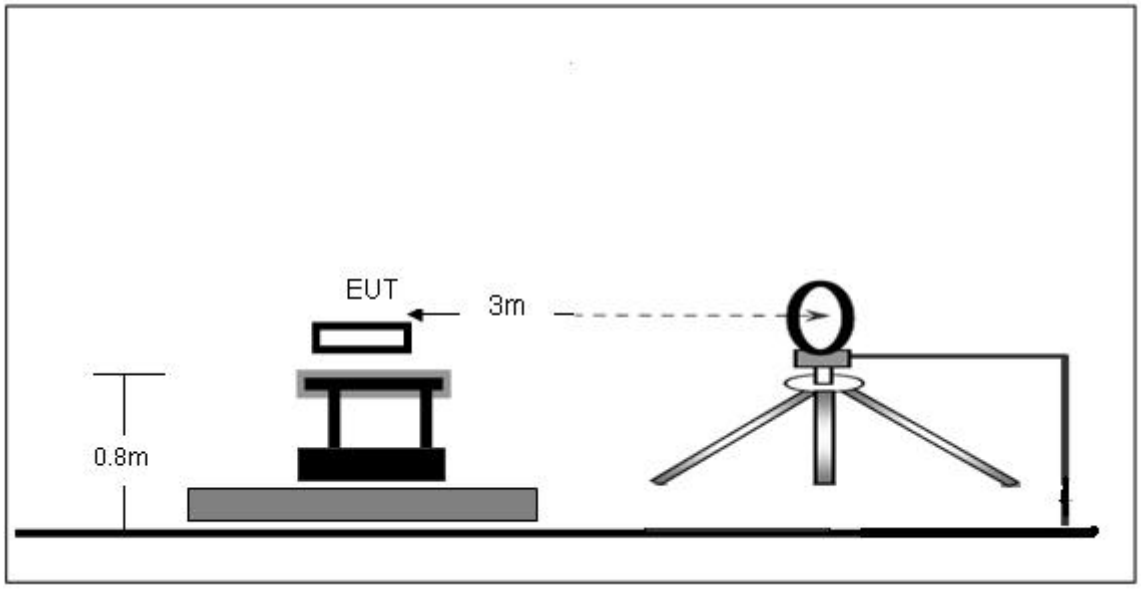


Radiated Emission Test-Up Frequency 30MHz~1GHz

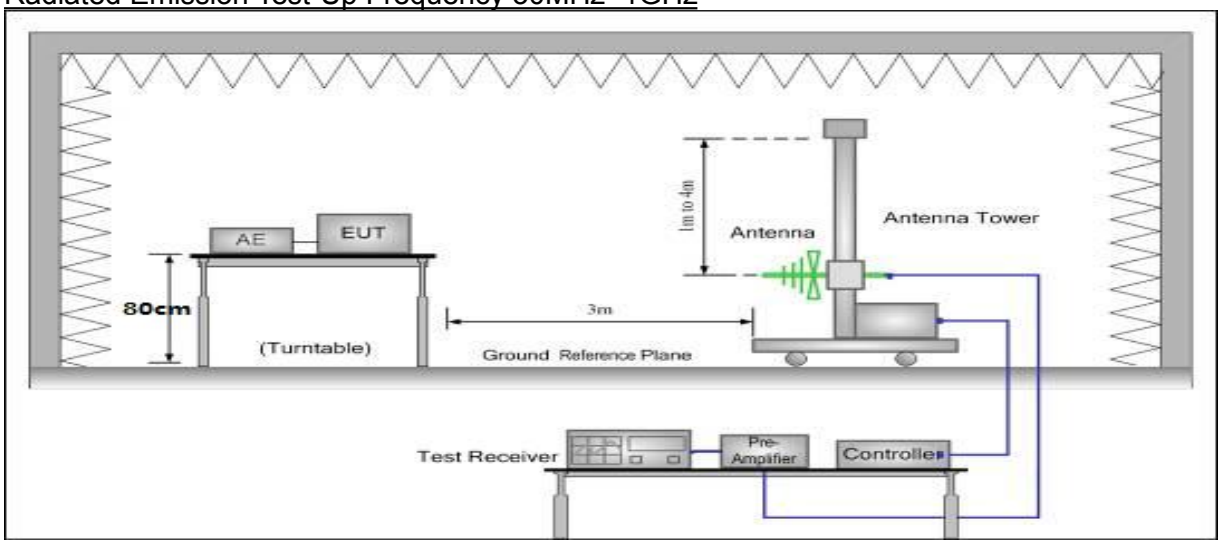


5.3.4 Test Result

Frequency range (9kHz – 30MHz)

| | | | |
|---|---|---|---|
| Temperature: | 25℃ | Relative Humidity: | 53% |
| Pressure: | 101kPa | Test mode: | Mode 1 |
| Test voltage: | DC 9V from adapter<br>AC 120V/60Hz | | |

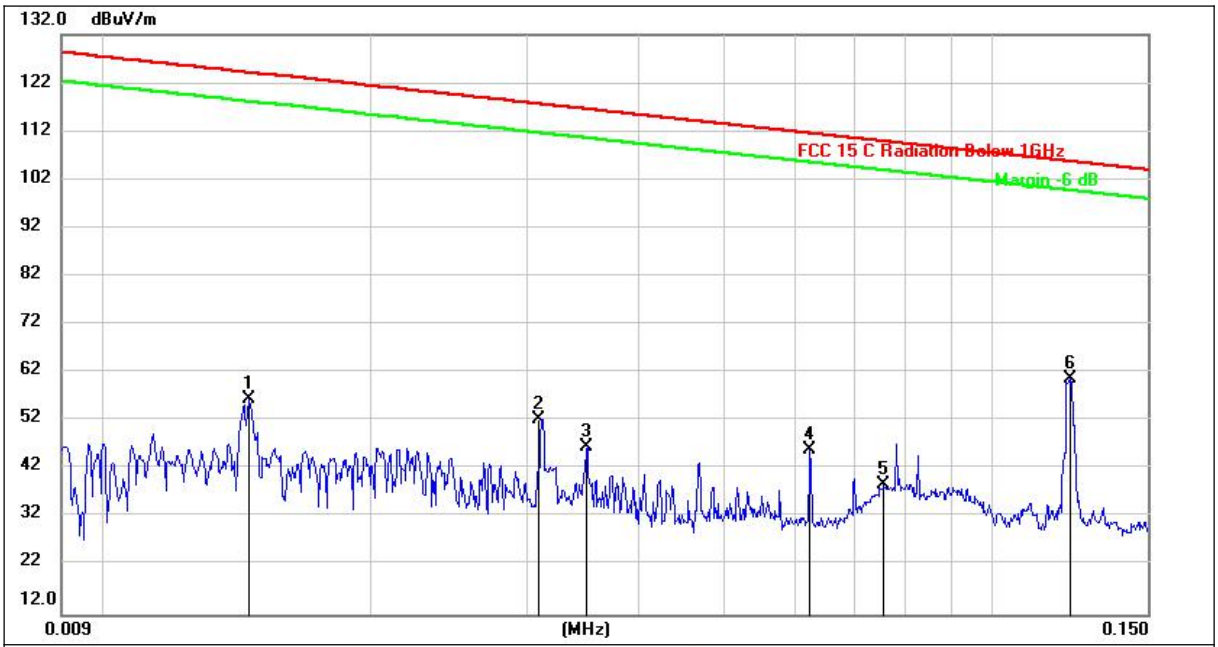


| No. | Mk. | Freq. | Reading Level | Correct Factor | Measure-ment | Limit | Over | |
|---|---|---|---|---|---|---|---|---|
| | | MHz | dBuV | dBuV/m | dBuV/m | dBuV/m | dB | Detector |
| 1 | | 0.0146 | 35.91 | 20.61 | 56.52 | 124.15 | -67.63 | peak |
| 2 | | 0.0309 | 31.80 | 20.42 | 52.22 | 117.67 | -65.45 | peak |
| 3 | | 0.0350 | 26.13 | 20.42 | 46.55 | 116.59 | -70.04 | peak |
| 4 | | 0.0625 | 25.69 | 20.43 | 46.12 | 111.59 | -65.47 | peak |
| 5 | | 0.0757 | 18.31 | 20.44 | 38.75 | 109.93 | -71.18 | peak |
| 6 | * | 0.1223 | 40.34 | 20.43 | 60.77 | 105.79 | -45.02 | peak |

| | | | |
|---|---|---|---|
| Temperature: | 25℃ | Relative Humidity: | 53% |
| Pressure: | 101kPa | Test mode: | Mode 1 |
| Test voltage: | DC 9V from adapter<br>AC 120V/60Hz | | |

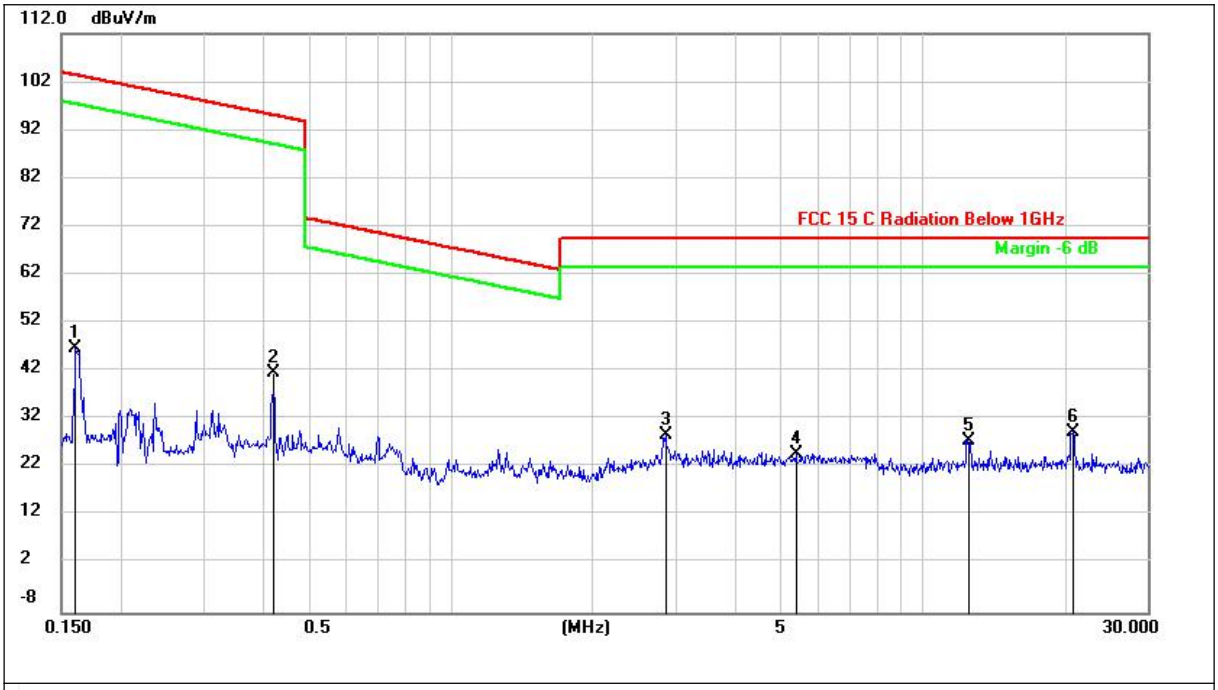


| No. | Mk. | Freq. | Reading Level | Correct Factor | Measure-ment | Limit | Over | |
|---|---|---|---|---|---|---|---|---|
| | | MHz | dBuV | dBuV/m | dBuV/m | dBuV/m | dB | Detector |
| 1 | | 0.1607 | 26.42 | 20.39 | 46.81 | 103.43 | -56.62 | peak |
| 2 | | 0.4193 | 21.35 | 20.31 | 41.66 | 95.15 | -53.49 | peak |
| 3 | | 2.8540 | 8.39 | 20.27 | 28.66 | 69.50 | -40.84 | peak |
| 4 | | 5.3900 | 4.41 | 20.33 | 24.74 | 69.50 | -44.76 | peak |
| 5 | | 12.4495 | 7.17 | 20.36 | 27.53 | 69.50 | -41.97 | peak |
| 6 | * | 20.8137 | 9.10 | 20.28 | 29.38 | 69.50 | -40.12 | peak |

Frequency range (30MHz – 1GHz)

| | | | |
|---|---|---|---|
| Temperature: | 25℃ | Relative Humidity: | 56% |
| Pressure: | 101kPa | Polarization: | Vertical |
| Test voltage: | DC 9V from adapter AC 120V/60Hz | Test mode: | Mode 1 |

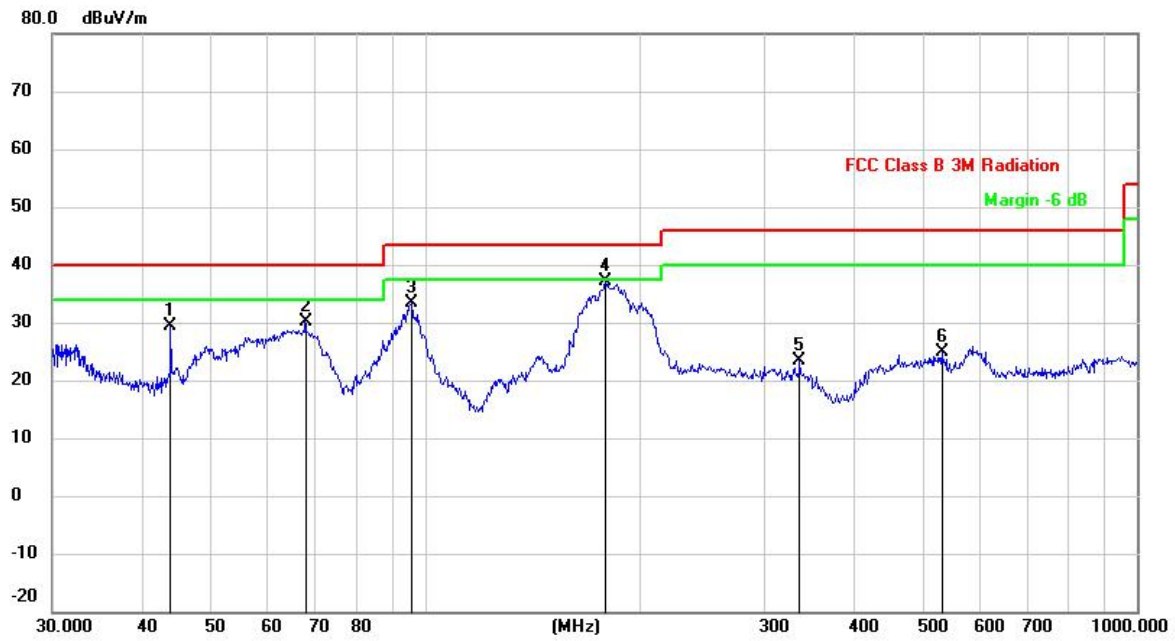


| No. | Mk. | Freq. | Reading Level | Correct Factor | Measure-ment | Limit | Over | |
|---|---|---|---|---|---|---|---|---|
| | | MHz | dBuV | dBuV/m | dBuV/m | dBuV/m | dB | Detector |
| 1 | | 43.9658 | 42.09 | -12.79 | 29.30 | 40.00 | -10.70 | QP |
| 2 | | 67.9129 | 45.49 | -15.44 | 30.05 | 40.00 | -9.95 | QP |
| 3 | | 95.7622 | 48.03 | -14.64 | 33.39 | 43.50 | -10.11 | QP |
| 4 | * | 179.3863 | 52.29 | -15.18 | 37.11 | 43.50 | -6.39 | QP |
| 5 | | 336.0350 | 33.76 | -10.31 | 23.45 | 46.00 | -22.55 | QP |
| 6 | | 531.9633 | 32.93 | -8.09 | 24.84 | 46.00 | -21.16 | QP |

| | | | |
|---|---|---|---|
| Temperature: | 25℃ | Relative Humidity: | 56% |
| Pressure: | 101kPa | Polarization: | Horizontal |
| Test voltage: | DC 9V from adapter AC 120V/60Hz | Test mode: | Mode 1 |

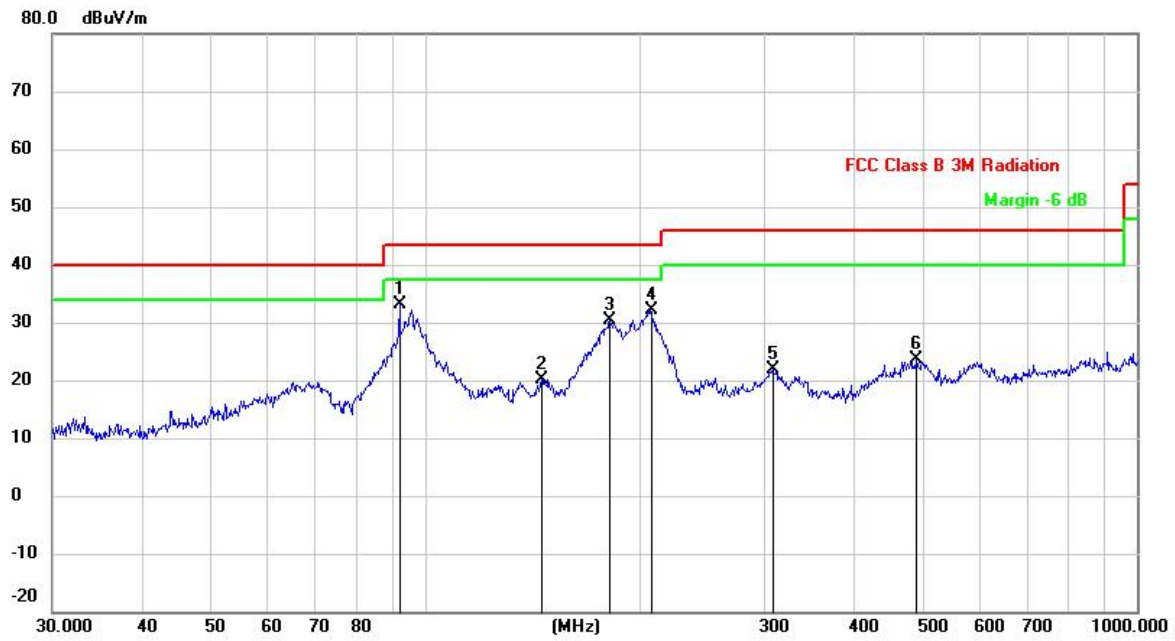


| No. | Mk. | Freq. | Reading Level | Correct Factor | Measure-ment | Limit | Over | |
|---|---|---|---|---|---|---|---|---|
| | | MHz | dBuV | dBuV/m | dBuV/m | dBuV/m | dB | Detector |
| 1 | * | 92.1388 | 48.43 | -15.37 | 33.06 | 43.50 | -10.44 | QP |
| 2 | | 145.8608 | 36.78 | -16.61 | 20.17 | 43.50 | -23.33 | QP |
| 3 | | 181.9202 | 45.34 | -14.89 | 30.45 | 43.50 | -13.05 | QP |
| 4 | | 207.1226 | 45.19 | -12.99 | 32.20 | 43.50 | -11.30 | QP |
| 5 | | 307.8312 | 32.58 | -10.81 | 21.77 | 46.00 | -24.23 | QP |
| 6 | | 490.7447 | 32.31 | -8.69 | 23.62 | 46.00 | -22.38 | QP |

Note: The 5V and 9V operating voltages have been tested and the results show that the 9V operating voltage data is the worst, and the report only shows the worst mode.

## 5.4 Occupied bandwidth

### 5.4.1 Test method

Use the following spectrum analyzer settings:
Span = approximately 2 to 3 times the 20 dB bandwidth, centered on a hopping channel
RBW ≥1% of the 20 dB bandwidth
VBW ≥RBW
Sweep = auto
Detector function = peak
Trace = max hold
The EUT should be transmitting at its maximum data rate. Allow the trace to stabilize. Use the marker-to-peak function to set the marker to the peak of the emission. Use the marker-delta function to measure 20 dB down one side of the emission. Reset the marker-delta function, and move the marker to the other side of the emission, until it is (as close as possible to) even with the reference marker level. The marker-delta reading at this point is the 20 dB bandwidth and 99% occupied bandwidth of the emission.

### 5.4.2 Test result

| Frequency (kHz) | 20dB emission bandwidth (kHz) | 99% occupied bandwidth (kHz) |
|---|---|---|
| 123 | 9.249 | 6.903 |

Test plots as below

## Photographs of the Test Setup

| Radiated emission |
| --- |
| 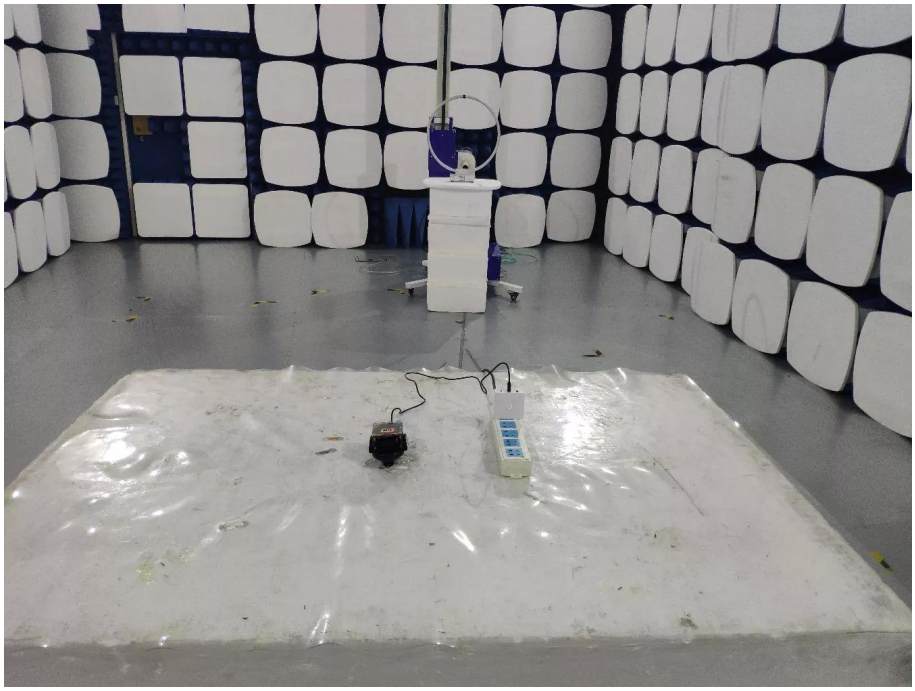 |
| 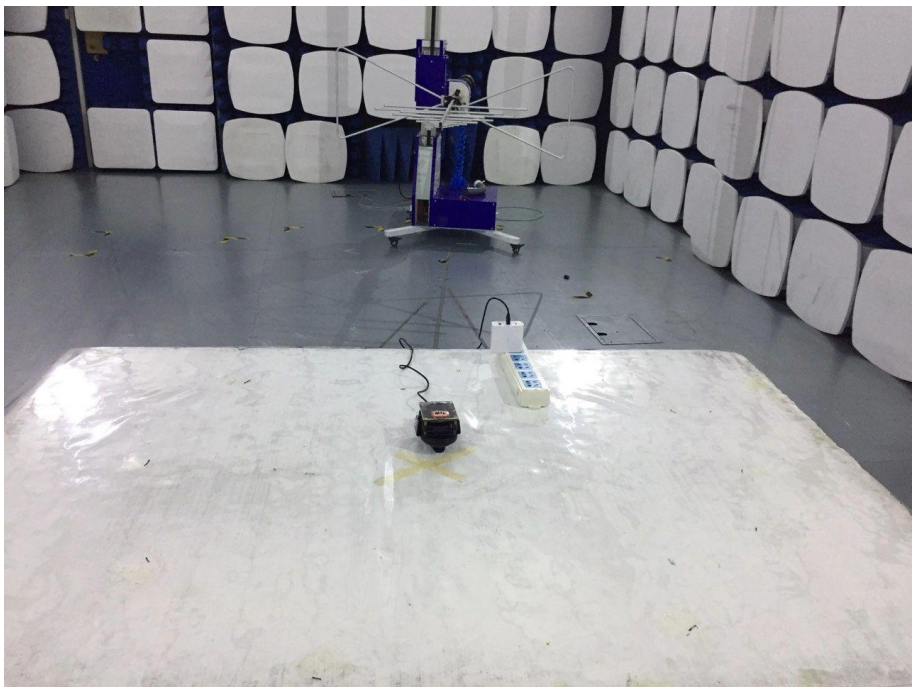 |

| Conducted emission |
| --- |
| |

## Photographs of the EUT

See the APPENDIX 1: EUT PHOTO in the report No.: MTi190524E153-1.

**----END OF REPORT----**