RADIO TEST REPORT

The device described below is tested by Dongguan Nore Testing Center Co., Ltd. to determine the maximum emission levels emanating from the device, the severe levels which the device can endure and E.U.T.'s performance criterion. The test results, data evaluation, test procedures, and equipment of configurations shown in this report were made in accordance with the procedures in ANSI C63.10(2013).

Applicant	:	Pro-Boards, LLC.
Address	:	1201 Shorewood Blvd. Madison WI United States
Manufacturer /Factory	:	ShenZhen Jtech Electronics Co..Ltd
Address	:	Room 215-216 Biwan Building Biwan Road. Xixiang Town Bao'an District ,Shenzhen Guangdong China
E.U.T.	:	Wireless Keyboard
Brand Name	:	N/A
Model No.	:	LW-001K
FCC ID	:	2AS8E-LW001K
Measurement Standard	:	FCC PART 15.249: 2017
Date of Receiver	:	April 24, 2019
Date of Test	:	April 24, 2019 to June 11, 2019
Date of Report	:	June 28, 2019

This Test Report is Issued Under the Authority of :

Prepared by	Approved & Authorized Signer
Alina Guo / Engineer	Iori Fan / Authorized Signatory

This test report is for the customer shown above and their specific product only. This report applies to above tested sample only and shall not be reproduced in part without written approval of Dongguan Nore Testing Center Co., Ltd.

TEL: +86-769-22022444 FAX: +86-769-22022799 Web: www.ntc-c.com
Address: Building D, Gaosheng Science and Technology park, Hongtu road, Nancheng district, Dongguan city, Guangdong province, China

Table of Contents

1. GENERAL INFORMATION 4

1.1 PRODUCT DESCRIPTION FOR EQUIPMENT UNDER TEST 4
1.2 RELATED SUBMITTAL(S) / GRANT (S) 6
1.3 TEST METHODOLOGY 6
1.4 EQUIPMENT MODIFICATIONS 6
1.5 SUPPORT DEVICE 6
1.6 TEST FACILITY AND LOCATION 7
1.7 SUMMARY OF TEST RESULTS 8

2. SYSTEM TEST CONFIGURATION 9

2.1 EUT CONFIGURATION 9
2.2 SPECIAL ACCESSORIES 9
2.3 DESCRIPTION OF TEST MODES 9
2.4 EUT EXERCISE 9

3. CONDUCTED EMISSIONS TEST 10

3.1 TEST SET-UP (BLOCK DIAGRAM OF CONFIGURATION) 10
3.2 TEST CONDITION 10
3.3 MEASUREMENT RESULTS 10

4. RADIATED EMISSION TEST 11

4.1 TEST SET-UP (BLOCK DIAGRAM OF CONFIGURATION) 11
4.2 MEASUREMENT PROCEDURE 12
4.3 LIMIT 13
4.4 MEASUREMENT RESULTS 14

5. 20DB BANDWIDTH 18

5.1 MEASUREMENT PROCEDURE 18
5.2 TEST SET-UP (BLOCK DIAGRAM OF CONFIGURATION) 18
5.3 MEASUREMENT RESULTS 18

6. BAND EDGE 21

6.1 MEASUREMENT PROCEDURE 21
6.2 LIMIT 21
6.3 MEASUREMENT RESULTS 21

7. ANTENNA REQUIREMENT 22

7.1 MEASUREMENT PROCEDURE 24
7.2 MEASUREMENT RESULTS 24

8. TEST EQUIPMENT LIST 25

Revision History of This Test Report

Report Number	Description	Issued Date
NTC1904231FV00	Initial Issue	2019-06-28

1. GENERAL INFORMATION

1.1 Product Description for Equipment under Test

Product Name	:	Wireless Keyboard
Main model number	:	LW-001K
Additional Model number	:	N/A
Brand Name	:	N/A
Power Supply	:	2*DC 1.5V AAA battery
Test voltage	:	2*DC 1.5V AAA battery
Model Difference Description	:	N/A
Hardware version	:	A1
Software version	:	A0
Note	:	N/A
Remark	:	N/A

Technical Specification:

2.4G Function:

Frequency Range	:	2402~2480MHz
Modulation Type	:	GFSK
Number of Channel	:	79
Channel space	:	1MHz
Antenna Type	:	PCB
Antenna Gain	:	2dBi (Declaration by manufacturer)

Channel List:

Channel	Frequency MHz	Channel	Frequency MHz	Channel	Frequency MHz	Channel	Frequency MHz
1	2402	21	2422	41	2442	61	2462
2	2403	22	2423	42	2443	62	2463
3	2404	23	2424	43	2444	63	2464
4	2405	24	2425	44	2445	64	2465
5	2406	25	2426	45	2446	65	2466
6	2407	26	2427	46	2447	66	2467
7	2408	27	2428	47	2448	67	2468
8	2409	28	2429	48	2449	68	2469
9	2410	29	2430	49	2450	69	2470
10	2411	30	2431	50	2451	70	2471
11	2412	31	2432	51	2452	71	2472
12	2413	32	2433	52	2453	72	2473
13	2414	33	2434	53	2454	73	2474
14	2415	34	2435	54	2455	74	2475
15	2416	35	2436	55	2456	75	2476
16	2417	36	2437	56	2457	76	2477
17	2418	37	2438	57	2458	77	2478
18	2419	38	2439	58	2459	78	2479
19	2420	39	2440	59	2460	79	2480
20	2421	40	2441	60	2461		

Note: The Lowest, middle, and the Highest frequency of channel were selected to perform the test. The frequency selected see below:

The Lowest frequency: 2402MHz
The middle frequency: 2441MHz
The Highest frequency: 2480MHz

1.2 Related Submittal(s) / Grant (s)

This submittal(s) (test report) is intended for FCC ID: **2AS8E-LW001K** filing to comply with Section 15.249 of the FCC Part 15 (2017), Subpart C Rule.

1.3 Test Methodology

Radiated emission measurements were performed according to the procedures in ANSI C63.10 (2013). Radiated emission measurement was performed in semi-anechoic chamber and conducted emission measurement was performed in shield room. For radiated emission measurement, preliminary scans were performed in the semi-anechoic chamber only to determine the worst case modes. All radiated tests were performed at an antenna to EUT distance of 3 meters.

1.4 Equipment Modifications

Not available for this EUT intended for grant.

1.5 Support Device

N/A

1.6 Test Facility and Location

Site Description

EMC Lab	:	Listed by CNAS, August 13, 2018 The certificate is valid until August 13, 2024 The Laboratory has been assessed and proved to be in compliance with CNAS/CL01 The Certificate Registration Number is L5795. Listed by A2LA, November 01, 2017 The certificate is valid until December 31, 2019 The Laboratory has been assessed and proved to be in compliance with ISO17025 The Certificate Registration Number is 4429.01 Listed by FCC, November 06, 2017 The Designation Number is CN1214 Test Firm Registration Number: 907417 Listed by Industry Canada, June 08, 2017 The Certificate Registration Number. Is 46405-9743
Name of Firm	:	Dongguan Nore Testing Center Co., Ltd. (Dongguan NTC Co., Ltd.)
Site Location	:	Building D, Gaosheng Science and Technology park, Hongtu road, Nancheng district, Dongguan city, Guangdong province, China

1.7 Summary of Test Results

FCC Rules	Description Of Test	Uncertainty	Result
§15.207(a)	AC Power Conducted Emission	±1.06dB	Not Applicable
§15.249(a)/ 15.209	Radiated Emissions	±3.70dB	Compliant
§15.249(d)/ 15.205	Band Edge	±1.70dB	Compliant
§15.215(c)	20dB Bandwidth	±1.42 x10^{-4}%	Compliant
§15.203	Antenna Requirement	---	Compliant

Note: 1. The EUT has been tested as an independent unit. And Continual transmitting in maximum power (The new battery be used during test)
2. Due to this EUT is powered by battery only, the AC Power Conducted Emission is not applicable.
3. The EUT powered by battery and operating multiple positions, so the EUT shall be performed two or three orthogonal planes. The worst plane is Z.

Example:

X Plane	Y Plane	Z Plane
	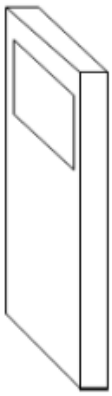	

2. System Test Configuration

2.1 EUT Configuration

The EUT configuration for testing is installed on RF field strength measurement to meet the Commissions requirement and operating in a manner which intends to maximize its emission characteristics in a continuous normal application.

2.2 Special Accessories

Not available for this EUT intended for grant.

2.3 Description of test modes

The EUT has been tested under operating condition. The Lowest, middle and highest frequencies were chosen for testing.

2.4 EUT Exercise

The EUT was operated in the engineering mode to fix the Tx frequency that was for the purpose of the measurements.

3. Conducted Emissions Test

3.1 Test SET-UP (Block Diagram of Configuration)

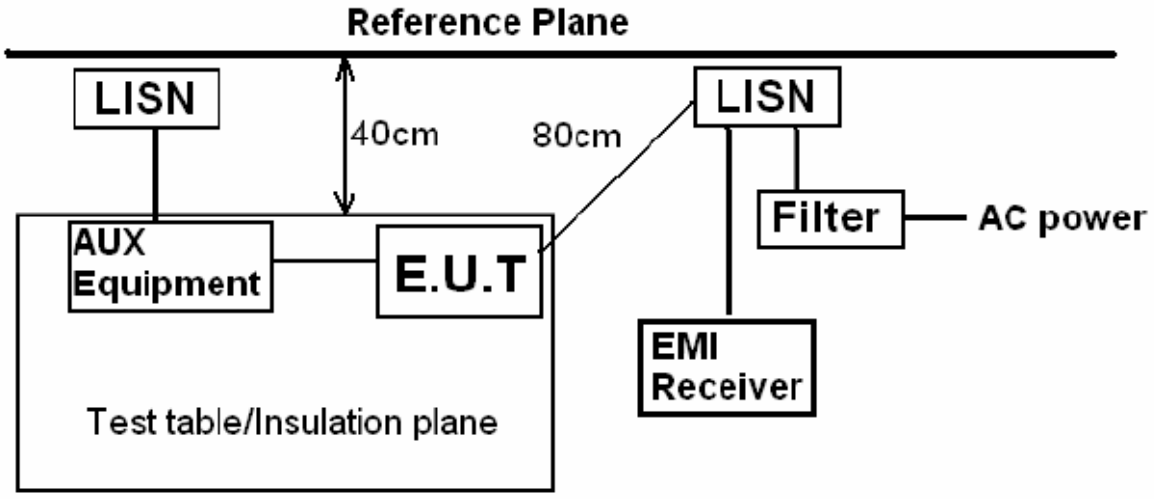

3.2 Test Condition

Test Requirement: FCC Part 15.207

Frequency Range: 150KHz ~ 30MHz

Detector: RBW 9KHz, VBW 30KHz

Operation Mode: TX

3.3 Measurement Results

Not Applicable.

4. Radiated Emission Test

4.1 Test SET-UP (Block Diagram of Configuration)

4.1.1 Radiated Emission Test Set-Up, Frequency Below 30MHz

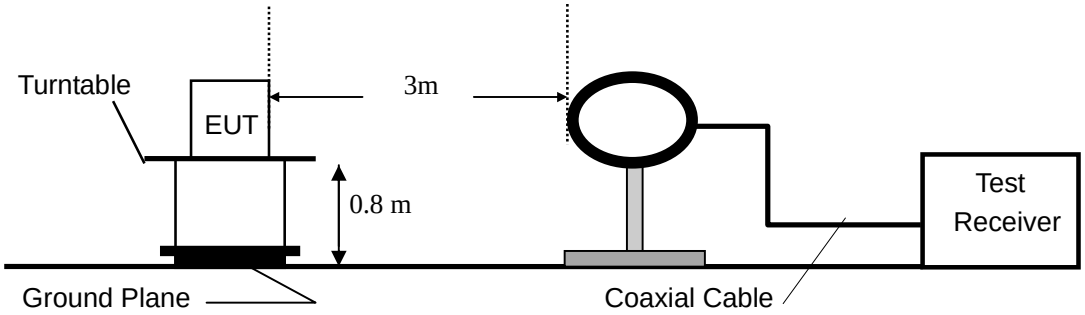

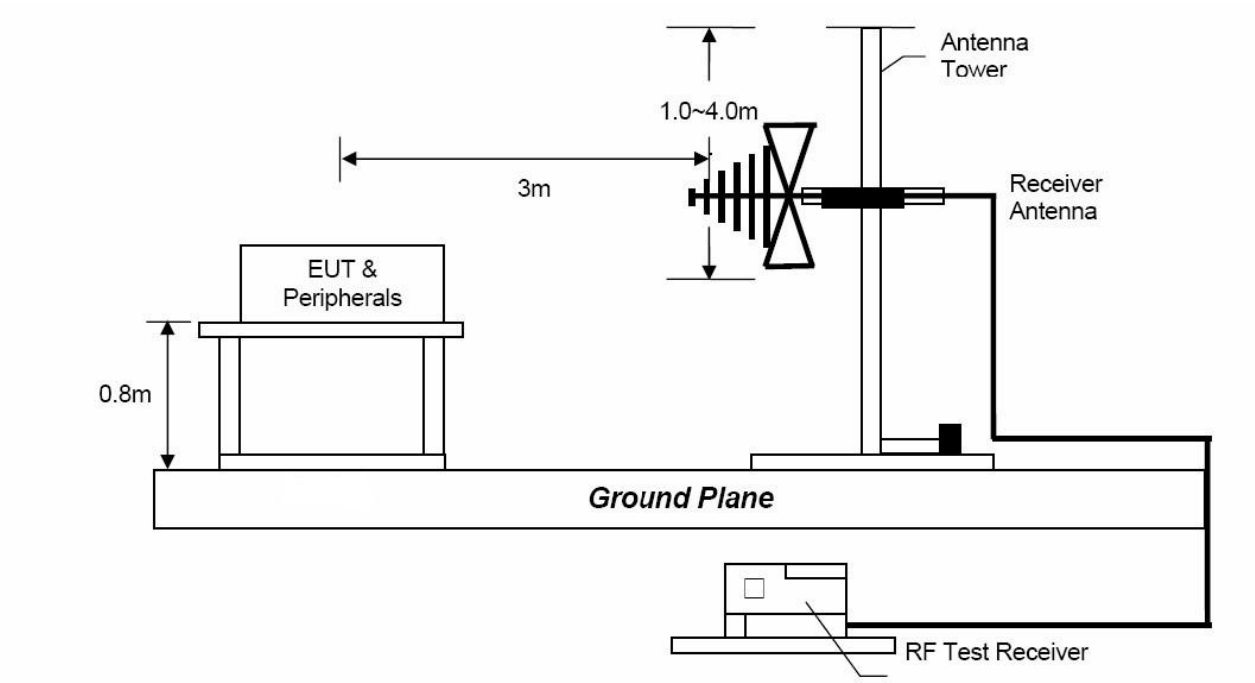

4.1.2 Radiated Emission Test Set-Up, Frequency above 1GHz

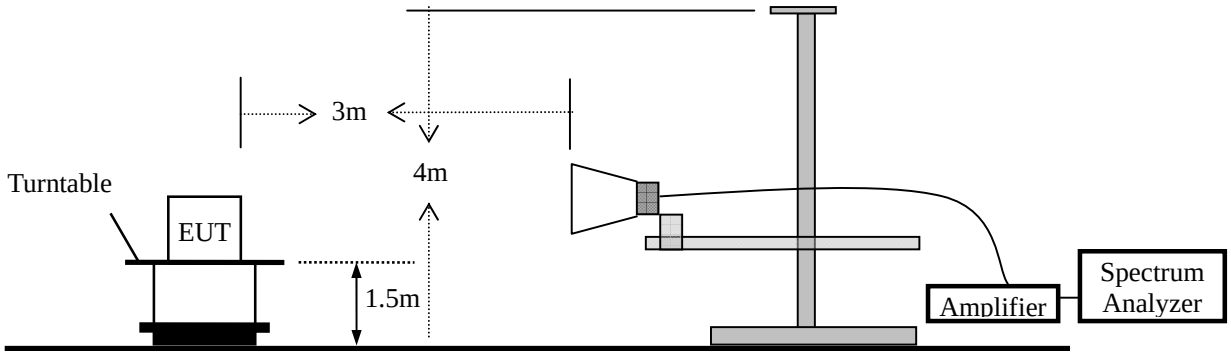

4.2 Measurement Procedure

a. Blow 1GHz, the EUT was placed on the top of a rotating table 0.8 meters above the ground at a 3 meter semi- anechoic chamber room.
b. For the radiated emission test above 1GHz:
   The EUT was placed on the top of a rotating table 1.5 meters above the ground at a 3 meter full anechoic chamber room. The table was rotated 360 degrees to determine the position of the highest radiation. Place the measurement antenna away from each area of the EUT determined to be a source of emissions at the specified measurement distance, while keeping the measurement antenna aimed at the source of emissions at each frequency of significant emissions, with polarization oriented for maximum response. The measurement antenna may have to be higher or lower than the EUT, depending on the radiation pattern of the emission and staying aimed at the emission source for receiving the maximum signal. The final measurement antenna elevation shall be that which maximizes the emissions. The measurement antenna elevation for maximum emissions shall be restricted to a range of heights of from 1 m to 4 m above the ground or reference ground plane.
c. The EUT was set 3 meters away from the interference-receiving antenna, which was mounted on the top of a variable-height antenna tower.
d. The height of antenna is varied from one meter to four meters above the ground to determine the maximum value of the field strength. Both horizontal and vertical polarizations of the antenna are set to make the measurement.
e. For each suspected emission, the EUT was arranged to its worst case and then the antenna was tuned to heights from 1 meter to 4 meters and the rotatable table was turned from 0 degrees to 360 degrees to find the maximum reading. The test-receiver system was set to peak detect function and specified bandwidth with maximum hold mode.
f. A Quasi-peak measurement was then made for that frequency point for below 1GHz test. PK and AV for above 1GHz emission test.
   During the radiated emission test, the spectrum analyzer was set with the following configurations:

Frequency Band (MHz)	Level	Resolution Bandwidth	Video Bandwidth
30 to 1000	QP	120 kHz	300 kHz
Above 1000	Peak	1 MHz	3 MHz
	Average	1 MHz	10 Hz

4.3 Limit

Frequency range MHz	Distance Meters	Field Strengths Limit (15.209)	
		μV/m	
0.009 ~ 0.490	300	2400/F(kHz)	
0.490 ~ 1.705	30	24000/F(kHz)	
1.705 ~ 30	30	30	
30 ~ 88	3	100	
88 ~ 216	3	150	
216 ~ 960	3	200	
Above 960	3	500	
Frequency range MHz	Distance Meters	Field Strengths Limit (15.249)	
		mV/m (Field strength of fundamental)	μV/m (Field strength of Harmonics)
902 ~ 928	3	50	500
2400 ~ 2483.5	3	50	500
5725 ~ 5875	3	50	500
24000 ~ 2425000	3	250	2500

Remark: (1) Emission level (dB)μV = 20 log Emission level μV/m
(2) The smaller limit shall apply at the cross point between two frequency bands.
(3) As shown in 15.35(b), for frequencies above 1000MHz, the field strength limits are based on average detector, however, the peak field strength of any emission shall not exceed the maximum permitted average limits, specified above by more than 20dB under any condition of modulation.
(4) The frequency range scanned is from the lowest radio frequency signal generated in the device which is greater than 9 kHz to the tenth harmonic of the highest fundamental frequency or 40 GHz, whichever is lower.
(5) Sample of data calculate:
Level=Reading + Factor; Margin= Level-Limit
Factor=CF+AF+AG
Where CF=Cable attenuation factor in dB
AF= Antenna factor in dB
AG=Amplifier Gain in dB

4.4 Measurement Results

Please refer to following the test plots of the worst case: GFSK(Low channel).

Dongguan NTC Co., Ltd.
Tel:+86-769-22022444 Fax:+86-769-22022799
Web: Http://www.ntc-c.com

Radiated Emission Measurement

File :LW-001 Data :#4 Date: 2019/5/20 Time: 15:41:39

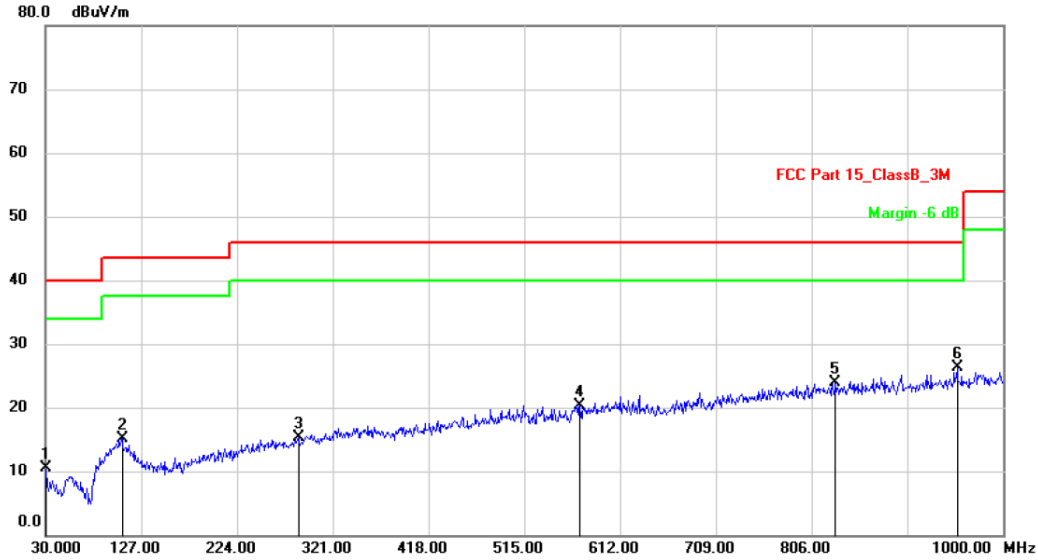

Site: 3m Chamber
Limit: FCC Part 15_ClassB_3M
EUT: Wireless Keyboard
M/N: LW-001K
Mode: TX
Note:

Polarization: ***Horizontal***
Power: DC3V
Distance: 3m

Temperature: 26
Humidity: 47 %

No.	Mk.	Freq.	Reading Level	Correct Factor	Measure-ment	Limit	Over		Antenna Height	Table Degree	
		MHz	dBuV	dB/m	dBuV/m	dBuV/m	dB	Detector	cm	degree	Comment
1		30.0000	27.04	-16.57	10.47	40.00	-29.53	QP			
2		107.6000	27.34	-12.16	15.18	43.50	-28.32	QP			
3		286.0799	26.09	-10.85	15.24	46.00	-30.76	QP			
4		571.2600	26.12	-5.85	20.27	46.00	-25.73	QP			
5		830.2500	25.40	-1.44	23.96	46.00	-22.04	QP			
6	*	953.4400	26.43	-0.20	26.23	46.00	-19.77	QP			

*:Maximum data x:Over limit !:over margin 〈Reference Only

Note: Below 30MHz, the emissions are lower than 20dB below the allowable limit.

Dongguan NTC Co., Ltd.
Tel:+86-769-22022444 Fax:+86-769-22022799
Web: Http://www.ntc-c.com

Radiated Emission Measurement

File :LW-001 Data :#3 Date: 2019/5/20 Time: 15:34:45

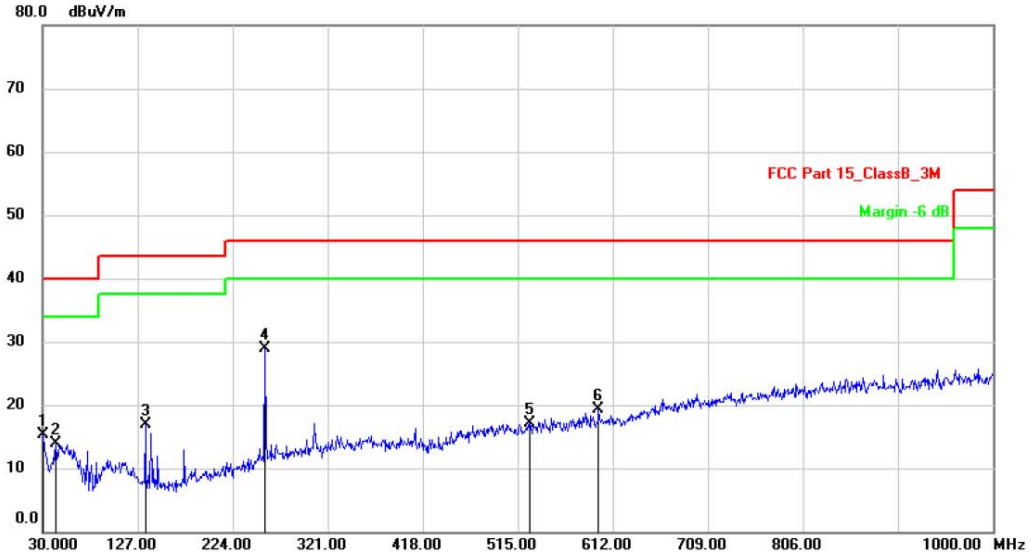

Site: 3m Chamber
Limit: FCC Part 15_ClassB_3M
EUT: Wireless Keyboard
M/N: LW-001K
Mode: TX
Note:

Polarization: ***Vertical***
Power: DC3V
Distance: 3m

Temperature: 26
Humidity: 47 %

No.	Mk.	Freq.	Reading Level	Correct Factor	Measure-ment	Limit	Over		Antenna Height	Table Degree	
		MHz	dBuV	dB/m	dBuV/m	dBuV/m	dB	Detector	cm	degree	Comment
1		30.9700	31.21	-15.83	15.38	40.00	-24.62	QP			
2		43.5800	27.94	-14.06	13.88	40.00	-26.12	QP			
3		134.7600	35.23	-18.36	16.87	43.50	-26.63	QP			
4	*	256.9800	42.33	-13.50	28.83	46.00	-17.17	QP			
5		527.6100	25.89	-8.69	17.20	46.00	-28.80	QP			
6		597.4500	26.46	-7.07	19.39	46.00	-26.61	QP			

*:Maximum data x:Over limit !:over margin 〈Reference Only

Note: Below 30MHz, the emissions are lower than 20dB below the allowable limit.

Frequency Range:	1-25GHz	Test Date :	May 20, 2019
Test Result:	PASS	Temperature :	21 ℃
Measured Distance:	3m	Humidity :	55 %
Test By:	Sance		

Freq. (MHz)	Ant.Pol. (H/V)	Reading Level(dBuV)		Factor (dB/m)	Emission Level (dBuV)		Limit 3m (dBuV/m)		Margin (dB)	
		PK	AV		PK	AV	PK	AV	PK	AV
Operation Mode: TX Mode (Low)										
2402	V	83.23	42.35	0.13	83.36	42.48	114.00	94.00	-30.64	-51.52
4804	V	52.52	32.47	6.30	58.82	38.77	74.00	54.00	-15.18	-15.23
7206	V	49.79	31.59	10.44	60.23	42.03	74.00	54.00	-13.77	-11.97

2402	H	83.94	42.33	0.13	84.07	42.46	114.00	94.00	-29.93	-51.54
4804	H	52.82	32.75	6.30	59.12	39.05	74.00	54.00	-14.88	-14.95
7206	H	50.44	31.23	10.44	60.88	41.67	74.00	54.00	-13.12	-12.33

Operation Mode: TX Mode (Mid)										
2441	V	81.24	40.29	0.13	81.37	40.42	114.00	94.00	-32.63	-53.58
4882	V	52.52	31.97	6.60	59.12	38.57	74.00	54.00	-14.88	-15.43
7323	V	50.52	31.11	10.55	61.07	41.66	74.00	54.00	-12.93	-12.34

2441	H	80.74	41.13	0.13	80.87	41.26	114.00	94.00	-33.13	-52.74
4882	H	52.16	31.52	6.60	58.76	38.12	74.00	54.00	-15.24	-15.88
7323	H	49.56	31.00	10.55	60.11	41.55	74.00	54.00	-13.89	-12.45

Operation Mode: TX Mode (High)										
2480	V	82.19	38.32	0.34	82.53	38.66	114.00	94.00	-31.47	-55.34
4960	V	53.10	31.89	6.89	59.99	38.78	74.00	54.00	-14.01	-15.22
7440	V	49.56	31.22	10.60	60.16	41.82	74.00	54.00	-13.84	-12.18

2480	H	82.18	38.82	0.34	82.52	39.16	114.00	94.00	-31.48	-54.84
4960	H	53.13	31.83	6.89	60.02	38.72	74.00	54.00	-13.98	-15.28
7440	H	49.31	31.05	10.60	59.91	41.65	74.00	54.00	-14.09	-12.35

Note: (1) All Readings are Peak Value and AV.
(2) Emission Level= Reading Level + Factor
(3) Factor= Antenna Gain + Cable Loss – Amplifier Gain
(4) Data of measurement within this frequency range shown " ---" in the table above means the reading of emissions are attenuated more than 10dB below the permissible limits.
(5) Measurement uncertainty : ±3.7dB.
(6) Horn antenna used for the emission over 1000MHz.

5. 20dB Bandwidth

5.1 Measurement Procedure

The 20dB bandwidth of the emission was contained within the frequency band designated which the EUT operated. The effects, if any, from frequency sweeping, frequency hopping, other modulation techniques and frequency stability over excepted variations in temperature and supply voltage were considered, FCC Rule 15.215(c):

The antenna port of the EUT was connected to the input of a spectrum analyzer. Analyzer RBW was chosen so that the display was a result of the hopping channel modulation. For each RF output channel investigated, the spectrum analyzer center frequency was set to the channel carrier. Use the spectrum 20dB down delta function to measure the bandwidth.

5.2 Test SET-UP (Block Diagram of Configuration)

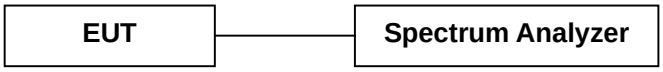

5.3 Measurement Results

Refer to attached data chart.

RBW:	30KHz	VBW:	100KHz
Spectrum Detector:	PK	Temperature :	22 ℃
Test By:	Sance	Humidity :	54 %
Test Result:	PASS	Test Date :	May 27, 2019

Channel frequency (MHz)	20dB Down BW(kHz)
2408	1163
2440	1796
2474	2054

Lowest Channel

Middle Channel

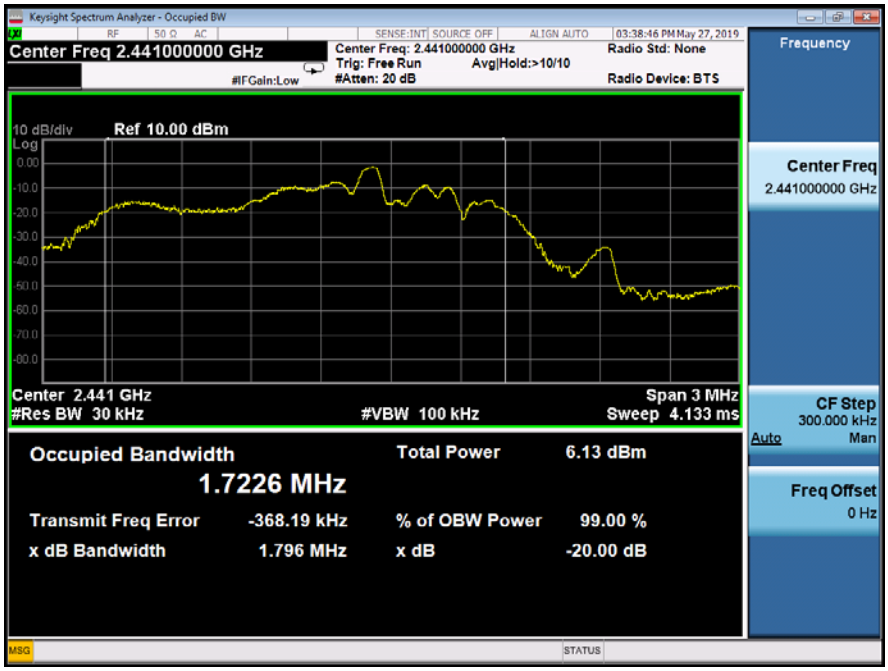

Highest Channel

6. Band Edge

6.1 Measurement Procedure

Same as Radiated Emission Test.

6.2 Limit

Emissions radiated outside of the specified frequency bands, except for harmonics, shall be attenuated by at least 50 dB below the level of the fundamental or to the general radiated emission limits in §15.209, whichever is the lesser attenuation.

6.3 Measurement Results

Operation Mode:	TX Mode	Test Date :	May 20, 2019
Temperature :	21 ℃	Humidity :	55 %
Test Result:	PASS	Test By:	Sance
Measured Distance:	3m		

Freq. (MHz)	Ant.Pol. (H/V)	Reading Level(dBuV)		Factor (dB/m)	Emission Level (dBuV)		Limit 3m (dBuV/m)		Margin (dB)	
		PK	AV		PK	AV	PK	AV	PK	AV
2390.000	H	48.19	36.30	0.09	48.28	36.39	74.00	54.00	-25.72	-17.61
2390.000	V	48.40	36.32	0.09	48.49	36.41	74.00	54.00	-25.51	-17.59
2483.500	H	51.23	32.92	0.34	51.57	33.26	74.00	54.00	-22.43	-20.74
2483.500	V	48.17	32.48	0.34	48.51	32.82	74.00	54.00	-25.49	-21.18

Note: (1) Emission Level= Reading Level + Factor
(2) Factor= Antenna Gain + Cable Loss – Amplifier Gain
(3) Horn antenna used for the emission over 1000MHz.

Low channel

Horizontal

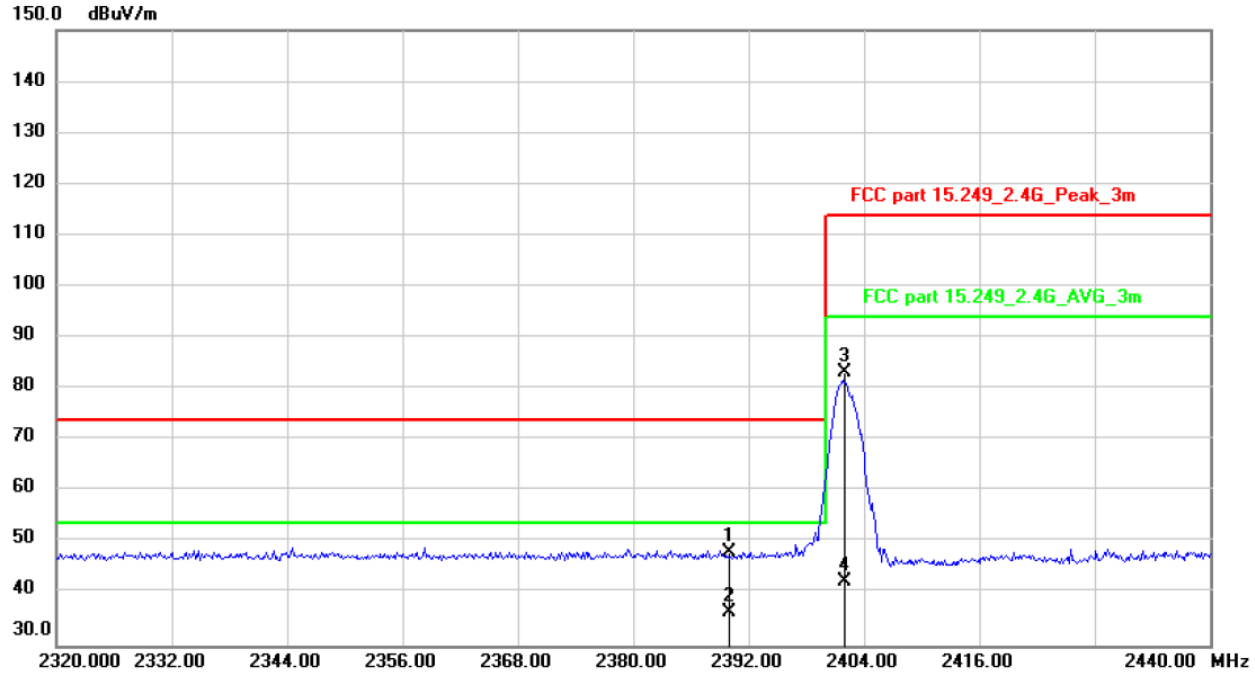

Vertical

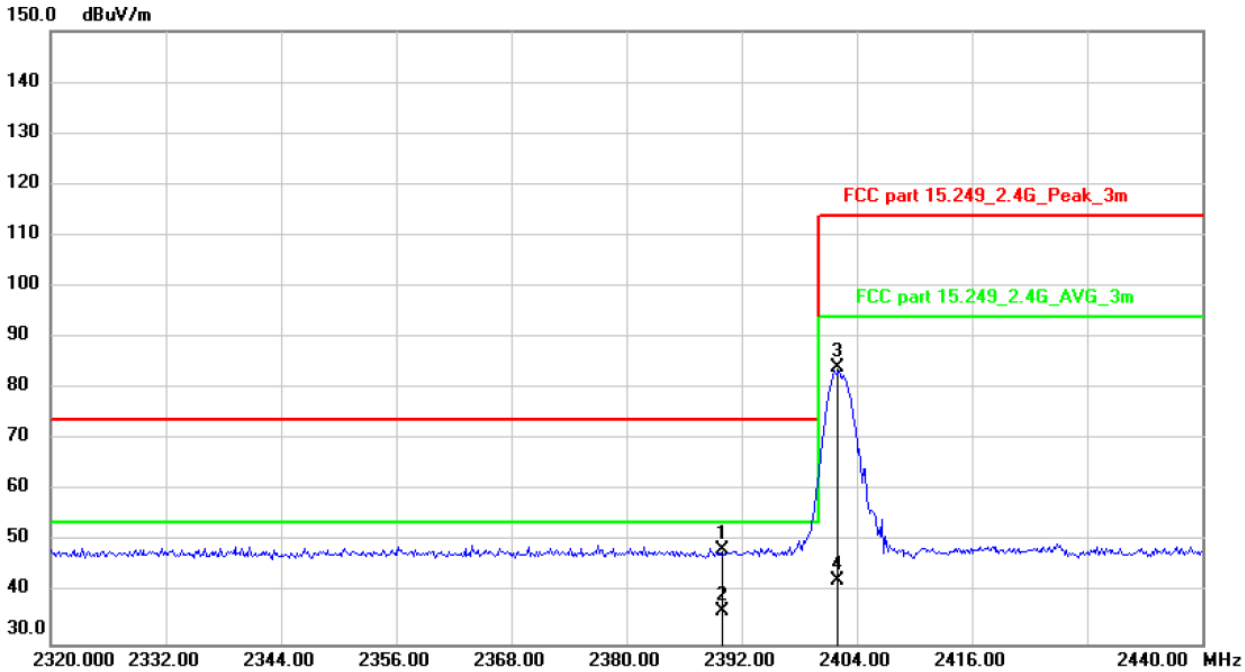

High channel

Horizontal

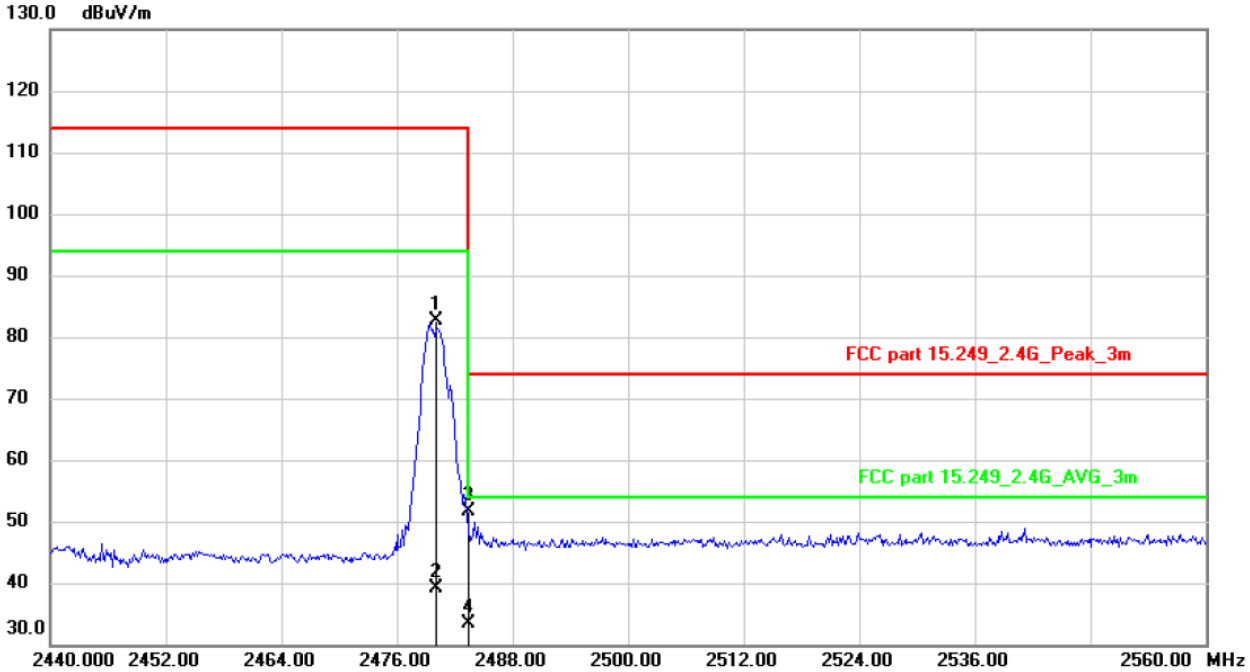

Vertical

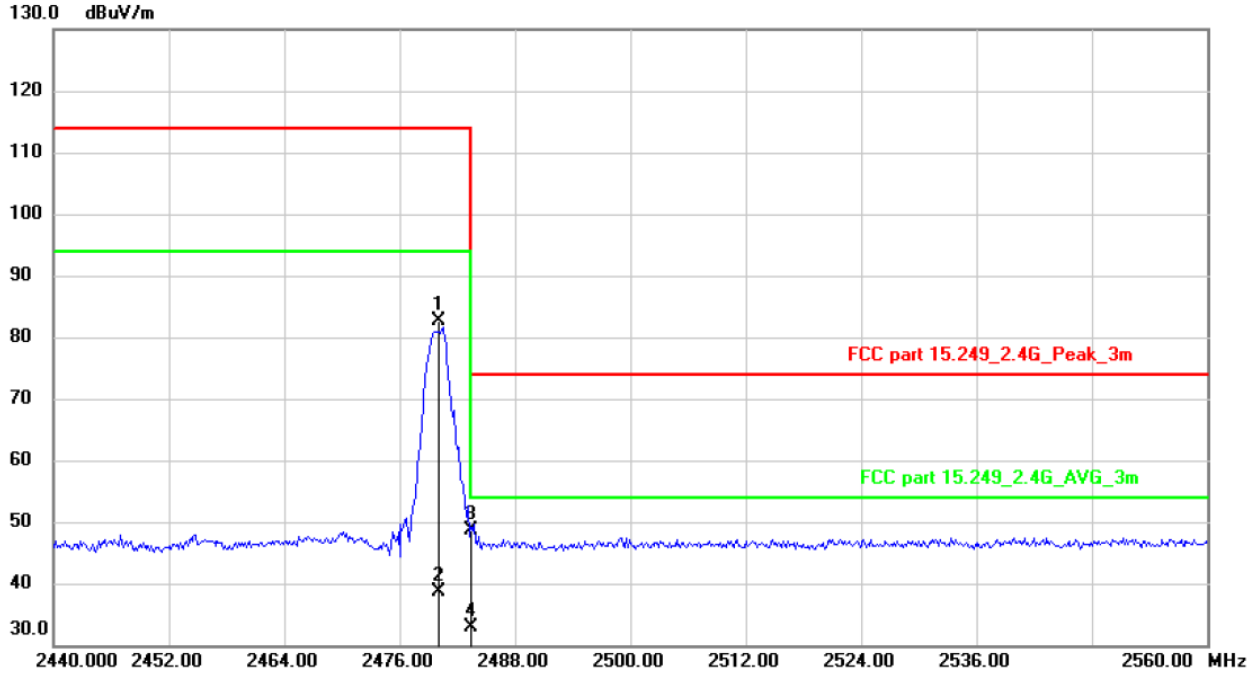

7. Antenna requirement

7.1 Measurement Procedure

According to of FCC part 15C section 15.203:

An intentional radiator shall be designed to ensure that no antenna other than that furnished by the responsible party shall be used with the device. The use of a permanently attached antenna or of an antenna that uses a unique coupling to the intentional radiator, the manufacturer may design the unit so that a broken antenna can be replaced by the user, but the use of a standard antenna jack or electrical connector is prohibited.

Systems operating in the 2400-2483.5MHz band that are used exclusively for fixed, point-to-point operations may employ transmitting antennas with directional gain greater than 6dBi provided the maximum peak output power of the intentional radiator is reduced by 1dB for every 3dB that the directional gain of the antenna exceeds 6dBi.

7.2 Measurement Results

The antenna is PCB antenna and no consideration of replacement, and the best case gain of the antenna is 2 dBi. So, the antenna is consider meet the requirement.

8. Test Equipment List

No.	Equipment	Manufacturer	Model No.	Serial No.	Characteristics	Last Cal.	Cal. Interval
1.	Test Receiver	Rohde & Schwarz	ESCI7	100837	9KHz~7GHz	Mar. 14, 2019	Mar. 13, 2020
2.	Antenna	Schwarzbeck	VULB9162	9162-010	30MHz~7GHz	Mar. 23, 2019	Mar. 22, 2020
3.	Spectrum Analyzer	Rohde & Schwarz	FSU26	200409/026	20Hz~26.5GHz	Mar. 14, 2019	Mar. 13, 2020
4.	Spectrum Analyzer	Keysight	N9020A	MY54200831	20Hz~26.5GHz	Apr. 24, 2019	Apr. 23, 2020
5.	Spectrum Analyzer	Rohde & Schwarz	FSV40	101003	10Hz~40GHz	Apr. 24, 2019	Apr. 23, 2020
6.	Horn Antenna	Schwarzbeck	BBHA9170	9170-372	15GHz~40GHz	Mar. 23, 2019	Mar. 22, 2020
7.	Pre-Amplifier	EMCI	EMC 184045	980102	18GHz~40GHz	Apr. 24, 2019	Apr. 23, 2020
8.	Power Sensor	DARE	RPR3006W	15I00041SNO64	100MHz~6GHz	Mar. 14, 2019	Mar. 13, 2020
9.	Communication Tester	Rohde & Schwarz	CMW500	149004	70MHz~6GHz	Mar. 14, 2019	Mar. 13, 2020
10.	Horn Antenna	COM-Power	AH-118	071078	500MHz~18GHz	Mar. 23, 2019	Mar. 22, 2020
11.	Pre-Amplifier	HP	HP 8449B	3008A00964	1GHz~26.5GHz	Mar. 14, 2019	Mar. 13, 2020
12.	Pre-Amplifier	HP	HP 8447D	1145A00203	100KHz~1.3GHz	Mar. 14, 2019	Mar. 13, 2020
13.	Loop Antenna	Schwarzbeck	FMZB 1513	1513-272	9KHz~30MHz	Apr. 24, 2019	Apr. 23, 2020
14.	Temperature & Humidity Chamber	REMAFEE	SYHR225L	N/A	-40~150℃	Apr. 24, 2019	Apr. 23, 2020
15.	DC Source	MY	MY8811	N/A	0~30V	Mar. 23, 2019	Mar. 22, 2020
16.	Temporary antenna connector	TESCOM	SS402	N/A	9KHz~25GHz	N/A	N/A
17.	Test Receiver	Rohde & Schwarz	ESCI	101152	9KHz~3GHz	Mar. 14, 2019	Mar. 13, 2020
18.	L.I.S.N	Rohde & Schwarz	ENV 216	101317	N/A	Mar. 14, 2019	Mar. 13, 2020
19.	L.I.S.N	Schwarzbeck	NNLK8129	8129212	N/A	Mar. 07, 2019	Mar. 06, 2020
20.	RF Switching Unit	Compliance Direction Systems Inc.	RSU-M2	38311	N/A	Mar. 14, 2019	Mar. 13, 2020
21.	Test Software	EZ	EZ_EMC	N/A	N/A	N/A	N/A

Note: The temporary antenna connector is soldered on the PCB board in order to perform conducted tests and this temporary antenna connector is listed in the equipment list.

---End---