SBM-2715-C2

Bluetooth Specification 5.0 Module

Data Sheet _ Preliminary Specification

Class 1 / BDR

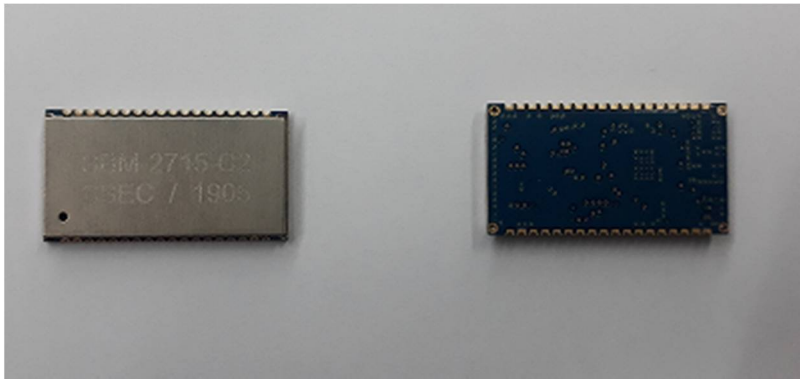

Applications

- Base Station
- Repeater
- Navigations
- Automotive

It is a Bluetooth module that is equipped with other complete products.

FCC Compliance Statement

This device complies with part 15 of the FCC rules. Operation is subject to the following two conditions: (1) This device may not cause harmful interference, and (2) this device must accept any interference received, including interference that may cause undesired operation.

FCC Interference Statement

This equipment has been tested and found to comply with the limits for a Class B digital device, pursuant to part 15 of the FCC Rules. These limits are designed to provide reasonable protection against harmful interference in a residential installation. This equipment generates, uses and can radiate radio frequency energy and, if not installed and used in accordance with the instructions, may cause harmful interference to radio communications. However, there is no guarantee that interference will not occur in a particular installation. If this equipment does cause harmful interference to radio or television reception, which can be determined by turning the equipment off and on, the user is encouraged to correct the interference by one of the following measures:

• Reorient or relocate the receiving antenna.

• Increase the separation between the equipment and receiver.

• Connect the equipment into an outlet on a circuit different from which the receiver is connected.
• Consult the dealer or an experienced radio/TV technician for help.

FCC Caution

Any changes or modifications not expressly approved by the party responsible for compliance could void the user's authority to operate this equipment. This transmitter must not be co-located or operating in conjunction with any other antenna or transmitter.

FCC Radiation Exposure Statement

This equipment complies with FCC radiation exposure limits set forth for an uncontrolled environment. This equipment should be installed and operated with minimum distance 20 cm between the radiator and your body. This transmitter must not be co-located or operating in conjunction with any other antenna or transmitter.

The FCC ID and Label shall be permanently affixed in the rear side of the equipment.

Revision history

No.	Date	Description	Remark
1	2019.03.04	First issue	

Content

1. Application scope.....5

2. Product composition.....5

3. Basic features.....5

4. Electrical features.....6

4.1. Recommended operating range.....6

4.2. Power consumption range.....6

5. UART Interface.....6

6. Reset Interface.....7

7. Dimensions.....7

8. Pin Assignment.....8

9. Application Schematic.....9

10. Product Test Procedure 10

10.1. Test Program.....10

10.2. AT Commends.....11

10.3 Air Test (Host Test) 12

11. RF Specifications.....15

11.1. Basic rate Transmitter performance.....15

11.2. Basic rate Receiver performance.....15

11.3. Antenna Information.....16

11.4. Antenna Assembling.....17

12. Packaging specification.....18

13. Certifications.....19

1. Application scope

SBM-2715-C2 meets the Bluetooth Specifications 5.0 and is capable of bi-directional communication by using SPP (Serial Port Profile). Applications are base station, repeater, navigation, automotive high-speed broadband, remote meter reading equipment, IoT, industrial automation equipment etc.

2. Product composition

SBM-2715-C2 is consist of Band Pass Filter, Crystal, Bluetooth 5.0 Chipset, 32M Memory etc.

Antenna Frequency: 2402MHz ~ 2480MHz

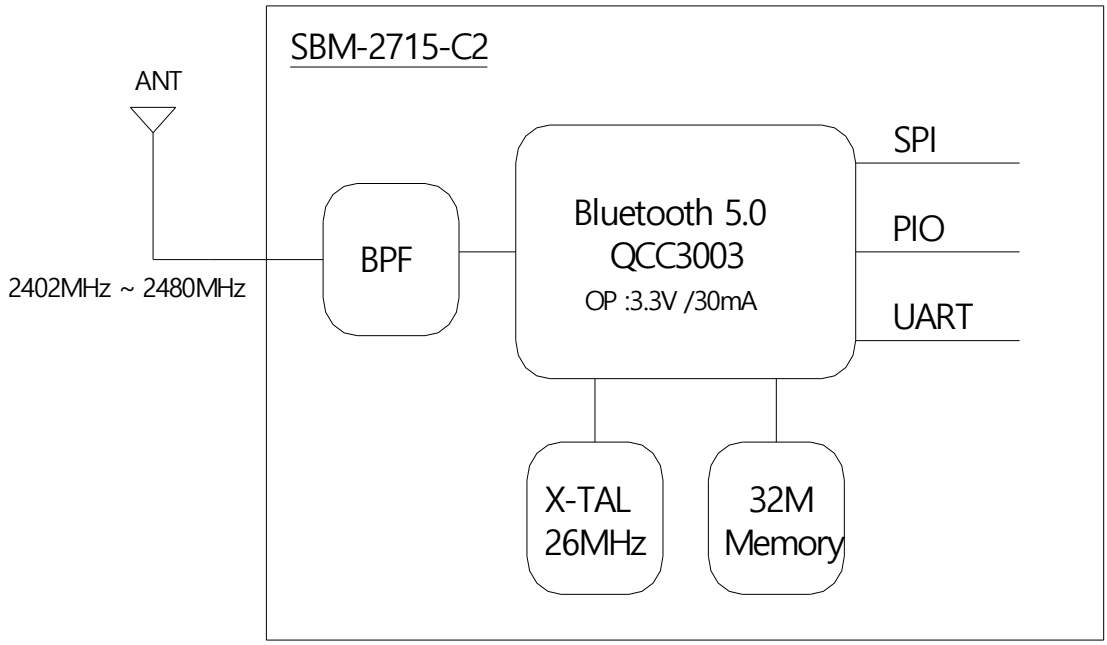

3. Basic features

- Qualcomm Bluetooth 5.0 Chipset
- 32M Serial Flash Memory
- Output Transmit Power: + 6.64 [dBm] MAX
- Sensitivity: -85 [dBm]
- Profile: SPP (Serial Port Profile)
- Size: 27mm x 15mm x 3.0 Max (shield case 포함)
- Operating Temperature: -40[℃] ~ +85[℃]

4. Electrical features

4.1. Recommended operating range

Ratings	Specifications				
	Min	Typical	Max	Unit	Conditions
VCC	3.0	3.3	3.6	V ⎓	
PVCC	-	-	-	V ⎓	
UART	3.0	3.3	3.6	V ⎓	
Operating Temperature	-40	+25	+85	℃	

4.2. Power consumption range

	Specifications			
Operating Mode	UART Rate (bps)	Max	Unit	Conditions
Inquiry and Page Scan	115200	30	mA	
Connected	115200	25	mA	

5. UART Interface

- Baud Rate: 115200 [bps]
- Flow Control: None
- Parity: None
- Number of stop bit: 1
- Bit per Channel: 8

6. Reset Interface

■ Power On Reset

■ A reboot function is also available under software control (AT Commend: ATZ)

■ Automatic reset protection

☞ Qualcomm Bluetooth Chipset applied to SBM-2715-C2 includes automatic protection circuit. When an unexpected event occurs (ex, ESD Strike) 'Reset protection circuit' resets the module and is capable of restoring the previous operation by activating the program.

7. Dimensions

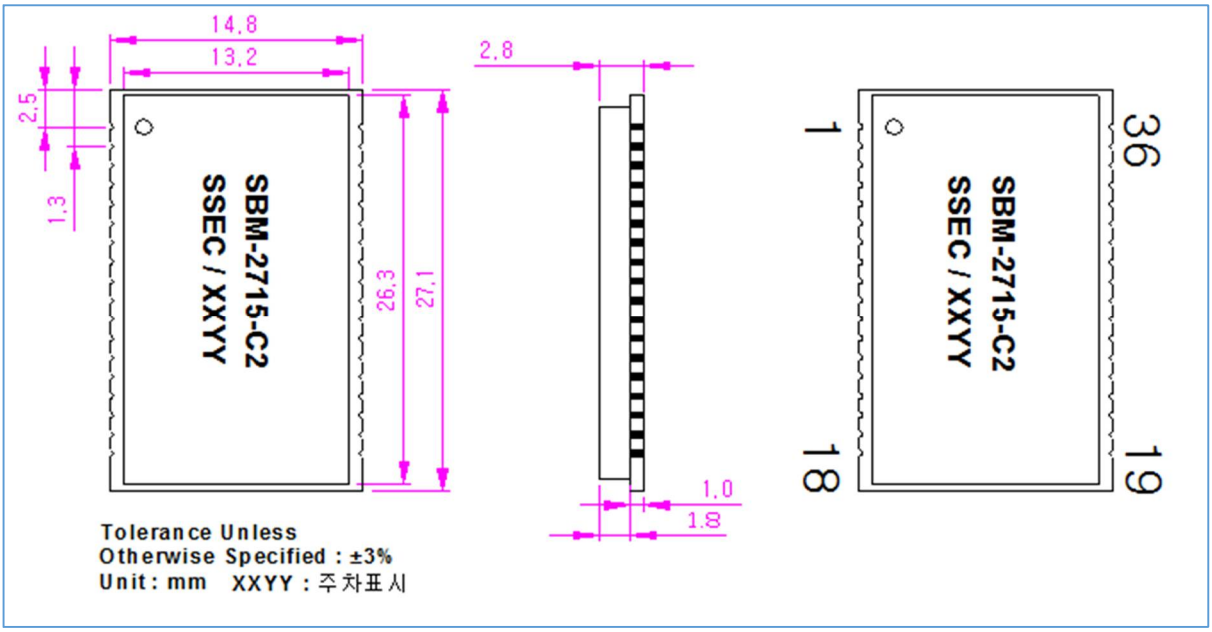

8. Pin Assignment

No.	Name	In/Out	Voltage	Specifications
1,	GND	-	-	Ground
2	GND	-	-	Ground
3	NC	-	-	N/A
4	NC	-	-	N/A
5	NC	-	-	N/A
6	NC		-	N/A
7	UART_RX	In	+3.3[V]	UART data input
8	UART_TX	Out	+3.3[V]	UART data output
9	NC	-	-	N/A
10	NC	-	-	N/A
11	NC	-	-	N/A
12	NC	-	-	N/A
13	NC	-	-	N/A
14	NC	-	-	N/A
15	NC	-	-	N/A
16	+3.3[V]	In	+3.3[V]	Main Power Supply
17	GND	-	-	Ground
18	NC	-	-	N/A
19	GND	-	-	Ground
20	SPI_MOSI	-	-	N/A
21	SPI_CLK	-	-	N/A
22	SPI_CSB	-	+1.8[V]	N/A
23	SPI_MISO	-	-	N/A
24	NC	-	-	N/A
25	NC	-	-	N/A
26	NC	-	-	N/A
27	NC	-	-	N/A
28	NC	-	-	N/A
29	NC	-	-	N/A
30	NC	-	-	N/A
31	NC	-	-	N/A
32	NC	-	-	N/A
33	NC	-	-	N/A
34	GND	-	-	N/A
35	GND	-	-	N/A
36	RF_IO	In/Out	-	Transmitter Output / Receiver Input

☞In order to reset, there are two ways. 'Power on reset' and 'ATZ Software reset'

☞ ATZ Software reset does not work during blue-tooth data communication, but only in paring standby.

9. Application Schematic

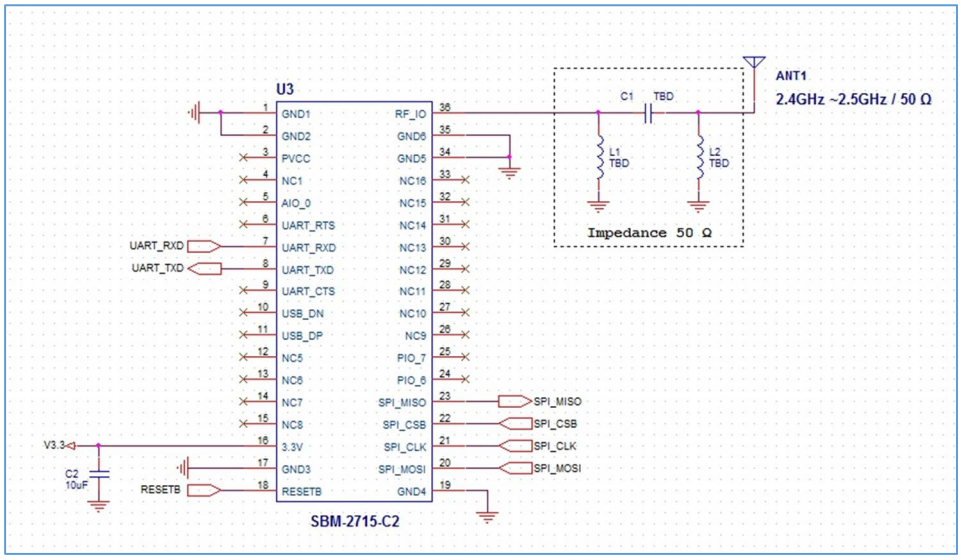

☞ The antenna Frequency is in the range of 2.4GHz to 2.5GHz

☞ The antenna gain is Max 5 dBi

☞ The antenna line impedance is designed to be 50 Ω

☞ An impedance matching stage is designed between the RF output and the antenna input

☞ The +3.3V Supply is recommended a 10uF

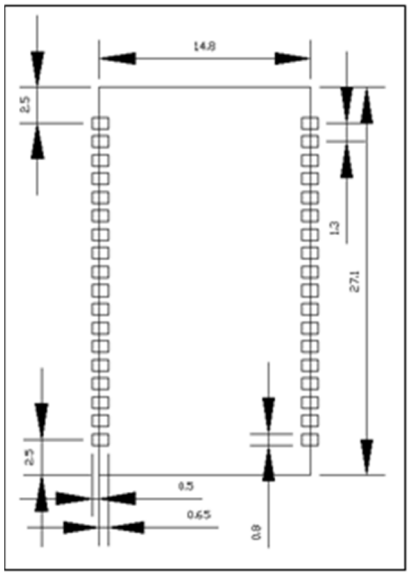

[PCB Recommend Pad Guide]

10. Product Test Procedure

10.1. Test Program

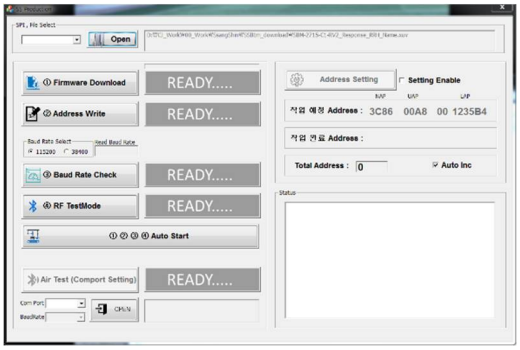

☞ Run the test program on the computer.

☞ Press the "auto start" button for ①~④ items.

☞ Connect the Bluetooth Tester(TC-300C) for ④ RF test mode.

10.2. AT Commends

10.2.1. +++

Response	OK
Purpose	Convert the operation status of Connect to Standby

10.2.2. AT+BTCANCLE

Response	OK
Purpose	Terminate the current executing task

10.2.3. AT+BTNAME="RRH_NAME"

Response	OK
Purpose	Change Device Name

10.2.4. AT+CHPASS

Response	OK
Purpose	Change Password used in remote configuration mode

10.2.5. AT+BTMODE, 3

Response	OK
Purpose	Set operation Mode

10.2.6. ATZ

Response	OK
Purpose	Software Reset

10.3. Air Test (Host Test)

10.3.1. Device Search

☞ Search for the device from the PC you want to connect. The initial name of SBM-2715-C2 is RRH_NAME

10.3.2. Device Name and Pin code Change

If you send commends sequentially as shown in the example below, module sends a response.

When PC Bluetooth search is done again , Device name is Changed and search.

```
+++<CR>
AT+BTCANCEL<CR>
AT+BTNAME="SKT_5G_010"<CR>
AT+CHPASS=1234<CR>
AT+BTMODE,3<CR>
ATZ<CR>

  +++ OK
AT+BTCANCEL OK<LF>
AT+BTNAME OK 10<LF>
SKT_5G_010<LF>
AT+BTNAME OK 4<LF>
1234<LF>
 Change PassWord OK<LF>
AT+BTMODE OK 3 <LF><CR>
<LF>
OK<CR><LF>
UART OK<LF>
```

Paring in the searched module, enter the changes password as below

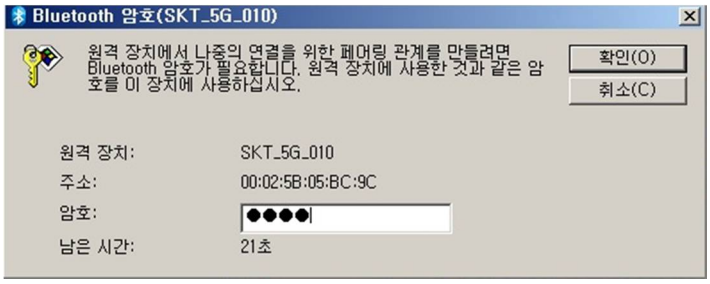

10.3.3. Paring complete

If you enter the changed password and click OK, Paring is completed.

10.3.4. Serial port connection

After the paring is completed, the PC performs service discovery and attempts to connect to the Serial port. When connection is completed, Com Port is created and it is ready for Bluetooth Communication. Make sure that the Bluetooth device used by the PC support SPP.

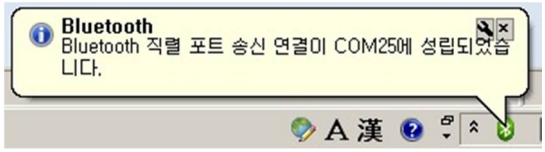

10.3.5. Data Bi-directional communication with serial port

When the serial port is connected and the com port created is matched with the data Communication speed, data is bi-directional.

After the serial port is connected, the AT commends will not work.

```
2019-02-17 18:55:12.931 [TX] -
abcdefghijklmn<CR>

2019-02-17 18:55:18.757 [RX] - AT<CR>

2019-02-17 18:55:20.731 [TX] -
abcdefghijklmn<CR>

2019-02-17 18:55:22.344 [RX] - AT<CR>

2019-02-17 18:55:23.976 [TX] -
abcdefghijklmn<CR>
```

[Module]

```
2019-02-17 18:55:12.948 [RX] -
abcdefghijklmn<CR>

2019-02-17 18:55:18.751 [TX] - AT<CR>

2019-02-17 18:55:20.751 [RX] -
abcdefghijklmn<CR>

2019-02-17 18:55:22.338 [TX] - AT<CR>

2019-02-17 18:55:23.995 [RX] -
abcdefghijklmn<CR>
```

[PC]

10.3.6. Delete Com port and Device

After the data communication is completed, Clear the serial Port / Paring from the PC and Deleted Device.

11. RF Specifications

11.1. Basic Rate Transmitter Performance

RF Characteristics		MIN	TYP	MAX	Bluetooth Specification	Unit
Maximum Transmit power		4	7	10	0 to 20	[dBm]
RF Power variation over temperature range			±1			[dB]
20 dB Bandwidth for modulated carrier			920	1000	≤1000	KHz
ACP	F=F0 ± 2MHz		-36	-20	≤-20	[dBm]
	F=F0 ± 3MHz		-42	-36	≤-40	[dBm]
	F=F0±>3MHz		-65	-40	≤-40	[dBm]
Δf 1avg Maximum modulation		140	165	175	140<Δf 1avg<175	KHz
Δf 2max Minimum modulation		115	142		≥115	KHz
Δf 2avg / Δf 1avg		0.8	0.9		≥0.8	-
ICFT		-75	5	75	±75	KHz
Drift rate			5	20	≤20	KHz/50us
Drift (Single slot packet)			6	25	≤25	KHz
Drift (five slot packet)			6	40	≤40	KHz
2nd harmonic content			-27			[dBm]
3rd harmonic content			-26			[dBm]

11.2. Basic Rate Receiver Performance

RF Characteristics	Frequency(GHz)	MIN	TYP	MAX	Bluetooth Specification	Unit
Sensitivity at 0.1 % BER for all basic rate Packet type	2.402		-82	-80	≤-70	[dBm]
	2.441		-87	-84		
	2.480		-87	-84		
Maximum received signal at 0.1% BER		-20	>-10	>-10	≥-20	[dBm]
Continuous power required to block Bluetooth reception (For input power of -67 dBm With 0.1% BER)	0.030-2.000	-10	>1		-10	[dBm]
	2.000-2.400	-27	-7		-27	
	2.500-3.000	-27	-6		-27	
	3.000-12.75	-10	>3		-10	
C/I-Co-channel			5	11	≤11	[dB]
Adjacent channel Selectivity C/I	F=F0+1MHz		-5	0	≤0	[dB]
	F=F0-1MHz		-3	0	≤0	
	F=F0+2MHz		-40	-30	≤-30	
	F=F0-2MHz		-32	-20	≤-20	
	F=F0-3MHz		-47	-40	≤-40	
	F=F0-5MHz		-48	-40	≤-40	
	F=F image		-31	-9	≤-9	
Maximum level of intermodulation interferers		-39	-15		≥-39	[dBm]
Spurious output level			-155			dBm / Hz

11.3. Antenna Information

Antenna No.	Frequency (MHz)	Connector Type	Max Antenna gain (dBi)	Impedance
1	2400~2483.5	SMA Male	3 dBi	50 ohms
2	2400~2500	SMA Male	5 dBi	50 ohms

☞ SMA Male connector antenna has been approved for the modular. RP-SMA female type is recommended for antenna connector. For situations where the host product manufacturer is responsible for an external connector, the integration instructions shall inform the installer that unique antenna connector must be used on the Part 15 authorized transmitters used in the host product.

☞ Antenna type is recommended RP-SMA male type / Omni direction / Dipole Antenna and gain 5 [dBi] Max

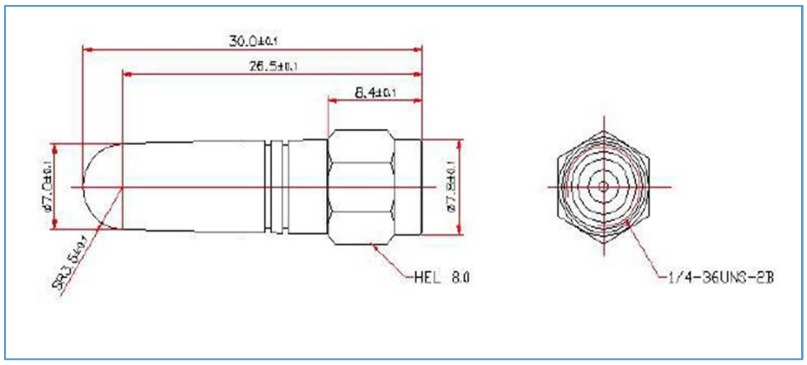

☞ Ground VIA is recommended around the RF I/O Pin line.

☞ PIFA Type Antenna Guide (PCB=FR4)

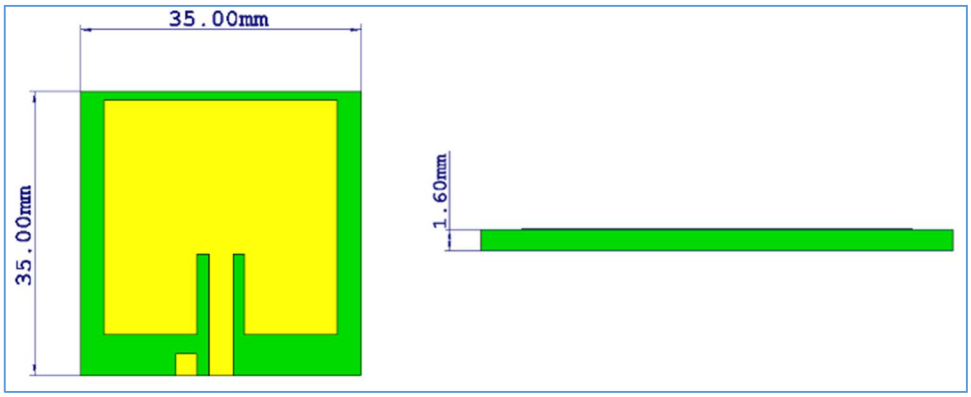

11.4. Antenna Assembling

Antenna used for the module should meet the mobile device requirements: The VSWR is less than 2.0 and the input impedance is 50 ohms Antenna should be well matched to achieve best performance in different application scenarios.

Antenna interface can be connected to SMA-RP male antenna, embedded planar inverted F antenna(PIFA). RF wires far away from all disturbing source, especially digital signals and DC/DC power if using RF wires.

The following methods are commonly used to assemble antenna;

-SMA-RP female connector

The following figure shows its encapsulation specifications.

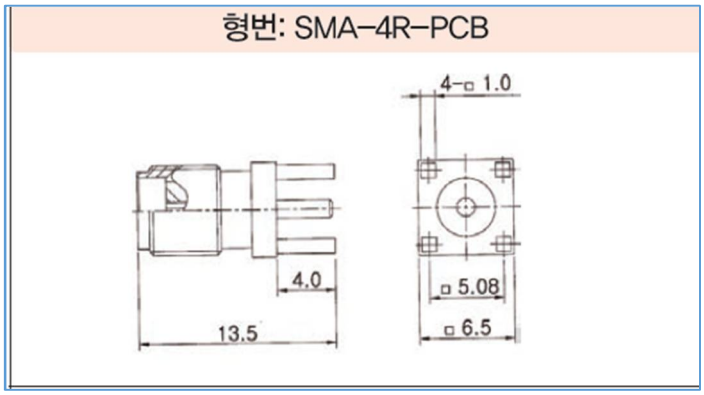

12. Packaging specification

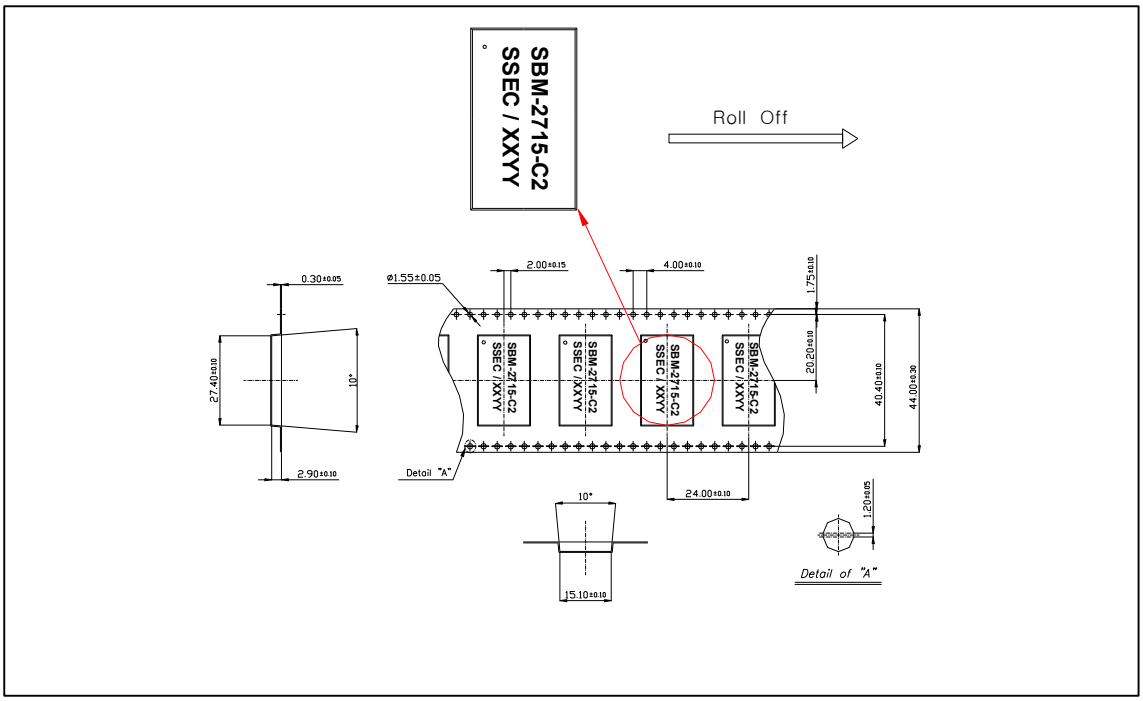

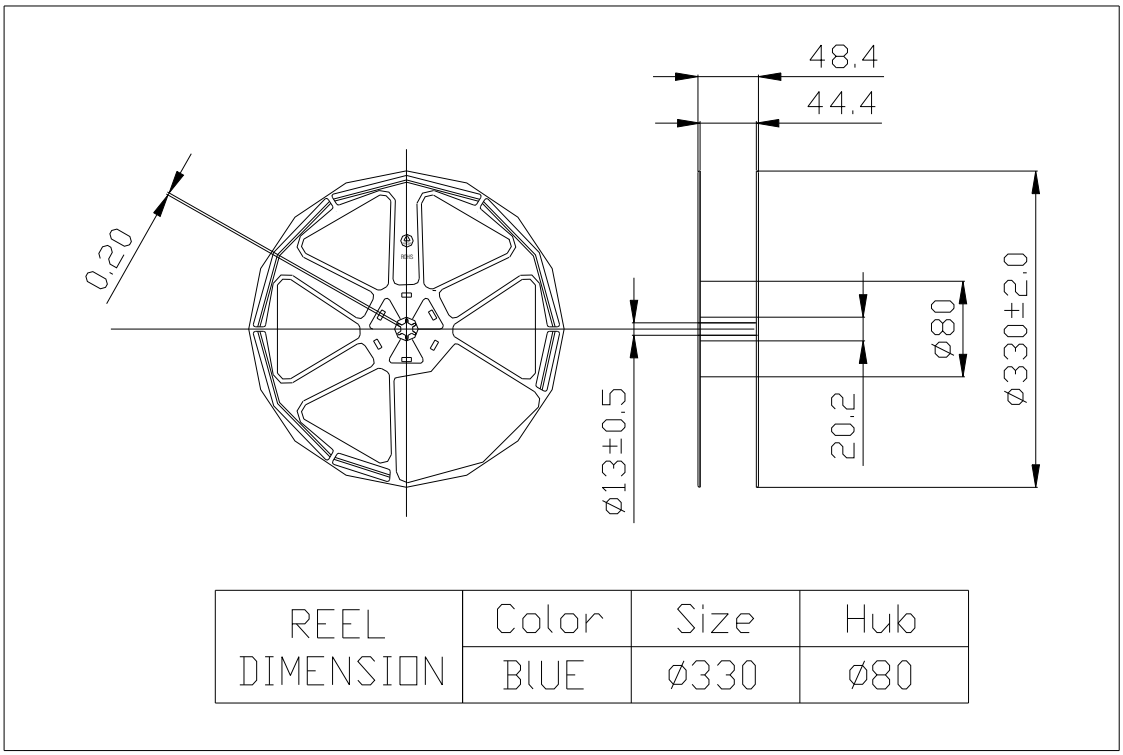

REEL DIMENSION	Color	Size	Hub
	BLUE	ø330	ø80

13. Certification

13.1. Bluetooth V5.0 (DID: D044470, QDID: 129612)

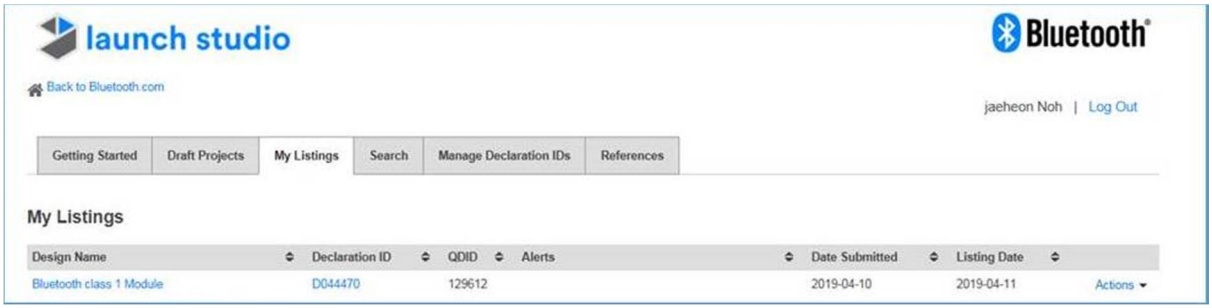

13.2. KC Certificate

DFCB-A474-D492-2319

방송통신기자재등의 적합인증서

Certificate of Broadcasting and Communication Equipments

상호 또는 성명 *Trade Name or Applicant*	쌍신전자통신 주식회사
기자재명칭(명칭) *Equipment Name*	특정소출력 무선기기(무선데이터통신시스템용 무선기기)
기본모델명 *Basic Model Number*	SBM-2715-C2
파생모델명 *Series Model Number*	
인증번호 *Certification No.*	R-C-7SE-SBM-2715-C2
제조자/제조국가 *Manufacturer/ Country of Origin*	쌍신전자통신 주식회사 / 한국
인증연월일 *Date of Certification*	2019-04-17
기타 *Others*	

위 기자재는 「전파법」 제58조의2 제2항에 따라 인증되었음을 증명합니다.

It is verified that foregoing equipment has been certificated under the Clause 2, Article 58-2 of Radio Waves Act.

2019년(Year) 04월(Month) 17일(Day)

국립전파연구원장 국립전파연구원장인

Director General of National Radio Research Agency

※ 인증 받은 방송통신기자재는 반드시 "적합성평가표시" 를 부착하여 유통하여야 합니다.
위반시 과태료 처분 및 인증이 취소될 수 있습니다.

13.3. CE(RED) Certificate

13.4. FCC Certificate.

13.4.1 List of applicable FCC Rules

This device complies with Part 15.247 and Part 15C of the FCC rules.

13.4.2 Label and compliance information

The FCC ID and Label shall be permanently affixed in the rear side of the equipment.

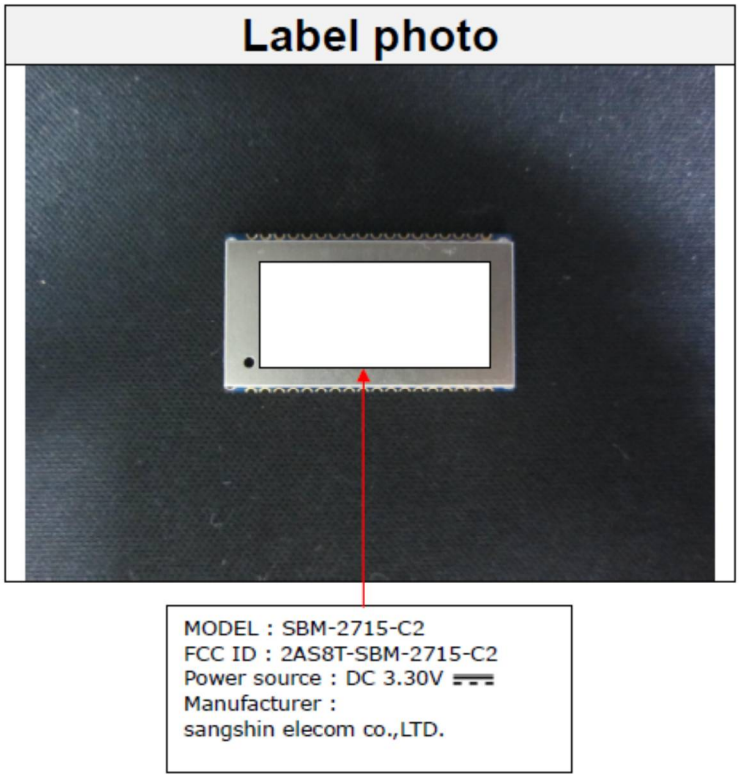

The final end product must be labeled in a visible area with the following: "Contains FCC ID: 2AS8T-SBM-2715-C2". The grantee's FCC ID can be used only when all FCC compliance requirements are met.

The FCC requires a label on the outside of the host system visible to the end user.

13.4.3 Additional Test, Part 15 subpart B disclaimer

The final host / module combination need to be evaluated against the FCC part 15B criteria for unintentional radiators in order to be properly authorized for operation as a Part 15 digital device.

The host integrator installing this module into their product must ensure that the final composite product complies with the FCC requirements by a technical assessment or evaluation to the FCC rules, including the transmitter operation and should refer to guidance in KDB 996369

The OEM integrator has to be aware not to provide information to the end user regarding how to install or remove this RF module in the user's manual of the end product which integrates this module.

The OEM integrator is responsible for additional system-level EMI/EMC and Product Safety testing and certification that applies in the U.S. and other countries to the host system containing the Module. This includes, but is not limited to, Federal Communications Commission ("FCC") Part 15 Class B Digital Emissions, China CCC, Taiwan BSMI, Korea KC, ETSI EN 301 489-1 and others.

These system-level EMC tests are to be done with the Module installed and included in the scope of the submission.

Some of the countries for which modular certifications are provided require additional submissions, authorizations or import permission by the system-vendor or importer. The integrator is responsible for these additional actions.