WIRELESS CHARGER W-2

DUAL CHARGING TECHNOLOGY

MOUNTING INSTRUCTION "UNDER FURNITURE TOP"

WIRELESS CHARGER W-2 + USB-EC-A2FS500-B/LI

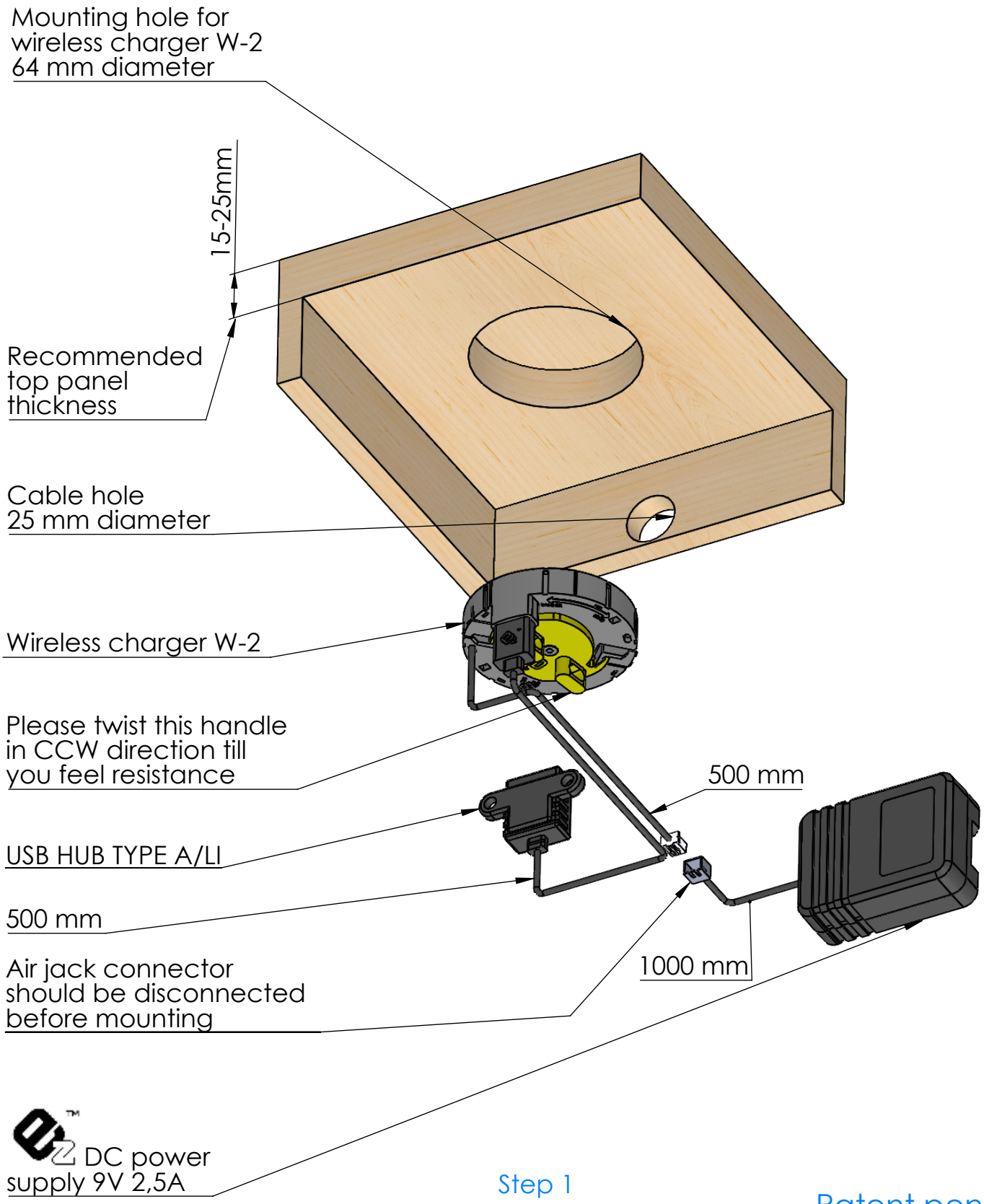

Step 1

Patent pending

WIRELESS CHARGER W-2

Install W-2 wireless charging device into prepared hole

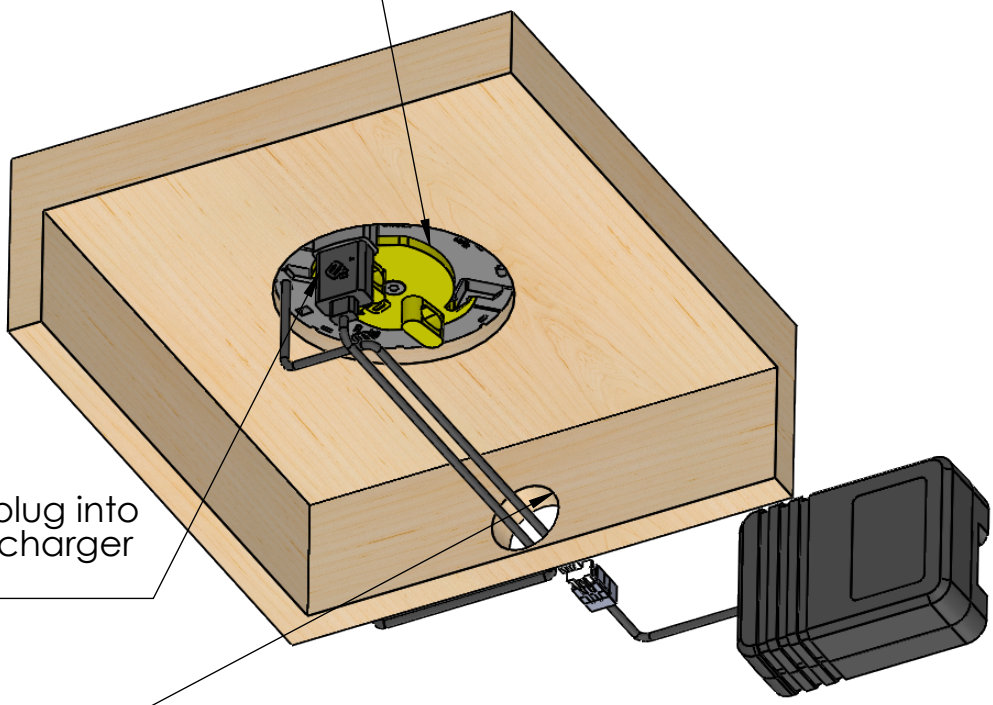

Connect USB plug into Wireless W-2 charger USB socket

Cable hole 25 mm diameter

Step 2

If wireless charger device fits properly to the hole and you feel that device can not be pushed deeper please twist this part in CW direction to lock

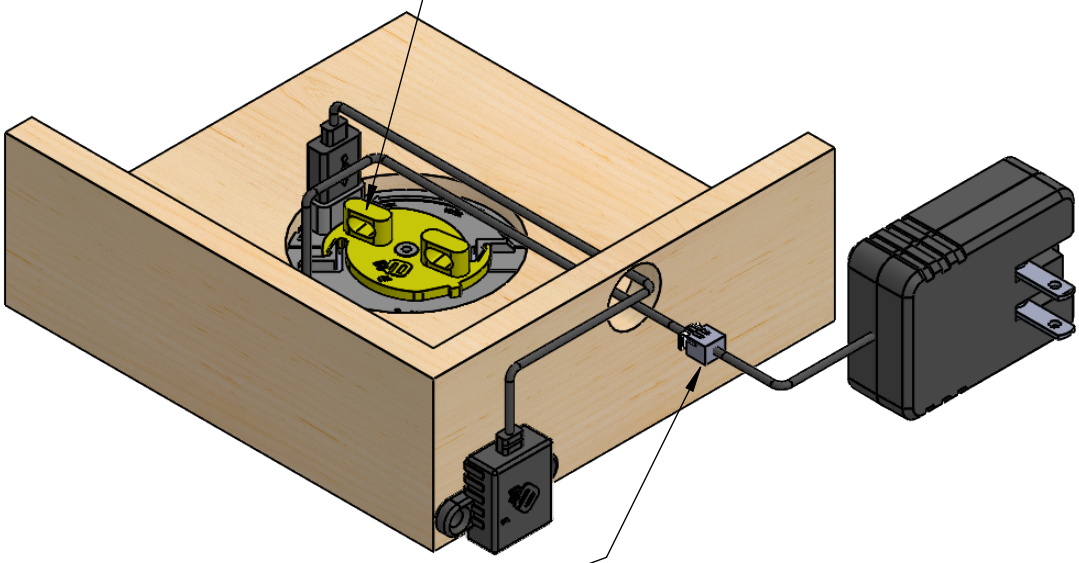

Connect air jack connector after mounting in furniture

Step 3

Patent pending

WIRELESS CHARGER W-2

Locker should look like picture shown when in the closed position

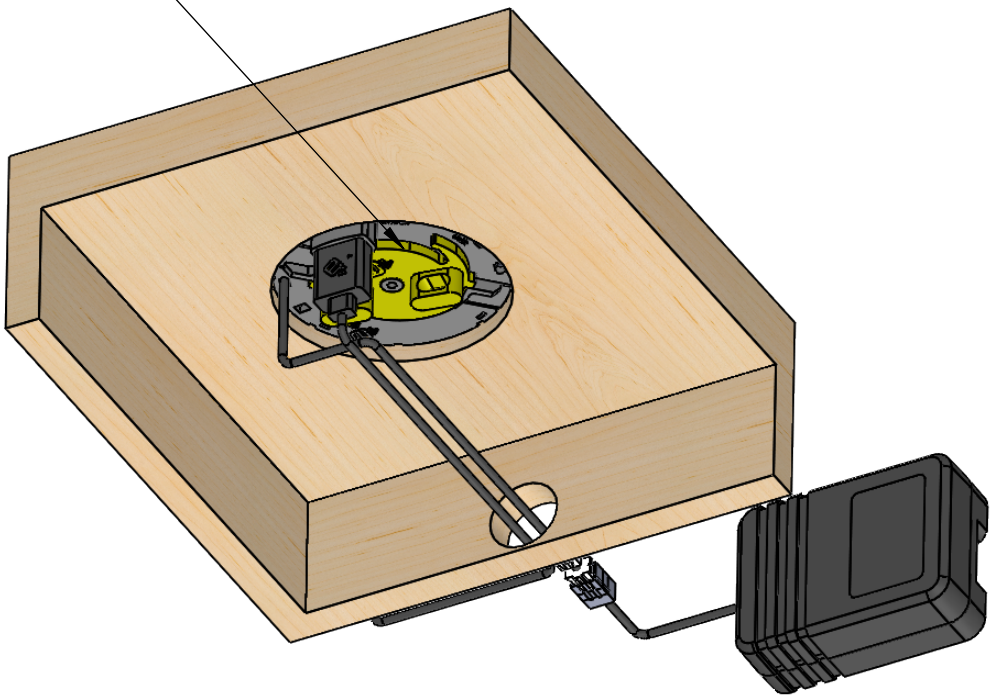

Step 4

Light description:
-One blink at power on
-Constant lighting when Wireless charger is charging phone.
-The green light disappears when phone is charged fully.
-Constant blinking-error

Mounted properly W-2 wireless charger

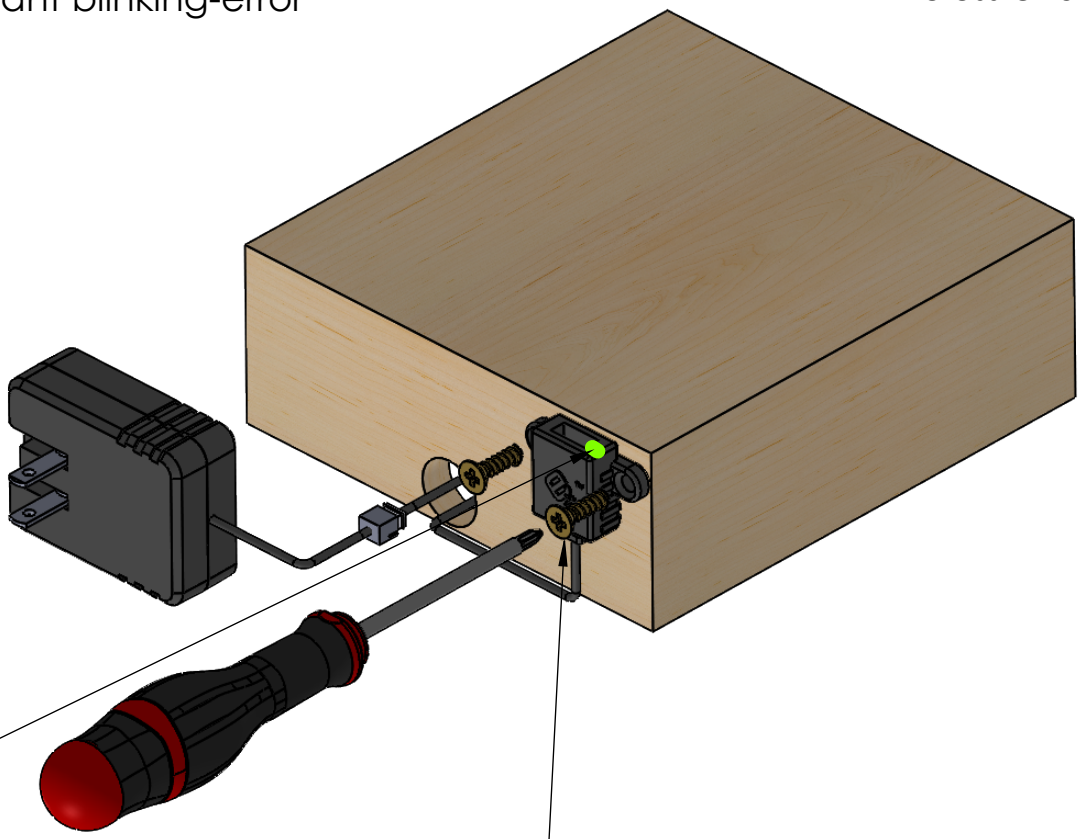

Screw in the USB HUB using a Philips screwdriver, using the screws provided

Step 5

Patent pending

1. Changes or modifications not expressly approved by the party responsible for compliance could void the user's authority to operate the equipment

2. Note: This equipment has been tested and found to comply with the limits for a Class B digital device, pursuant to part 15 of the FCC Rules. These limits are designed to provide reasonable protection against harmful interference in a residential installation. This equipment generates, uses and can radiate radio frequency energy and, if not installed and used in accordance with the instructions, may cause harmful interference to radio communications. However, there is no guarantee that interference will not occur in a particular installation. If this equipment does cause harmful interference to radio or television reception, which can be determined by turning the equipment off and on, the user is encouraged to try to correct the interference by one or more of the following measures:

—Reorient or relocate the receiving antenna.

—Increase the separation between the equipment and receiver.

—Connect the equipment into an outlet on a circuit different from that to which the receiver is connected.

—Consult the dealer or an experienced radio/TV technician for help.

3. This device complies with part 15 of the FCC Rules. Operation is subject to the following two conditions: (1) This device may not cause harmful interference, and (2) this device must accept any interference received, including interference that may cause undesired operation.

1. Power transfer frequency is less than 1 MHz.
2. Output power from each primary coil is 5 watts.
3. The transfer system includes only single primary and secondary coils.
4. Client device is placed directly in contact with the transmitter
5. Product is not a portable device.
6. The aggregate H-field strengths at 15 cm surrounding the device and 20 cm above the top surface from all simultaneous transmitting coils are demonstrated to be less than 50% of the MPE limit (i.e.: 1.63A/m / 2 = 0.815 A/m).Please see the MPE assessment report(Report number:190102004SHA_002)