chime

The Chai Brewer

Instruction Booklet

CCB007AA

Contents

Know your Chime..... 3

Important Safeguards..... 5

How to operate Chime..... 11

How to care and clean Chime..... 12

Troubleshooting..... 13

Know Your Chime

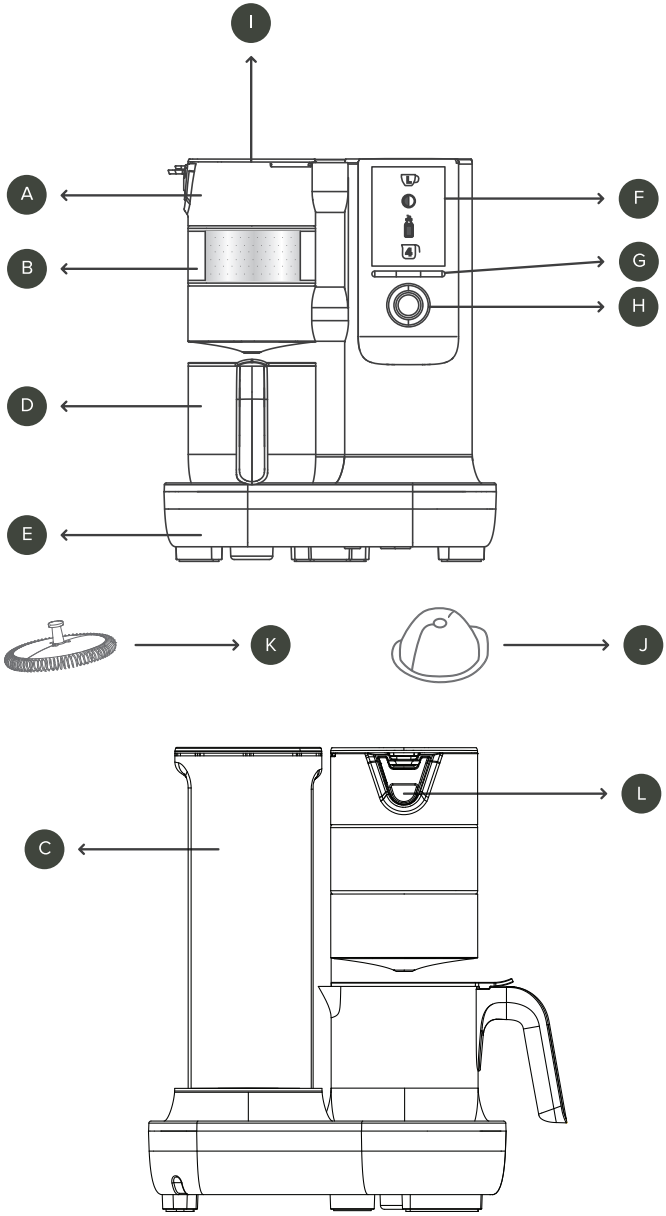

Know Your Chime

A **Top Tea Brewer**
This is where tea is extracted. Inside the Tea brewer is (B) Stainless Steel Sieve and Cap holder.

B **Stainless Steel Sieve**
To hold tea leaves and spices before and after extraction.

C **Water Tank**
To hold up to 10 regular cups of water.

D **Milk Carafe**
To hold and heat milk. It has a removable frother inside

E **Base of the brewer.**

F **LCD screen that shows configurations and menu for control.**

G **Three Push Buttons to access menu and other functions of the brewer**

H **Start / Select Push Dial.**
Rotate the dial to browse cup size, strength, milk ratio, and frothiness settings. Push the center of the dial to select desired configuration.

I **Top lid of the tea brewer.**
Can be opened by pushing the button situated on the side of the top brewer. Inside is the Cap holder where you place the Cap.

J **Recyclable Caps**
The Chime Recyclable Caps hold premium Assam tea and spices in various combinations. It is opened by closing the Top Lid (I), that also pushes the tea and spices in the Stainless Steel Seive (B)

K **Magnetic Frothing Disc.**
It is mechanically attached to the inside bottom of the (D) Milk Carafe.

L **Push Button**
Use it to open the top lid of the tea boiler.

Important Safeguards

Chime is designed and manufactured keeping safety as the foremost priority. In addition, we ask that you use Chime with care and adhere to the following precautions.

This product is an ISM device that complies with Part 18 of the FCC rules and with Canadian ICES-0001

READ ALL INSTRUCTIONS

- Carefully read all instructions before operating the appliance for the first time and save for future reference.
- Remove and safely discard any packaging materials and promotional labels before using the appliance for the first time.
- To eliminate a choking hazard for young children, remove and safely discard the protective cover fitted to the power plug of this appliance.
- To protect against electrical shock, do not immerse the power cord, power plug or base of the product in water or any liquid, or allow any moisture to come into contact with these parts.
- Do not place the brewer near the edge of a bench or table during operation.
- Do not place the brewer on or near a hot gas or electric burner, or where it could touch any other sources of heat.
- Do not use on a sink drain board.
- Always use the brewer on a dry and leveled surface.
- Keep the brewer clear of walls, curtains and other heat or steam sensitive materials.
- Provide adequate space above and all sides for air circulation around the appliance.
- Unwind the power cord fully before use.
- Do not allow the power cord to hang over the edge of the table or the counter, touch hot surfaces or become knotted.
- This brewer is not intended to be operated by any means of an external time or separate remote control system.
- Do not touch hot surfaces, i.e. (D) Milk Carafe, Tea brewer glass surface, SS Sieve. Use handles or knobs.
- The appliance has been designed specifically for the purpose of foaming milk and other dairy milk alternatives and is not intended to whip, thicken or heat other food substances, e.g. oil, eggs, butter, heavy whipping cream, soups, gravies etc.
- The appliance is not designed to mix a large quantity of dry ingredients or melt large food pieces e.g. cubed chocolate, ground nuts, whole spices, fresh herbs, ice cubes, etc.

Important Safeguards

- The underside of the (D) Milk Carafe must always be clean and dry before placing onto the induction power base.
- Attach the (D) Milk Carafe lid securely to the carafe before operation. Do not remove the (D) Milk Carafe lid during operation.
- Use caution when pouring foamed milk or chai beverage from the (D) Milk Carafe as the carafe and hot milk may scald.
- Do not operate the brewer without liquid on the (A) Top Tea Brewer. If you have configured to have milk in the milk frother, you must have appropriate milk in the (D) Milk Carafe.
- The (D) Milk Carafe must only be used with the power base provided. Do not use attachments other than those provided with the appliance as it may result in fire, electric shock or injury to persons.
- Do not put metal or similar items into the (D) Milk Carafe as this may damage or affect the operation of the appliance.
- To disconnect press the X button to make sure the tea brewer or milk frother is not operational. (There should be no flashing lights around the control knob), then remove the plug from the power outlet.
- Always remove the plug from the power outlet and allow to cool if the appliance is not in use, before attempting to move the appliance, before cleaning, disassembling, assembling and when storing the appliance.
- Keep the appliance and accessories clean. Strictly follow the care and cleaning instructions described in this book.
- Do not use harsh abrasive, caustic cleaners or oven cleaners when cleaning the appliance, (D) Milk Carafe or any other accessories.
- This appliance is for household use only. Do not use this appliance for anything other than its intended purpose as described in the book. Do not use outdoors. Do not use in moving vehicles or boats.
- Do not leave the appliance unattended when in use.
- This appliance is not intended for use by young children or infirm persons without supervision. Young children should be supervised to ensure that they do not play with the appliance.
- Regularly inspect the power cord, power plug or actual appliance for any damage. Do not operate if damaged in any way or after the appliance malfunctions. Immediately cease use of the appliance and visit www.brewchime.com and send us an email for examination, repair or adjustment.
- For any other maintenance other than cleaning, visit www.brewchime.com and send us an email at info@brewchime.com.
- This appliance is equipped with a power cord having a grounding wire with a grounding plug. The appliance must be grounded using a 3-hole properly grounded outlet. In the event of an electrical short circuit, grounding reduces the risk of electrical shock.

Important Safeguards

- If the appliance is of the grounded type, the extension cord should be a grounding 3-wire cord.
- If the power outlet is a standard 2-prong wall outlet, it is your personal responsibility and obligation to have it replace with a properly grounded 3-prong wall outlet.
- Do not, under any circumstances, cut or remove the third (ground) prong from the power cord or use an adapter.
- Consult a qualified electrician if the grounding instructions are not completely understood, or if doubt exists as to whether the appliance is properly grounded.

WARNINGS

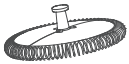

Always ensure the frothing disc is securely attached to the (D) Milk Carafe before use.

Frothing disc is a choking hazard. Children must always be supervised and never left unattended with the appliance.

Never immerse the power base, power cord or power plug in water or allow moisture to come into contact with these ports.

NOTE

This product has been tested and found to comply with the limits of ISM equipment. These limits are designed to provide reasonable protection against harmful interference in a residential installation. The product generates, uses, and can radiate radio frequency energy and, if not used in accordance with the instructions, may cause harmful interference to radio communications. There is no guarantee that interference will not occur in a particular installation.

Apart from general care & cleaning of the product, no maintenance of the radio frequency system is required. Changes or modifications to the product could void the user's authority to operate the equipment.

If this product does cause harmful interference to radio or television reception – which can be determined by turning the product off and on – the user is encouraged to correct the interference by one or more of the following measures:

- Reorient or relocate the product.
- Increase the separation between the product and the receiver.
- Connect the product into an outlet on a circuit different from that to which the receiver is connected.

For safety reasons it is recommended you plug your Chime brewer directly into its own electrical outlet on a dedicated circuit separate from other appliances. If electrical circuit is overloaded with other appliances, your appliance may not function properly. Use in conjunction with power strip or extension cord is not recommended.

SHORT CORD INSTRUCTIONS

Your Chime brewer is fitted with a short power supply cord as a safety precaution to prevent personal injury or property damage resulting from pulling, tripping or becoming entangled with a longer cord. Do not allow children to use or be near this appliance without close adult supervision. Longer detachable power supply cords or extension cords are not recommended but may be used if care is exercised. If an extension cord is used, (1) the marked electrical rating of the cord set or extension cord should be at least as great as the electrical rating of the appliance, (2) the cord should be arranged so that it will not drape over the countertop or tabletop where it can be pulled on by children or tripped over unintentionally, (3) the extension cord must include a 3-prong grounding plug.

FOR HOUSEHOLD USE ONLY. SAVE THESE INSTRUCTIONS.

How To Operate Chime

BEFORE FIRST USE

Before first use, ensure you have all parts and accessories, i.e. (D) Milk Carafe, (B) Stainless Steel Sieve, Chime Cap, (C) Water Tank filled with Water.

Remove and safely discard all promotional labels and packing materials attached to the Chime Chai Brewer.

Wash the (D) Milk Carafe, (B) Stainless Steel Sieve and (C) Water Tank with soap water, then rinse and dry thoroughly.

MAKING CHAI

Place Chime on a flat surface and plug the power cord in a 110-120V power outlet. The LCD screen will illuminate.

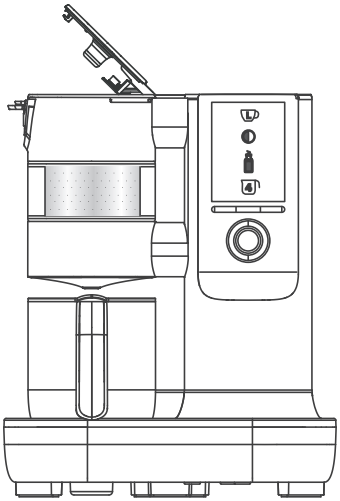

NOTE

After 120 seconds of non-use, Chime will enter standby mode as shown above. The screen will go dark and all functions will stop. To reactivate, turn the Start / Select push dial.

Step 1

FILL (C) WATER TANK

Fill the (C) Water Tank and insert it back. Filled (C) Water Tank can hold up to 10 cups of chai based on 50% milk / 50% water Large cup configuration. Results may vary depend on individual usage.

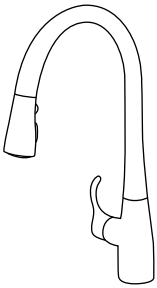

How To Operate Chime

Step 2

PLACE THE CHAI CAP IN THE POD HOLDER.

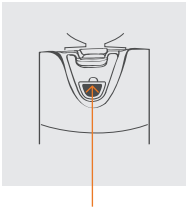

PRESS THE BUTTON

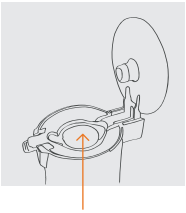

PLACE THE CAP (UPSIDE DOWN AND AS SHOWN) IN THIS AREA.

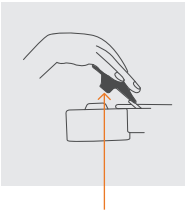

CLOSE THE TOP BREWER LID (I)

Step 3

SELECT YOUR CONFIGURATION.

Select the size of your cup. You can access configuration by rotating the Start/Select Push Dial. Options are Regular (8 oz, 250 ml) and Large (12 oz, 350 ml).

3.1 Select the size of your cup. You can access configuration by rotating the Start/Select Push Dial. Options are Regular (8 oz, 225 ml) and Large (12 oz, 350 ml).

3.2 Select the strength of your chai. This will affect the length of the brew cycle in the top tea boiler. The selection from left to right are low, medium and strong.

3.3 Select the ratio of Milk to water. The options from left to right are no milk, 25% milk, 50% milk, 75% milk.

3.4 Select frothiness of your beverage. Option is froth or no froth.

Step 4

POUR MILK IN THE (D) MILK CARAFE.

After selecting your recipe, based on your milk ratio selection, Chime will present a number, in this example it is 4. This number corresponds to the marked levels inside the (D) Milk Carafe. You need to fill the (D) Milk Carafe to this marking. Put the (D) Milk Carafe back in its place at the bottom and Press Go.

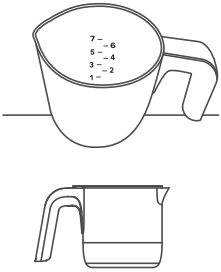

BREW CYCLE.

- As soon as you press go, LED lights around the Push Dial button will light up and will check for any error. If there are no erros Press Go again to start the countdown. This is a visual indication of the progress of the brew cycle.
- Water will start heating in the (A) top tea boiler and at the same time milk will start heating in the bottom (D) Milk carafe.
- When the tea brewing cycle is complete it will drain into the bottom (D) Milk Carafe. At this point the milk is boiling. Tea and milk will heat together for some time.
- When the cycle is complete, there will be a chime sound and brewer will go into the keep warm mode.

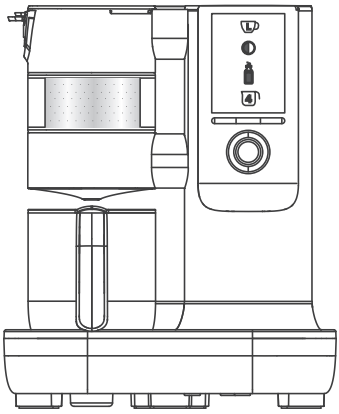

How To Care And Clean Chime

There are three parts that need to be cleaned up after every brew cycle.

RECYCLE CHIME CAP

Cap is just a carrier of tea and spices, the water does not touch the cap and the brewing happens in the top brewer and not the cap, hence it is recyclable. All you need to do is recycle the cap.

CLEAN STAINLESS STEEL SIEVE

Remove the Sieve from the top chamber, compost the tea, rinse the sieve and place it back for the next cycle.

CLEAN (D) MILK CARAFE WITH FROTHER

After pouring chai in a cup, Rinse (D) Milk Carafe and place it back for next cycle.

RINSE CYCLE

Quick rinse cycle is to clean the top brew chamber. You can select rinse cycle by holding the menu button for 3 secs and releasing it. After that use the dial to select the rinse cycle.

Rinse cycle is to maintain the machine and is used after the (B) Stainless Steel Sieve is cleaned. Do not run the rinse cycle before composting tea leaves and cleaning the sieve.

DEEP CLEAN

Deep clean cycle is used with a cleaning cap. Before running this cycle make sure to clean the sieve and place it back into the top chamber. DO NOT run the cycle with tea leaves in the sieve.

Place the cleaning Cap in to the cap holder and close the top lid. Press, hold and release menu button to access deep clean cycle. Select “Deep clean” which will run the cycle for 5 minutes and clean the top brewing chamber.

Troubleshooting

“FILL TANK” ALARM

If this alarm appears on the screen, that means either there is no (C) Water Tank in place or there is not enough water in the tank to run even one brew cycle. To clear the alarm, place the (C) Water Tank in the back or fill it with water.

“ADD CAP” ALARM

If this alarm appears on the screen, that means there is no chime cap present or placed. To clear alarm, place the Cap on the Cap holder as shown above.

“ADD CARAFE”

This alarm appears when the (D) Milk Carafe is not present in it place. To clear alarm, place the (D) Milk Carafe in the slot below the tea brewer as show above.

“NOISE”

If there is noise coming from the (D) Milk Carafe frother, it means the magnet is not properly engaged with the magnetic frothing disk. Swivel the carafe by its handle or wait for the cycle to complete. The next cycle the magnet will engage properly.

“STOP OPERATION”

To stop operation at any time, press the middle button that has the X sign. Operation has stopped once the LED lights surrounding the dial have stopped flashing or are not lit.

FCC Warning:

This equipment has been tested and found to comply with the limits for a Class B digital device, pursuant to part 15 of the FCC Rules. These limits are designed to provide reasonable protection against harmful interference in a residential installation. This equipment generates, uses and can radiate radio frequency energy and, if not installed and used in accordance with the instructions, may cause harmful interference to radio communications. However, there is no guarantee that interference will not occur in a particular installation. If this equipment does cause harmful interference to radio or television reception, which can be determined by turning the equipment off and on, the user is encouraged to try to correct the interference by one or more of the following measures:

- Reorient or relocate the receiving antenna.
- Increase the separation between the equipment and receiver.
- Connect the equipment into an outlet on a circuit different from that to which the receiver is connected.
- Consult the dealer or an experienced radio/TV technician for help.

Caution: Any changes or modifications to this device not explicitly approved by manufacturer could void your authority to operate this equipment.

This device complies with part 15 of the FCC Rules. Operation is subject to the following two conditions: (1) This device may not cause harmful interference, and (2) this device must accept any interference received, including interference that may cause undesired operation.

RF warning for Mobile device:

This equipment complies with FCC radiation exposure limits set forth for an uncontrolled environment. This equipment should be installed and operated with minimum distance 20cm between the radiator & your body.