User Manual

Note: Before using the product, please read the instructions carefully!
Do not attempt to disassemble this product. If the product does not work properly, please contact your supplier.

Contents

Product performance 3

Product description 4

Installation and connection 5

Description of distribution board 8

Power on wiring Guide 9

Remote Control 11

Description of Basic Operation 13

Technical Specifications 14

Safety precautions 15

FCC STATEMENT 16

Product performance

1. Embedded with Windows 10 smart operating system and unique UI design, bringing you a more convenient operation and better visual experience.
2. Massive APPs support such functions as chatting, searching, learning, shopping, and reading. E-mail system supports sync sending and receiving.
3. Support USB mouse and keyboard.
4. Using energy-saving LED Ultra-high brightness backlight module, LCD screen brightness up to 2500nits.
5. High resolution, high contrast, high brightness, visible under strong light.
6. Automatic brightness adjustment, according to the ambient light automatically adjust the screen brightness (maximum energy saving).
7. The temperature control system can adjust the internal temperature of the equipment to ensure that the equipment runs in the environment temperature of - 10 ~ 50 ℃.
8. Excellent cooling fan cooling system, stable and reliable performance.
9. The outdoor protection grade reaches IP55, waterproof, dustproof, moisture proof and explosion-proof, meeting the requirements of outdoor harsh environment.
10. Support playback of various multimedia file formats: MP4, AVI, DAT, MPG, RM, RMVB, AVC, FLV, etc.
11. The device adopts high integration modular design, standardized design, working state at a glance, can realize fast maintenance.
12. Long service life, 7*24 hours uninterrupted work, up to 50,000 hours.
13. Intelligent On/Off switch.

Statement: Due to the continuous improvement and update of our products, we reserve the right to amend the contents of this guide without prior notice.

Product description

Do not cover or block the heat sink

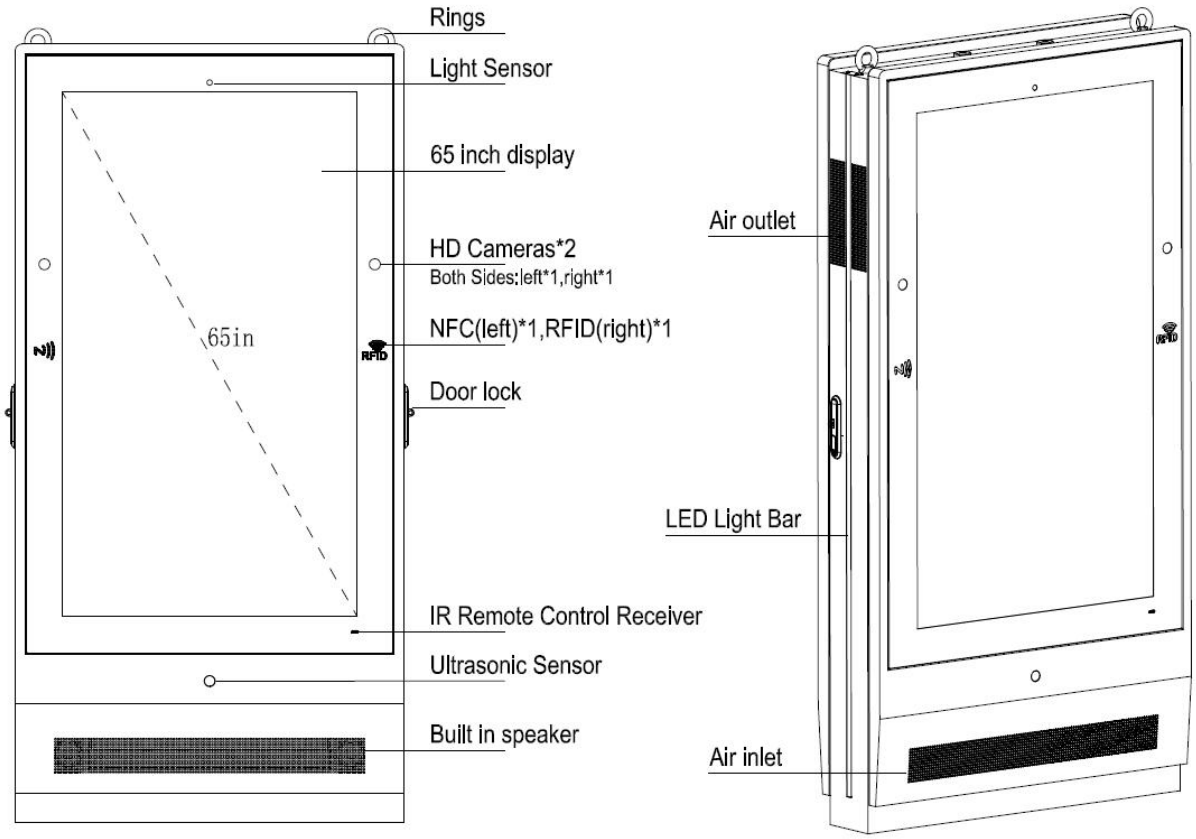

Note: the pictures and instructions in the manual are for reference only. If they are inconsistent with the actual product, please refer to the actual product.

Installation and connection

1. Concrete foundation:

1-1. Install the concrete foundation in advance. Figure 1 shows the size of the foundation.

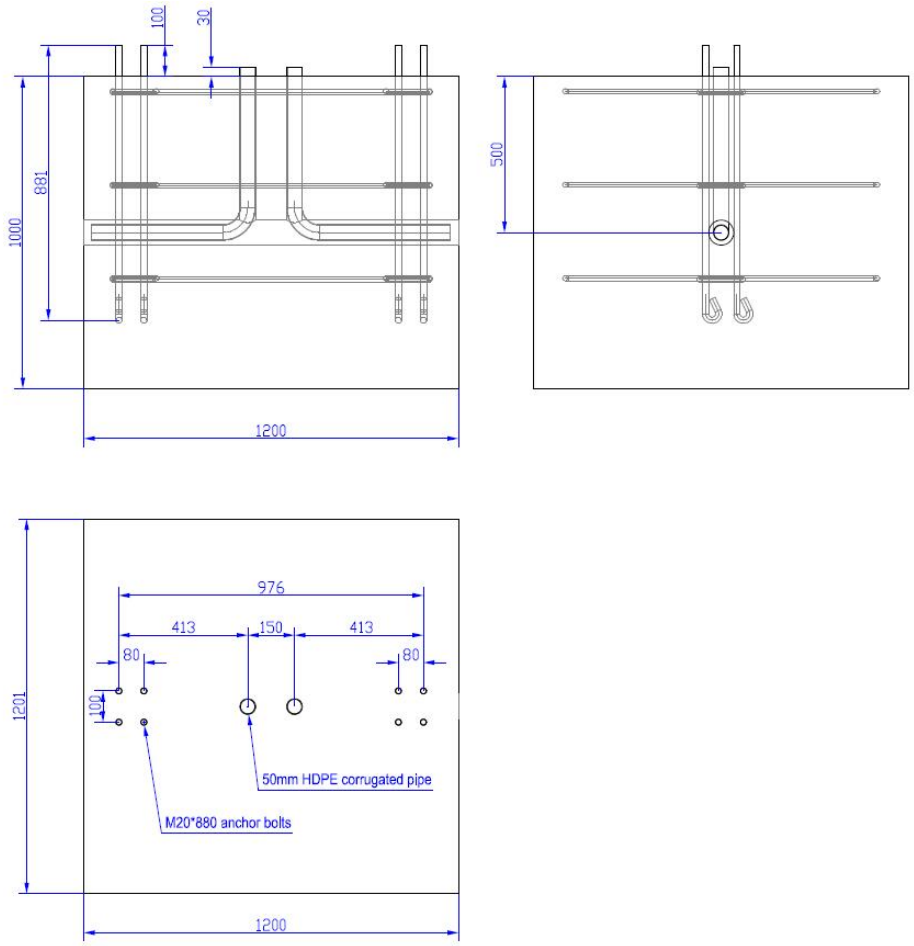

(Fig. 1)

1-2. Place anchor bolts and conduits pipes in the concrete foundation, as shown in Figure 2,

1-3. Concrete foundation, anchor bolts and conduits should be kept for more than 24 hours, as shown in Figure 3.

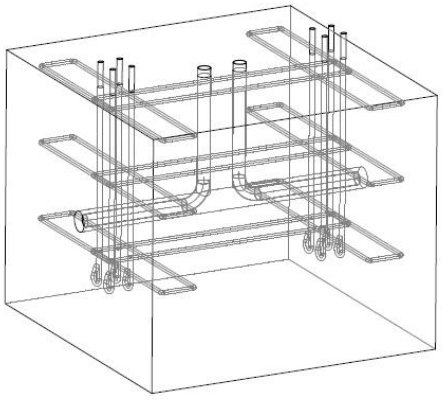

(Fig. 2)

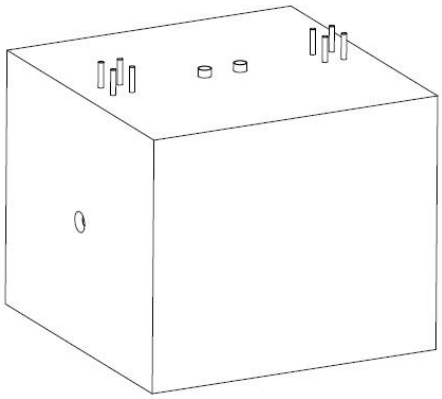

(Fig. 3)

Note:

1. M20 * 880 anchor bolt, M20 nut * 8, M20 spring washer * 8, M20 flat washer * 8 (provided by the customer)
2. The diameter of HDPE corrugated pipe is 50mm, which is used for cables to come through
3. C25 concrete

Remark:

1. Foundation concrete cement: C25 concrete (no rebar is required), C25 concrete mix proportion: cement: water: sand: gravel=1:0.47:1.59:3.39,
2. Other materials: wooden board is used as concrete formwork. Use quick drying agent for concrete (solidified after about 12 hours).

2. Open the case

2-1. Remove the wooden box first, as shown in Figure 2,

2-2. Then remove the EPE form, as shown in Figure 3,

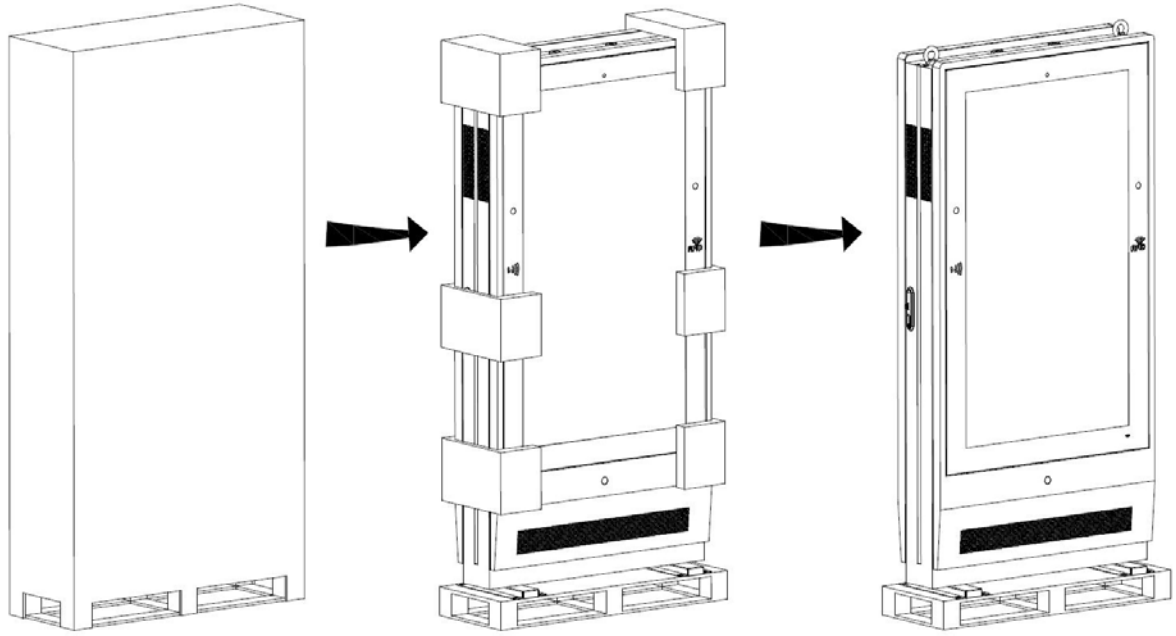

(Fig. 1) (Fig. 2) (Fig. 3)

2-3. Open the door lock. Use 14 mm hex socket wrench to remove the hex socket screw connecting the outdoor digital sign and the base, as shown in Figure 4,

2-4. Figure 5 is the schematic diagram of equipment and base removal,

2-5. Before hanging the outdoor digital sign onto the concrete foundation, the door should be closed and locked tightly, as shown in Figure 6.

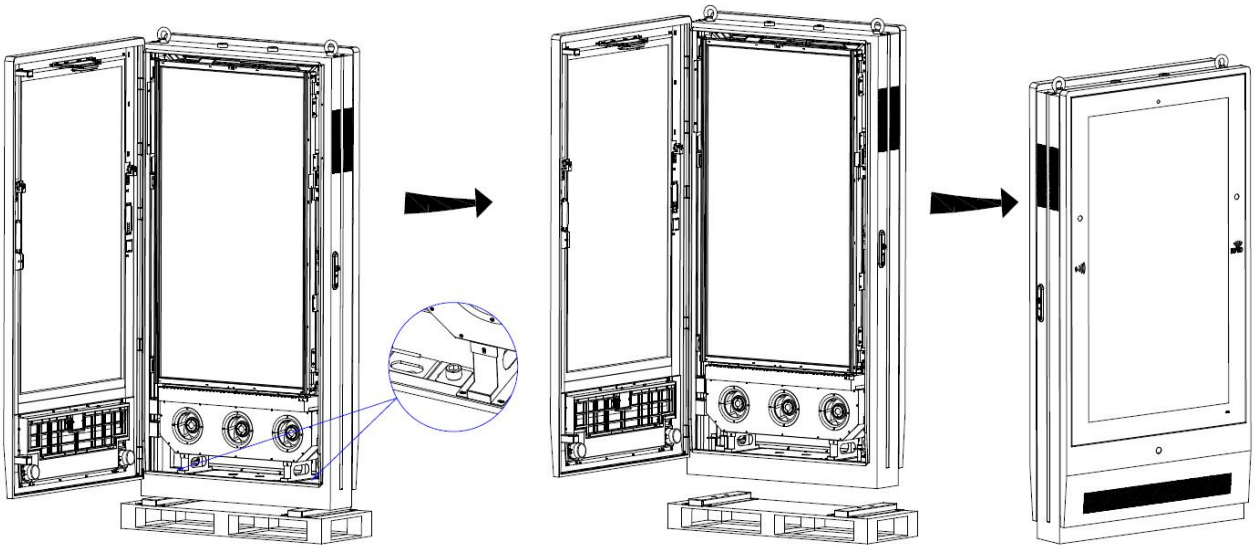

(Fig. 4) (Fig. 5) (Fig. 6)

3. Installation steps

3-1. Outdoor digital signage, as shown in Figure 1,

3-2. Lift the device to the concrete foundation, as shown in Figure 2,

3-3. Open the door lock, install the M20 nut, spring washer and flat washer matching the anchor bolt. Place the outdoor digital signage on the concrete foundation. Check whether the installation is firm and reliable, as shown in Figure 3,

3-4. The reference figure after the concrete foundation is installed, as shown in Figure 4.

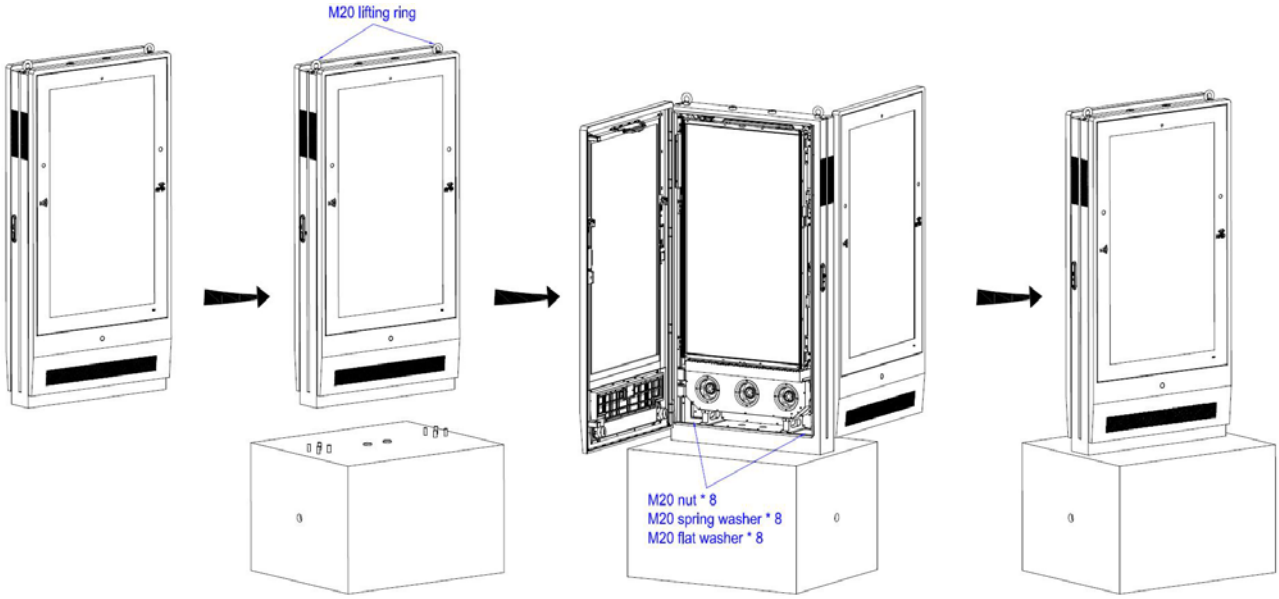

(Fig. 1) (Fig. 2) (Fig. 3) (Fig. 4)

Description of distribution board

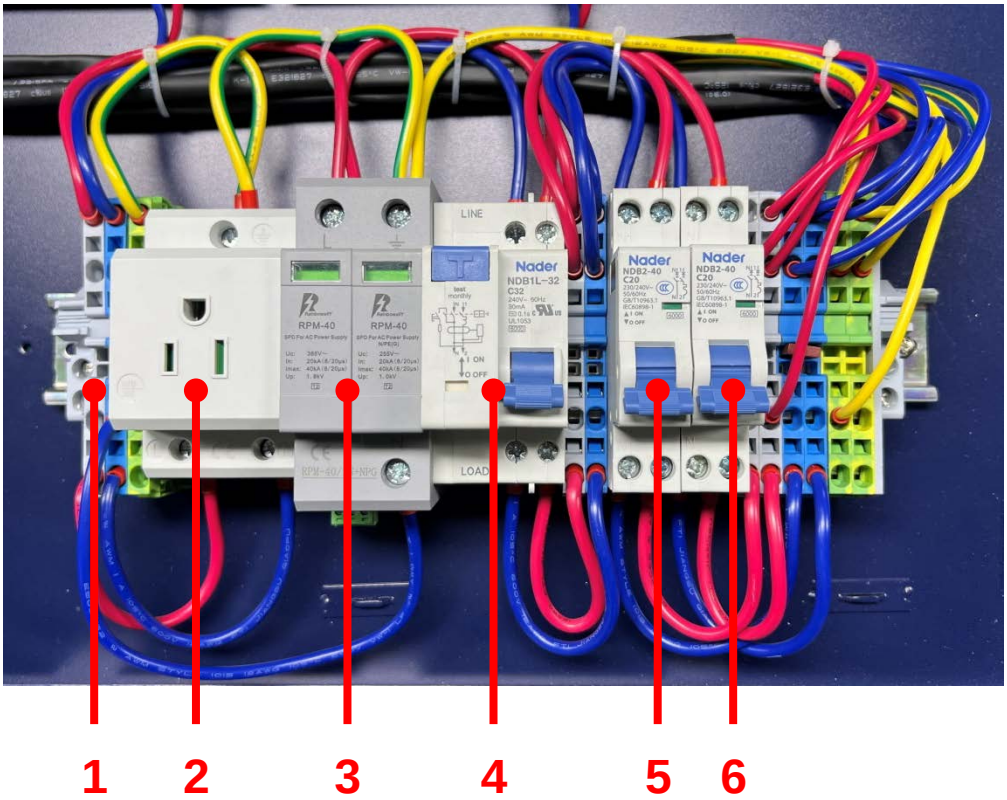

1. **External AC input terminal block:**

Gray is the fire line.
Blue is the zero line.
Yellow green is the ground line.

2. **Socket**

3. **Surge protective device**

4. **Leakage protector**

5. **Air Circuit Breaker:** For Cooling fan

6. **Air Circuit Breaker:** For LCD screen and 4K display board

Power on wiring Guide

1. Open the door lock of the device and get three core power cords from the bottom, as shown in the figure below:

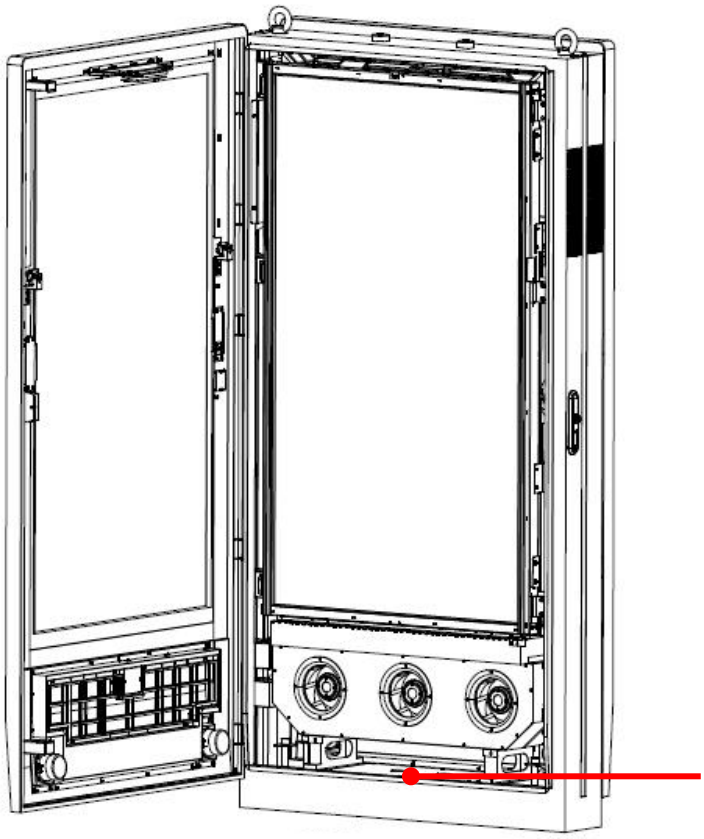

There is a hole in the middle of the bottom, through which power lines can be introduced

2-1. Connect L, N and G of the power cord to the grey, blue and yellow green terminals at the left end.

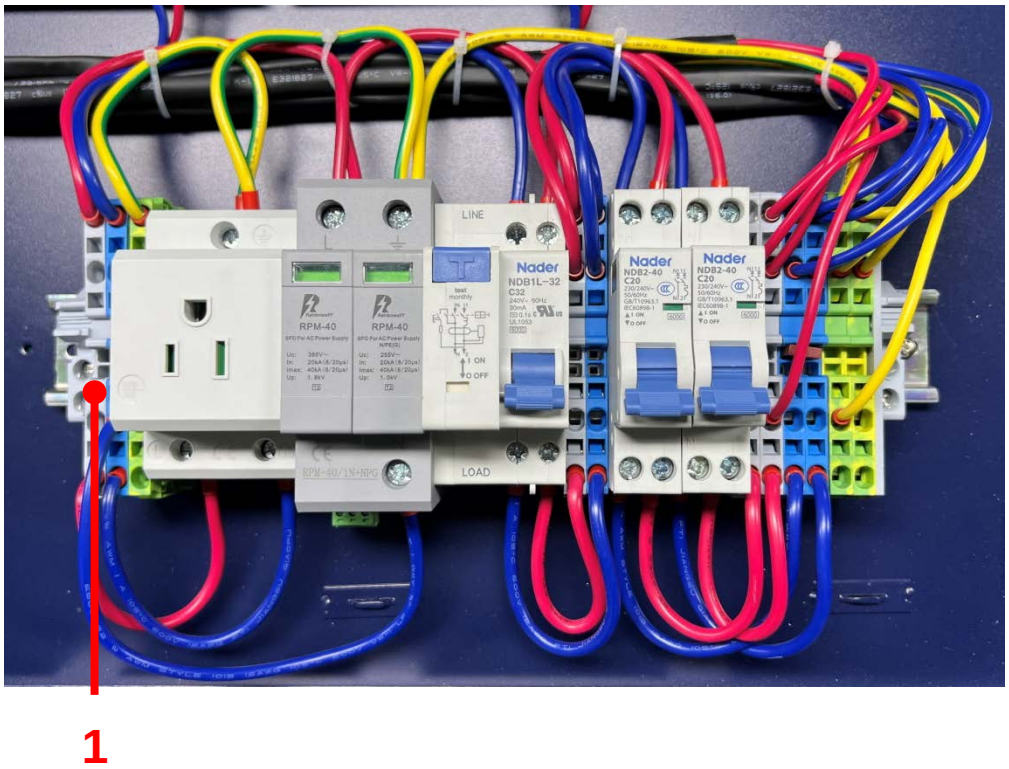

2-2. Use a screwdriver (recommended dia3mm) to insert into the hole. At the same time, connect the power cord L, N and G to the gray, blue and yellow/green terminals.
2-3. As shown in the figure below, the L pole of the power cord is connected to the gray terminal, the N pole of the power cord is connected to the blue terminal, and the G pole of the power cord is connected to the yellow green terminal. The picture shows that the power cord is well connected.
2-4. After the power cord is connected, pull each wire to confirm whether it is fastened.
2-5. After the above steps are confirmed, the device can be turned on.

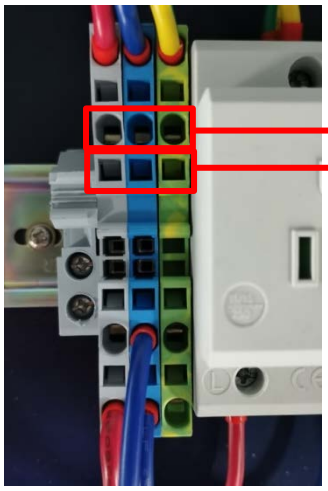

Connect the power cord
Use a screwdriver (recommended dia3mm) **to insert into the hole**

3. Set the leakage protector to power on mode.

Dial the upward direction to "ON" mode
Dial the downward direction to "OFF" mode

4. Two air circuit breaker are set to power on mode.

Dial the upward direction to "ON" mode
Dial the downward direction to "OFF" mode

5. After the above steps are completed, you can boot up completely, and then you will automatically enter the main interface of Android OS.

Remote control

1. Precautions for using the remote control

- Aim the remote control at the receiver window. Do not place any object between the remote control and the receiver window to avoid interference with the normal operation.
- Keep the remote control away from violent vibration. In addition, do not set or place the remote control in direct sunlight, or else the remote control may be deformed by heat.
- The remote control may be invalid when the receiver window of the unit is in direct sunlight or strong lighting, in this case, please adjust the angle of the lighting or the unit or approach the receiver window to use it.
- The distance of remote control will be shortened if the battery voltage is insufficient, in this case, please replace with new batteries, if the remote control won't be used for a long time or the batteries are run out, please take out the batteries to avoid corrosion due to battery leakage, which will damage the remote control.
- Do not use batteries of different types or mix new batteries with old ones. Always replace the batteries in pairs.
- Do not put the batteries in fire, or charge or disassemble them, or charge, short circuit, disassemble, heat or burn used batteries. Please dispose of waste batteries in accordance with local environmental regulations. Do not expose the batteries in overheated environments such as sunlight and fire.

2. Screen remote control

2-1. Installing batteries for the screen remote control:

Remove the battery cover and insert two AAA batteries (1.5V). Ensure that the battery polarity matches the "+"/"-" marks in the battery compartment of the remote control.

2-2. Description of screen remote control buttons:

Remark: The real appearance of the remote control may be different from the picture, please refer to the actual product.

LOG	Button	Function
⏻	Power	Control main board power on/off
☰	MUNE	Open or close the MENU
⇥	Source	Open input source item
▲	UP	Press the key can up to choose the item after
▼	Down	Press the key can down to choose the item after
OK	Enter	1.Press the key Can display source information, 2.Enter the menu. Select the item to be adjusted and press this key to enter the parameter adjustment interface.
⏭	Left	1.To the left to choose after open menu, 2.When entering the parameter adjustment interface, press this key to reduce the value.
⏮	Right	1.To the right to choose after open menu, 2.When entering the parameter adjustment interface, press this key to increase the value.
-	Vol -	Reduce volume value
+	Vol +	Increase volume value
⏯	Play/Pause	Press this key to play or pause multimedia in USB
↩	Back	Press this key to exit the menu
🔇	Mute	Press this key to switch on and off the sound

2. LED light bar remote control

2-1. Installing batteries for the LED light bar remote control:

Remove the battery cover and insert one CR2025 batteries (3V). Ensure that the battery polarity matches the “+” marks in the battery compartment of the remote control.

2-2. Description of LED light bar remote control buttons:

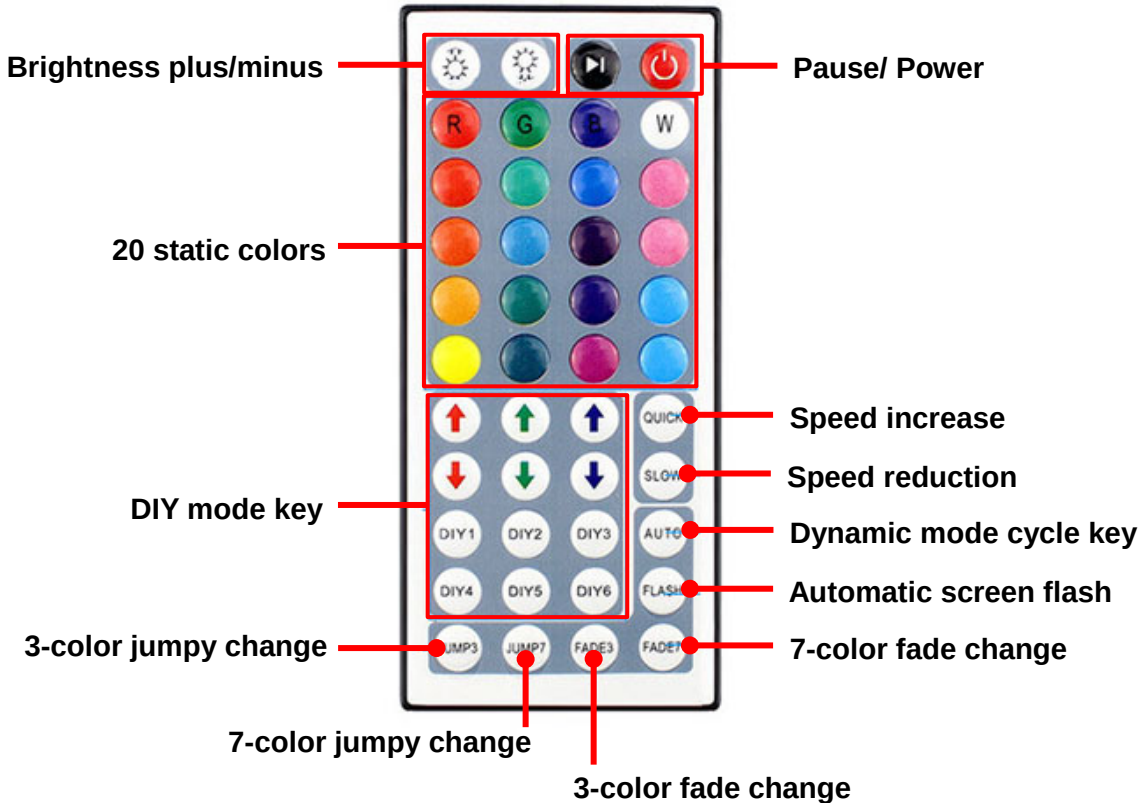

Remark: The real appearance of the remote control may be different from the picture, please refer to the actual product.

Description of Basic Operation

After the product equipment is powered on, you can enter the system interface.

Technical Specifications

	ITEM	SPECIFICATION
Panel	LCD size	65”
	Light source	High Brightness LCD Module
	Resolution	3840*2160 (pixels)
	Brightness (cd/m^2)	2500
	Contrast	1100: 1
	Viewing angle	178° (H)/178° (V)
	Viewable area	1428.5(H) mm * 803.5(V) mm
	Chromaticness	1.07G
Power supply	Voltage	100V~240V, 50-60Hz
	Power Consumption	≤1200W
Environment	Operating temperature	-10~50°C
	Storage temperature	-20~60°C
	Operating humidity	20~80% RH Non-condensing
	Storage humidity	10~60% RH Non-condensing
Functions	Operating system	Windows10
	Processor	I5
	RAM	16G
	ROM	256G
	Touch support	10 Points Capacitive Touch
Structure	Net weight	290kg
	Gross weight	335kg
	Unit dimensions (W*D*H)	1060*280*2120mm
	Package dimensions (W*D*H)	≈1140*425*2325mm (Wooden box)
Language	OSD	English/Simplified Chinese

⚠ Safety precautions

- Don't wipe the product with volatile oil, diluent, etc. which may deteriorate the housing or damage the painted surface. If rubber or vinyl are exposed to this product for a long time, it may cause stains.

- If the housing is dirty, clean it with water, and then wipe it with a soft cloth.

- LCD screen is a modern high-tech product. There are millions of pixels providing high-quality and clear picture. Occasionally there are random bright or dark spots on the panel. Please note that it i does not affect the performance of the product.

- There is high voltage in the equipment. Please don't try to disassemble the product by yourself, which may cause damage to the product and human body, and invalidate the product warranty.

- Do not remove the back cover. The internal adjustment and inspection of the product should be done by professionals.

- Please do not cover or block the air vent at the side of the housing.

- Please do not put sharp objects, metal, etc. into the air vent or touch the WIFI Antenna in case causing short circuit and product damage.

- This product should avoid the strong magnetic field (next to a loudspeaker, etc).

- The installation site of this product should be at an open area without high temperature objects close to the air vent.

- This product needs regular maintenance and surface cleaning after it is put into use.

This Manual is for reference only and is subject to change without prior notice.

FCC STATEMENT:

This device complies with Part 15 of the FCC Rules. Operation is subject to the following two conditions:

(1) This device may not cause harmful interference, and

(2) This device must accept any interference received, including interference that may cause undesired operation.

Warning: Changes or modifications not expressly approved by the party responsible for compliance could void the user's authority to operate the equipment.

NOTE: This equipment has been tested and found to comply with the limits for a Class A digital device, pursuant to part 15 of the FCC Rules. These limits are designed to provide reasonable protection against harmful interference when the equipment is operated in a commercial environment. This equipment generates, uses, and can radiate radio frequency energy and, if not installed and used in accordance with the instruction manual, may cause harmful interference to radio communications. Operation of this equipment in a residential area is likely to cause harmful interference in which case the user will be required to correct the interference at his own expense.

FCC Radiation Exposure Statement:

This equipment complies with FCC radiation exposure limits set forth for an uncontrolled environment. This equipment should be installed and operated
with minimum distance 20cm between the radiator & your body.