RF TEST REPORT

Applicant	Positec Technology (China) Co., Ltd.
FCC ID	2ASC3RBT202501
Product	Robotic Lawnmower
Brand	KRESS
Model	KR272; KR274; KR276
Report No.	EFTA25060257-IE-05-R9
Issue Date	March 4, 2026

Eurofins TA Technology (Shanghai) Co., Ltd. tested the above equipment in accordance with the requirements in **FCC CFR47 Part 15C (2025)**. The test results show that the equipment tested is capable of demonstrating compliance with the requirements as documented in this report.

Prepared by: Xu Ying | *Approved by: Xu Kai*

Eurofins TA Technology (Shanghai) Co., Ltd.

Building 3, No.145, Jintang Rd, Pudong Shanghai, P.R.China

TEL: +86-021-50791141/2/3

FAX: +86-021-50791141/2/3-8000

TABLE OF CONTENT

1. Test Laboratory 4
1.1. Notes of the Test Report 4
1.2. Test Facility 4
1.3. Testing Location 4
2. General Description of Equipment Under Test 5
2.1. Applicant and Manufacturer Information 5
2.2. General Information 5
3. Applied Standards 7
4. Test Configuration 8
5. Test Case 9
5.1. Unwanted Emission 9
5.2. Conducted Emission 16
6. Test Results 17
6.1. Unwanted Emission 17
6.2. Conducted Emission 18
7. Main Test Instruments 19
8. The EUT Appearance 20
9. Test Setup Photos 21
10. Product Change Description 22

This report shall not be reproduced except in full, without the written approval of Eurofins TA Technology (Shanghai) Co., Ltd.

Summary of Measurement Results

Number	Test Case	Clause in FCC rules	Verdict
1	Unwanted Emissions	15.247(d), 15.205, 15.209	PASS
2	Conducted Emissions	15.207	PASS
Date of Testing: (Original) July 24, 2025 ~ October 15, 2025 (Variant) January 10, 2026 ~ March 4, 2026 Date of Sample Received: (Original) June 16, 2025 (Variant) December 31, 2025			
Note: All indications of Pass/Fail in this report are opinions expressed by Eurofins TA Technology (Shanghai) Co., Ltd. based on interpretations and/or observations of test results. Measurement Uncertainties were not taken into account and are published for informational purposes only.			

KR272; KR274; KR276 (Report No.: EFTA25060257-IE-05-R9) is a variant model of WR340 (Report No.: EFTA25060257-IE-05-R1).

Description		Structural appearance	Button	Operation control board	Adapter	Battery
WR340	Configuration1	Appearance 1	Touch buttons	PLB100.1.11	WA3805	WA3675
KR272	Configuration2	Appearance 2	Film coated buttons	PLB101.2.10	KA3733	KA3006
KR274	Configuration2				KA3725	KA3006
KR276	Configuration2				KA3727	KA3010

Considering to the difference, after technical assessment, this product only tested Unwanted Emissions and Conducted Emissions based on the worst case of the original report and other test data please refer to the original report.

The detailed product change description please refers to the *Difference Declaration Letter*.

This report shall not be reproduced except in full, without the written approval of Eurofins TA Technology (Shanghai) Co., Ltd.

1. Test Laboratory

1.1. Notes of the Test Report

This report shall not be reproduced in full or partial, without the written approval of **Eurofins TA Technology (Shanghai) Co., Ltd.** The results documented in this report apply only to the tested sample, under the conditions and modes of operation as described herein. Measurement Uncertainties were not taken into account and are published for informational purposes only. This report is written to support regulatory compliance of the applicable standards stated above.

1.2. Test Facility

FCC (Designation number: CN1179, Test Firm Registration Number: 446626)

Eurofins TA Technology (Shanghai) Co., Ltd. has been listed on the US Federal Communications Commission list of test facilities recognized to perform measurements.

A2LA (Certificate Number: 3857.01)

Eurofins TA Technology (Shanghai) Co., Ltd. has been listed by American Association for Laboratory Accreditation to perform measurement.

1.3. Testing Location

Company:	Eurofins TA Technology (Shanghai) Co., Ltd.
Address:	Building 3, No.145, Jintang Rd, Pudong Shanghai, P.R.China
City:	Shanghai
Post code:	201201
Country:	P. R. China
Contact:	Xu Kai
Telephone:	+86-021-50791141/2/3
Fax:	+86-021-50791141/2/3-8000
Website:	https://www.eurofins.com/electrical-and-electronics
E-mail:	Kain.Xu@cpt.eurofinscn.com

This report shall not be reproduced except in full, without the written approval of Eurofins TA Technology (Shanghai) Co., Ltd.

2. General Description of Equipment Under Test

2.1. Applicant and Manufacturer Information

Applicant	Positec Technology (China) Co., Ltd.
Applicant address	18, Dongwang Road, Suzhou Industrial Park, Jiangsu 215123, P.R.China
Manufacturer	Positec Technology (China) Co., Ltd.
Manufacturer address	18, Dongwang Road, Suzhou Industrial Park, Jiangsu 215123, P.R.China

2.2. General Information

EUT Description			
Model	KR272; KR274; KR276		
Lab internal SN	Original	Conducted	250616-35-013
		Radiated	250616-35-003
SN	Variant	Radiated	20251115561000014216
Hardware Version	PLB101.2.10		
Software Version	3.44B54		
Power Supply	Battery / AC adapter		
Antenna Type	PCB Antenna		
Antenna Connector	A permanently attached antenna (meet with the standard FCC Part 15.203 requirement)		
Antenna Gain	4.50 dBi		
Additional Beamforming Gain	NA		
Operating Frequency Range(s)	802.11b/g/n(HT20)/ax(HE20): 2412 ~ 2462 MHz 802.11n(HT40): 2422 ~ 2452 MHz Bluetooth LE V5.0: 2402 ~2480 MHz		
Modulation Type	802.11b: DSSS 802.11g/n: OFDM 802.11ax SU: OFDMA Bluetooth LE: GFSK		
Max. Output Power	Wi-Fi 2.4GHz: 22.19 dBm Bluetooth LE: 14.48 dBm		
Operating voltage range	12.5 Vdc to 20.1 Vdc		
State voltage	18.5 Vdc		
EUT Accessory			
Adapter 1	Manufacturer: Positec Technology (China) Co., Ltd. Model: KA3733		

This report shall not be reproduced except in full, without the written approval of Eurofins TA Technology (Shanghai) Co., Ltd.

	Input: 120V, 90W Output: 20V, 3A
Adapter 2	Manufacturer: Positec Technology (China) Co., Ltd. Model: KA3725 Input: 120V, 190W Output: 28V, 5A
Adapter 3	Manufacturer: Positec Technology (China) Co., Ltd. Model: KA3727 Input: 120V Output: 28V, 7A
Battery 1	Manufacturer: Positec Technology (China) Co., Ltd. Model: KA3006 DC 20V, 6Ah
Battery 2	Manufacturer: Positec Technology (China) Co., Ltd. Model: KA3010 DC 20V, 10Ah
Note: 1. The EUT is sent from the applicant to Eurofins TA and the information of the EUT is declared by the applicant.	

This report shall not be reproduced except in full, without the written approval of Eurofins TA Technology (Shanghai) Co., Ltd.

3. Applied Standards

According to the specifications of the manufacturer, it must comply with the requirements of the following standards:

Test standards:

FCC CFR47 Part 15C (2025) Radio Frequency Devices

ANSI C63.10-2020+Cor.1-2023

Reference standard:

KDB 558074 D01 15.247 Meas Guidance v05r02

This report shall not be reproduced except in full, without the written approval of Eurofins TA Technology (Shanghai) Co., Ltd.

4. Test Configuration

Test Mode

The EUT has been associated with peripherals and configuration operated in a manner tended to maximize its emission characteristics in a typical application.

In order to find the worst case condition, Pre-tests are needed at the presence of different data rate. Preliminary tests have been done on all the configuration for confirming worst case. Data rate below means worst-case rate of each test item.

Worst-case data rates are shown as following table.

Test Mode	Data Rate
Bluetooth(Low Energy)	1Mbps; 2Mbps
802.11b	1 Mbps
802.11g	6 Mbps
802.11n HT20	MCS0
802.11n HT40	MCS0
802.11ax HE20	MCS0

This report shall not be reproduced except in full, without the written approval of Eurofins TA Technology (Shanghai) Co., Ltd.

5. Test Case

5.1. Unwanted Emission

Ambient Condition

Temperature	Relative humidity
15°C ~ 35°C	20% ~ 80%

Method of Measurement

The test set-up was made in accordance to the general provisions of ANSI C63.10.
The Equipment Under Test (EUT) was set up on a non-conductive table in the semi-anechoic chamber. The test was performed at the distance of 3 m/10m below 1GHz, 3m above 1GHz between the EUT and the receiving antenna.

The turntable shall be rotated from 0 to 360 degrees for detecting the maximum of radiated spurious signal level. The measurements shall be repeated with orthogonal polarization of the test antenna.The data of cable loss and antenna factor has been calibrated in full testing frequency range before the testing. Sweep the Restricted Band and the emissions less than 20 dB below the permissible value are reported.
The radiated emissions measurements were made in a typical installation configuration.
Sweep the whole frequency band through the range from 9 kHz to the 10th harmonic of the carrier, and the emissions less than 20 dB below the permissible value are reported.

This method refer to ANSI C63.10.
The procedure for peak unwanted emissions measurements above 1000 MHz is as follows:
Set the spectrum analyzer in the following:
9kHz~150 kHz
RBW=200Hz, VBW=1kHz/ Sweep=AUTO
150 kHz~30MHz
RBW=9kHz, VBW=30kHz,/ Sweep=AUTO
Below 1GHz
RBW=100kHz / VBW=300kHz / Sweep=AUTO
a) Peak emission levels are measured by setting the instrument as follows:
Above 1GHz
PEAK: RBW=1MHz VBW=3MHz/ Sweep=AUTO
b) Average emission levels are measured by setting the instrument as follows:
Above 1GHz
AVERAGE: RBW=1MHz / VBW=3MHz / Sweep=AUTO
c) Detector: The measurements employing a CISPR quasi-peak detector except for the frequency bands 9-90 kHz, 110-490 kHz and above 1000 MHz. Radiated emission limits in these three bands

This report shall not be reproduced except in full, without the written approval of Eurofins TA Technology (Shanghai) Co., Ltd.

are based on measurements employing an average detector.

d) Averaging type = power (i.e., rms) (As an alternative, the detector and averaging type may be set for linear voltage averaging. Some instruments require linear display mode to use linear voltage averaging. Log or dB averaging shall not be used.)

e) Sweep time = auto.

f) Perform a trace average of at least 100 traces if the transmission is continuous. If the transmission is not continuous, then the number of traces shall be increased by a factor of 1 / D, where D is the duty cycle. For example, with 50% duty cycle, at least 200 traces shall be averaged. (If a specific emission is demonstrated to be continuous—i.e., 100% duty cycle—then rather than turning ON and OFF with the transmit cycle, at least 100 traces shall be averaged.)

g) If tests are performed with the EUT transmitting at a duty cycle less than 98%, then a correction factor shall be added to the measurement results prior to comparing with the emission limit, to compute the emission level that would have been measured had the test been performed at 100% duty cycle. The correction factor is computed as follows:

1) If power averaging (rms) mode was used in the preceding step e), then the correction factor is [10 log (1 / D)], where D is the duty cycle. For example, if the transmit duty cycle was 50%, then 3 dB shall be added to the measured emission levels.

2) If linear voltage averaging mode was used in the preceding step e), then the correction factor is [20 log (1 / D)], where D is the duty cycle. For example, if the transmit duty cycle was 50%, then 6 dB shall be added to the measured emission levels.

3) If a specific emission is demonstrated to be continuous (100% duty cycle) rather than turning ON and OFF with the transmit cycle, then no duty cycle correction is required for that emission.

The test is in transmitting mode.

This report shall not be reproduced except in full, without the written approval of Eurofins TA Technology (Shanghai) Co., Ltd.

Test Setup

9kHz~ 30MHz

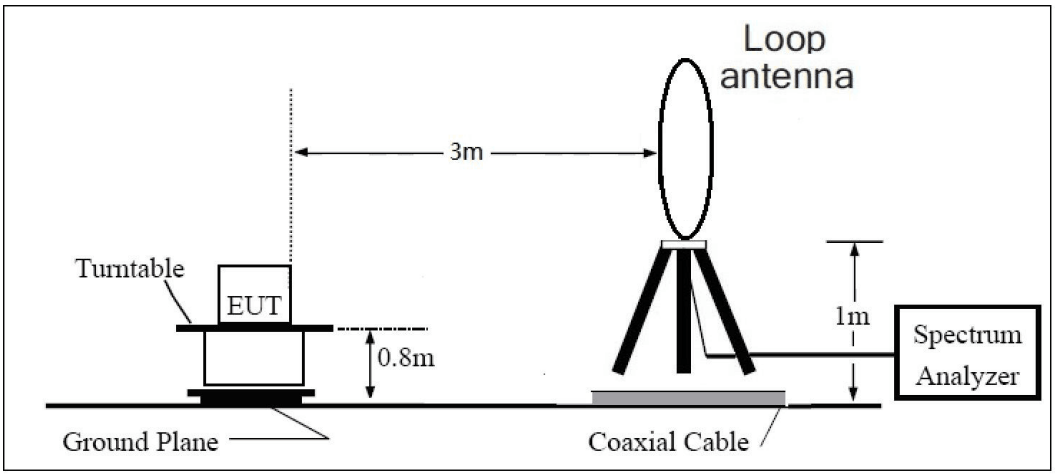

Note: Area side:2.4mX3.6m

Distance 10m

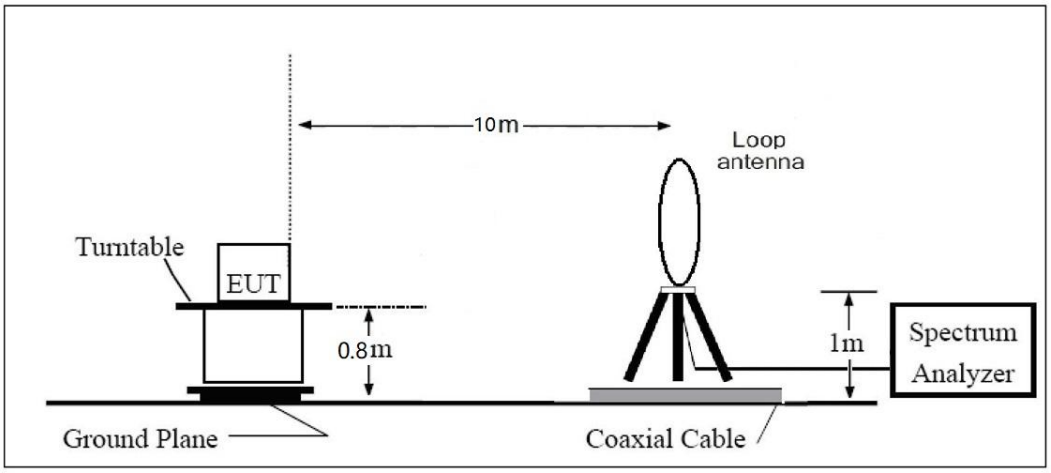

Note: Area side: 21m x 12m

30MHz~ 1GHz

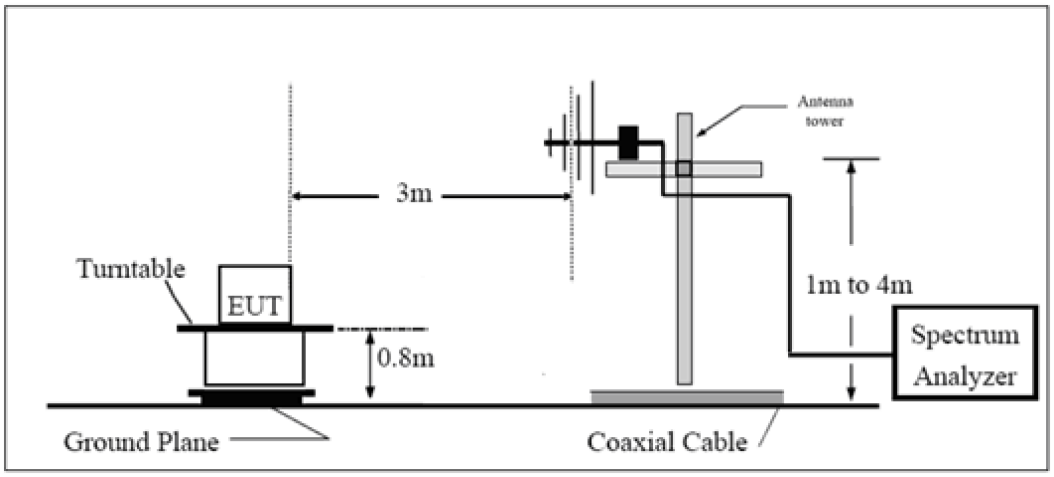

This report shall not be reproduced except in full, without the written approval of Eurofins TA Technology (Shanghai) Co., Ltd.

Note: Area side:2.4mX3.6m

Distance 10m

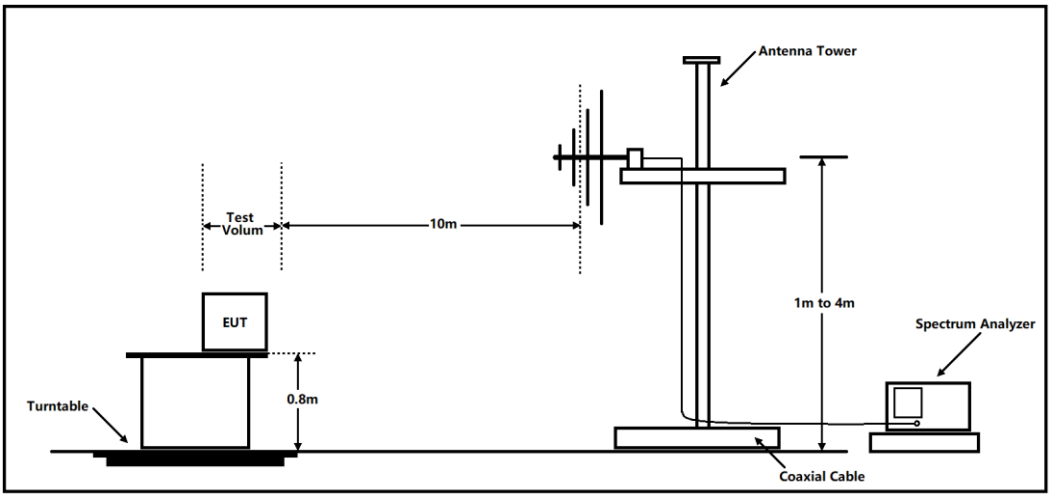

Note: Area side: 21m x 12m

Above 1GHz

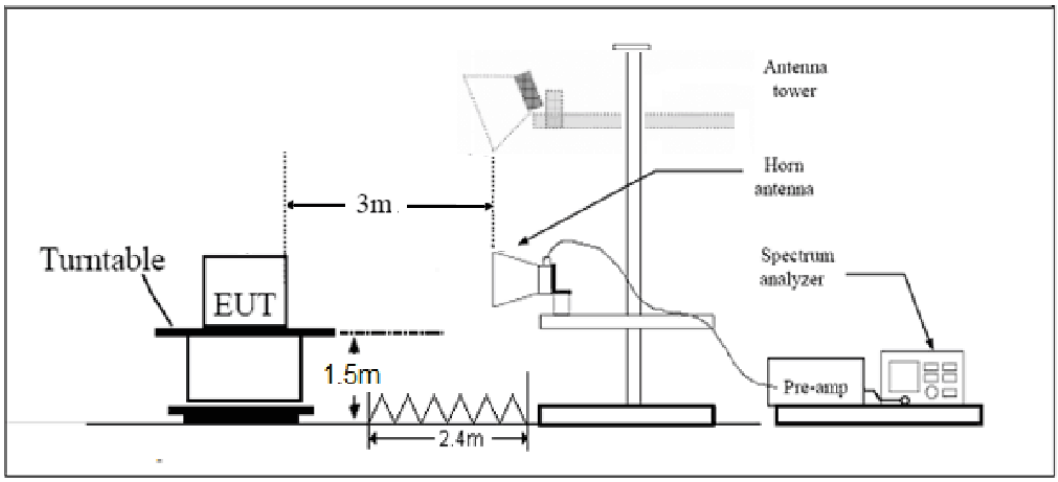

Note: Area side:2.4mX3.6m

This report shall not be reproduced except in full, without the written approval of Eurofins TA Technology (Shanghai) Co., Ltd.

Limits

Rule Part 15.247(d) specifies that "In addition, radiated emissions which fall in the restricted bands, as defined in § 15.205(a), must also comply with the radiated emission limits specified in § 15.209(a) (see § 15.205(c))."

Limit in restricted band

Frequency of emission (MHz)	Field strength (μV/m)	Field strength (dBμV/m) @ 3 m	Field strength (dBμV/m) @ 10 m
0.009–0.490	2400/F(kHz)	/	/
0.490–1.705	24000/F(kHz)	/	/
1.705–30.0	30	/	/
30-88	100	40	30
88-216	150	43.5	33.5
216-960	200	46	36
960 -1000	500	54	44
Above 1000	500	54	--

§15.35(b)

There is also a limit on the radio frequency emissions, as measured using instrumentation with a peak detector function, corresponding to 20 dB above the maximum permitted average limit.

Peak Limit=74 dBμV/m

Average Limit=54 dBμV/m

This report shall not be reproduced except in full, without the written approval of Eurofins TA Technology (Shanghai) Co., Ltd.

Spurious Radiated Emissions are permitted in any of the frequency bands listed below:

MHz	MHz	MHz	GHz
0.090-0.110	16.42-16.423	399.9-410	4.5-5.15
[1] 0.495-0.505	16.69475-16.69525	608-614	5.35-5.46
2.1735-2.1905	16.80425-16.80475	960-1240	7.25-7.75
4.125-4.128	25.5-25.67	1300-1427	8.025-8.5
4.17725-4.17775	37.5-38.25	1435-1626.5	9.0-9.2
4.20725-4.20775	73-74.6	1645.5-1646.5	9.3-9.5
6.215-6.218	74.8-75.2	1660-1710	10.6-12.7
6.26775-6.26825	108-121.94	1718.8-1722.2	13.25-13.4
6.31175-6.31225	123-138	2200-2300	14.47-14.5
8.291-8.294	149.9-150.05	2310-2390	15.35-16.2
8.362-8.366	156.52475-156.52525	2483.5-2500	17.7-21.4
8.37625-8.38675	156.7-156.9	2690-2900	22.01-23.12
8.41425-8.41475	162.0125-167.17	3260-3267	23.6-24.0
12.29-12.293	167.72-173.2	3332-3339	31.2-31.8
12.51975-12.52025	240-285	3345.8-3358	36.43-36.5
12.57675-12.57725	322-335.4	3600-4400	([2])
13.36-13.41			

This report shall not be reproduced except in full, without the written approval of Eurofins TA Technology (Shanghai) Co., Ltd.

Measurement Uncertainty

The assessed measurement uncertainty to ensure 95% confidence level for the normal distribution is with the coverage factor *k* = 1.96.

Frequency	Uncertainty for 3m
9kHz-30MHz	3.55 dB
30MHz-200MHz	4.17 dB
200MHz-1GHz	4.84 dB
1-18GHz	4.35 dB
18-26.5GHz	5.90 dB
26.5GHz~40GHz	5.92 dB
Frequency	Uncertainty for 10m
30MHz – 200MHz	3.39 dB
200MHz – 1GHz	3.82 dB
1GHz – 18GHz	6.51 dB
18GHz – 40GHz	6.31 dB

This report shall not be reproduced except in full, without the written approval of Eurofins TA Technology (Shanghai) Co., Ltd.

5.2. Conducted Emission

Ambient Condition

Temperature	Relative humidity
15°C ~ 35°C	20% ~ 80%

Methods of Measurement

The EUT is placed on a non-metallic table of 80cm height above the horizontal metal reference ground plane. During the test, the EUT was operating in its typical mode. The test method is according to ANSI C63.10. Connect the AC power line of the EUT to the L.I.S.N. Use EMI receiver to detect the average and Quasi-peak value. RBW is set to 9 kHz, VBW is set to 30kHz.
The measurement result should include both L line and N line.
The test is in transmitting mode.

Test Setup

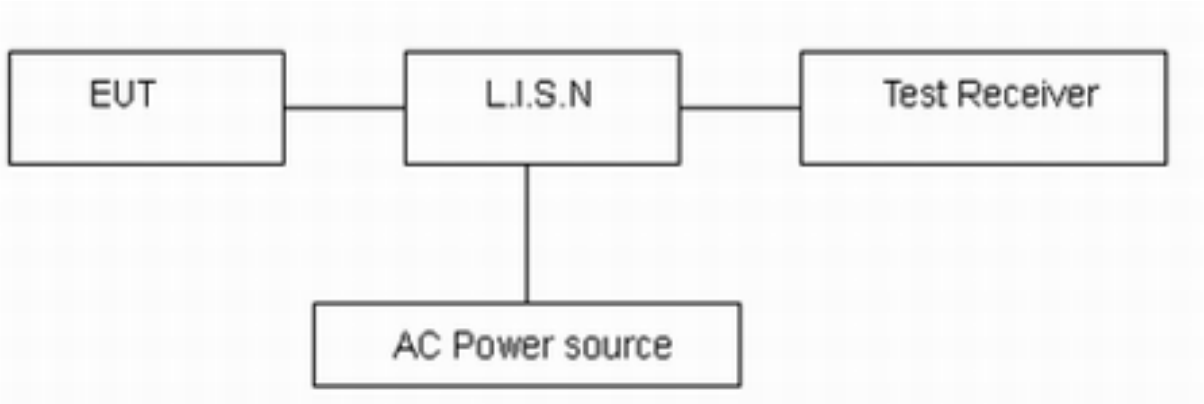

Note: AC Power source is used to change the voltage 110V/60Hz.

Limits

Frequency (MHz)	Conducted Limits(dBμV)	
	Quasi-peak	Average
0.15 - 0.5	66 to 56 *	56 to 46*
0.5 - 5	56	46
5 - 30	60	50
*: Decreases with the logarithm of the frequency.		

Measurement Uncertainty

The assessed measurement uncertainty to ensure 95% confidence level for the normal distribution is with the coverage factor k = 1.96, U= 2.69 dB.

This report shall not be reproduced except in full, without the written approval of Eurofins TA Technology (Shanghai) Co., Ltd.

6. Test Results

6.1. Unwanted Emission

The detailed test data see *EFTA25060257-IE-05-R9-ANNEX A* Test Result.

This report shall not be reproduced except in full, without the written approval of Eurofins TA Technology (Shanghai) Co., Ltd.

6.2. Conducted Emission

The detailed test data see *EFTA25060257-IE-05-R9-ANNEX A* Test Result.

This report shall not be reproduced except in full, without the written approval of Eurofins TA Technology (Shanghai) Co., Ltd.

7. Main Test Instruments

Name	Manufacturer	Type	Serial Number	Calibration Date	Expiration Date
Power sensor	R&S	NRP18S	101954	2025-05-06	2026-05-05
Spectrum Analyzer	KEYSIGHT	N9020A	MY51330870	2025-05-06	2026-05-05
DC Power Supply	UNI-T	UTP1306S+	2205D0517426	2024-12-02	2025-12-01
Attenuator	HASCO	HA18A-10	0003	/	/
Test software	MW	MTS8310	2.0.0.0	/	/
EMI Test Receiver	R&S	ESCI3	100948	2025-05-07	2026-05-06
Signal Analyzer	R&S	FSV40	101186	2025-05-06	2026-05-05
Loop Antenna	SCHWARZBECK	FMZB1519	1519-047	2023-04-16	2026-04-15
TRILOG Broadband Antenna	SCHWARZBECK	VULB 9163	1023	2023-07-14	2026-07-13
Horn Antenna	SCHWARZBECK	BBHA 9120D	430	2024-07-18	2027-07-17
Amplifier	R&S	SCU18F	101022	2025-05-06	2026-05-05
Signal Analyzer	R&S	FSV40	101298	2025-05-07	2026-05-06
Horn Antenna	ETS-Lindgren	3160-09	00102643	2024-09-24	2027-09-23
Amplifier	MicroWave	KLNA-18040050	220826001	2025-05-06	2026-05-05
Software	R&S	EMC32	9.26.01	/	/
Artificial main network	R&S	ENV216	102191	2024-12-02	2026-12-01
EMI Test Receiver	R&S	ESR	101667	2025-05-06	2026-05-05
Software	R&S	EMC32	10.35.10	/	/

This report shall not be reproduced except in full, without the written approval of Eurofins TA Technology (Shanghai) Co., Ltd.

8. The EUT Appearance

Refer to *EUT Appearance*.

This report shall not be reproduced except in full, without the written approval of Eurofins TA Technology (Shanghai) Co., Ltd.

9. Test Setup Photos

Refer to *Part15C Test Setup.*

This report shall not be reproduced except in full, without the written approval of Eurofins TA Technology (Shanghai) Co., Ltd.

10. Product Change Description

Refer to Product Change Description.

******** END OF REPORT ********

This report shall not be reproduced except in full, without the written approval of Eurofins TA Technology (Shanghai) Co., Ltd.