CONTENTS

1 PRODUCT OVERVIEW 2

2 PRODUCT STRUCTURE 2

3 HOST CONFIGURATION 3

4 POWER ON/OFF 4

1) Power on 4

2) Power off 4

5 CONNECTION TO THE VEHICLE 5

6 INTRODUCTION OF EACH FUNCTION MENU 6

7 DIAGNOSTIC FUNCTION 8

8 SPECIAL FUNCTION 8

9 DIAGNOSTIC SOFTWARE UPGRADE 8

10 SETTINGS 9

1) Language 9

2) Unit 9

3) Brightness 10

4) Beeper 10

5) Feedback 10

6) About 10

1 Product Overview

ANCEL HD series products are commercial vehicle diagnostic tools .

This product integrates commercial vehicle OBD standard diagnostic protocols, including SAE J1939, SAE J1708, SAE J1850 PWM, SAE J1850 VPW, ISO 14230-4, ISO 9141-2, ISO 15765-4 and ISO 27145-4. The commercial vehicles are classified according to the vehicle type information, and the operation interface is very clear, which makes it convenient for users to diagnose commercial vehicles.

The product supports online upgrade of diagnostic program and diagnostic data.

2 Product Structure

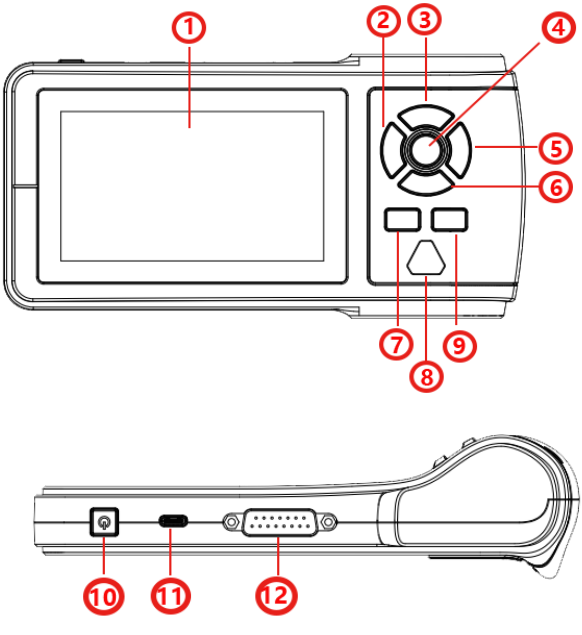

Serial No.	Name	Function Description
①	Screen	Display content
②	←	To the left
③	↑	Up
④	OK	Confirm
⑤	→	To the right
⑥	↓	Down
⑦	Return Key	Return to previous menu
⑧	Ancel Logo	Ancel Logo
⑨	Wi-Fi	Set Wi-Fi
⑩	Power	Press about 3 seconds to power on
⑪	USB Port	Used to connect to an external computer
⑫	Main Testing Port	Connection interface connects vehicle communication cable during vehicle diagnosis

3 Host Configuration

CPU	ARM 9 architecture
Memory	8G
Display	4.3” LCD 480x272
WIFI	2.4GHz
USB interface	Type C interface

Diagnose interface	DB15 interface
Operating voltage	DC 9V~36V/500mA
Operating temperature	-10℃~50℃
Storage temperature	-20℃~60℃

4 Power On/Off

1) Power on

The device can be powered on in the following ways:

- **Vehicle power on**: plug one end of the main diagnostic test line into the DB-15 interface of the device, and the other end into the diagnostic interface of the vehicle, and press the power key to start up. If it doesn't start up, it may be that there is no power supply for the vehicle diagnostic seat, and the device can be powered by the cigarette lighter or battery clamp.
- **Power on the power adapter**: plug one end of the main diagnostic test line into the DB-15 interface of the device, connect the power adapter, and press the power key to start up.

Note: the voltage of the power supply should be within the scope of application of the product equipment. If it is beyond the scope, the product may be damaged.

2) Power off

Before power off, please stop all diagnostic items and return

back to the main interface.

Pull out the diagnostic main test line from the diagnostic interface of the vehicle, the device will shut down automatically.

5 Connection to the vehicle

To establish good communication between the diagnostic program and the vehicle, the following operations need to be performed:

1) Turn off the ignition;

2) Find the diagnostic interface of the vehicle: it is usually located on the driver side; If the diagnostic interface is not found, please refer to the vehicle maintenance manual.

3) Insert one end of the diagnostic main test line into the device DB-15 connector and tighten the retaining screws. The other end is connected to the vehicle's diagnostic interface.

Note: Before the equipment is connected to the vehicle, it is necessary to judge whether the diagnostic seat of the vehicle is a standard OBD-II interface or a non-standard OBD-II interface.

The following is an operation description of two connection modes.

1) Connection of standard OBD-II interface

The vehicle connected with standard OBD-II interface only needs to use the integrated main test line OBD connector, and no other connectors are needed, as shown in the figure:

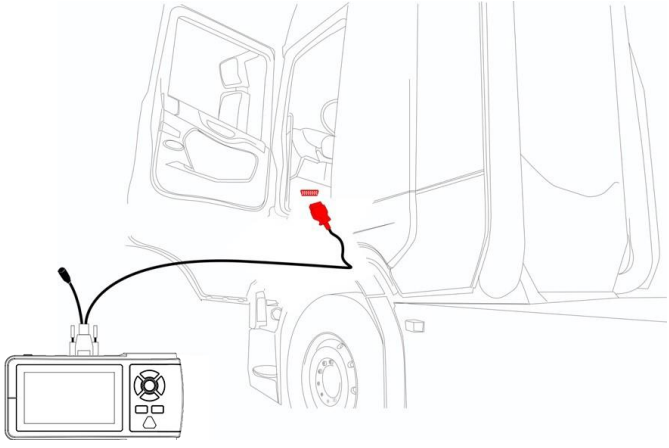

2) Connection of non OBD-II interface

Vehicles with non OBD-II interface need to connect the main test line with the corresponding special connector, as shown in the figure:

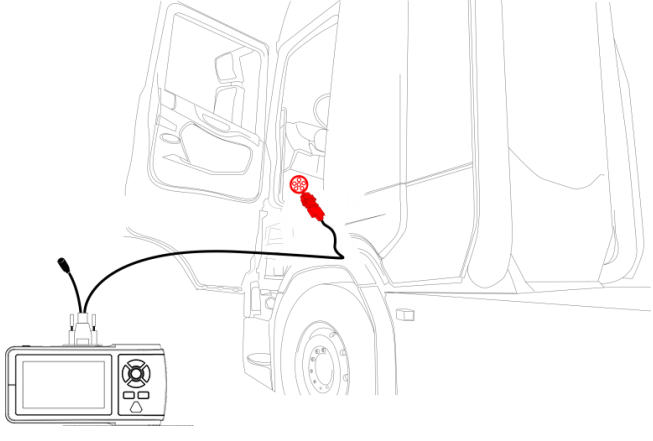

6 Introduction of Each Function Menu

After the system is started, the main menu of function will be

entered. Different product models have different menus. The following is HD430.

Table 1: Function main menu

Icon	Function name	Function description
	HD OBD	Diagnostic procedure: Diesel OBD
	OBD/EOBD	Diagnostic procedure: OBD-II
	HD DPF	HD DPF regeneration
	Update	For online upgrade of system software and vehicle software
	Setup	Set and view the basic system information

7 Diagnostic Function

The main diagnostic interface usually includes the following options:

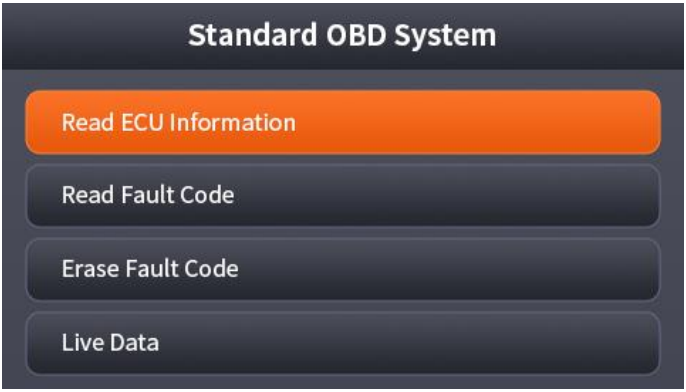

Read ECU Information: Read and display the control system module information detected from ECU.

Read Fault Code: Read the fault code information retrieved from the vehicle system module.

Erase Fault Code: Clear the fault code and freeze frame data retrieved from the vehicle system module.

Live Data: Read and display the real-time operation parameters of the current system module.

8 Special Function

The product provides special functions, such as DPF regeneration or modifying Speed Limit /Idle Speed /Idle Time. Please refer to the model you purchased for details.

9 Diagnostic Software Upgrade

By connecting the device to the wireless network, the diagnostic software and vehicle models database can be upgraded and

the product function can be improved in time.

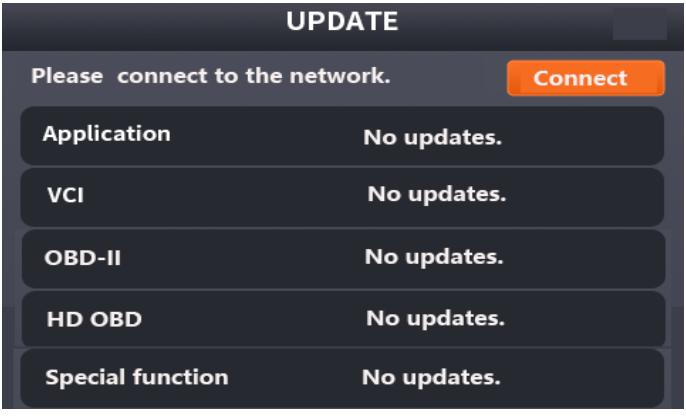

10 Settings

Select 【SETUP】 from the main menu to open the setting interface, where you can adjust the following system settings.

1) Language

Please select settings based on the language you support for the model you purchased.

2) Unit

This option can set the data flow unit in the diagnostic equipment software.

3) Brightness

The device supports screen brightness setting, please adjust it according to your adaptive brightness.

4) Beeper

The beep can be set as “On” or “Off”.

5) Feedback

Feedback problems to after-sales.

6) About

This option is used to look up the device model, version, serial number, etc.

Certification

This product has been strictly inspected as qualified products and met the company standards.

Product name	All System Truck Scanner
Product serial number	
Date of production	
Inspector	

Warranty card

Product name	All System Truck Scanner
Product serial number	
Purchase date	

Company name: _____

User address: _____

Contact person: _____

Contact number: _____

FCC Warning

This device complies with part 15 of the FCC rules. Operation is subject to the following two conditions: (1) this device may not cause harmful interference, and (2) this device must accept any inte rference received, including interference that may cause undesired operation.

Changes or modifications not expressly approved by the party responsible for compliance could void the user's authority to operate the equipment.

NOTE: This equipment has been tested and found to comply with the limits for a Class B digital device, pursuant to part 15 of the FCC Rules. These limits are designed to provide reasonable protection against harmful interference in a residential installation. This equipment generates uses and can radiate radio frequency energy and, if not installed and used in accordance with the instructions, may cause harmful interference to radio communications. However, there is no guarantee that interference will not occur in a particular installation. If this equipment does cause harmful interferenceto radio or television reception, which can be determined by turning the equipment off and on, the user is encouraged to try to correct the interference by one or more of the following measures:

- Reorient or relocate the receiving antenna.
- Reorient or relocate the receiving antenna.
- Reorient or relocate the receiving antenna.
- Consult the dealer or an experienced radio/TV technician for help important announcemen

Radiation Exposure Statement

This equipment complies with FCC radiation exposure limits set forth for an uncontrolled environment. This equipment should be installed and operated with minimum distance 20cm between the radiator and your body.