承　认　书

SPECIFICATION FOR APPROVAL

客 户 名 称

CUSTOMER NAME:

产 品 名 称

PRODUCT NAME: 2.4G\5G-5dBi 剑形 SMA 公头母针黑色天线

客 户 料 号

CUSTOMER P/N:

公 司 料 号

COMPANY P/N: REV: A

	MANUFACTURER SIGNATURE	CUSTOMER SIGNATURE
CHECKED BY:		
APPROVED BY:		
DATE:	2015/11/14	

Contents

ltem ***Description***

1.----------规格表

2.----------成品图

3.----------测试报告

4、 ----------SGS 报告

1．规格表:

产品主要技术参数

主要技术指标		Main technical specifications	
频率范围（MHZ）	2400-2500\ 5150-5825	Frequency Range (MHZ)	2400-2500\ 5150-5825
特性阻抗(Ω)	50	Impedance(Ω)	50
增益(dBi)	5±0.5	Gain(dBi)	5±0.5
输出电压驻波比	≤1. 92	VSWR	≤1. 92
最大功率	10W	Admitted Power	10W
极化方式	垂直极化	Polarization	Linear,Vertical
连接方式	SMA	Connector Type	SMA
物理性能		Physical Properties	
天线本体材料	ABS	Antenna Base	ABS
工作温度	-20℃~+65℃	Operating Temp	-20℃~+65℃
保存温度	-30℃~+75℃	Storage Temp	-30℃~+75℃

Manufacturer:Shenzhen I-Pivot Intelligent Technology Co., Ltd
Address:2nd Floor, Building 2A, Dacheng Industrial Zone, No. 357 Jihua Rd, Longgang District, Shenzhen, Guangdong, China

2．成品图：

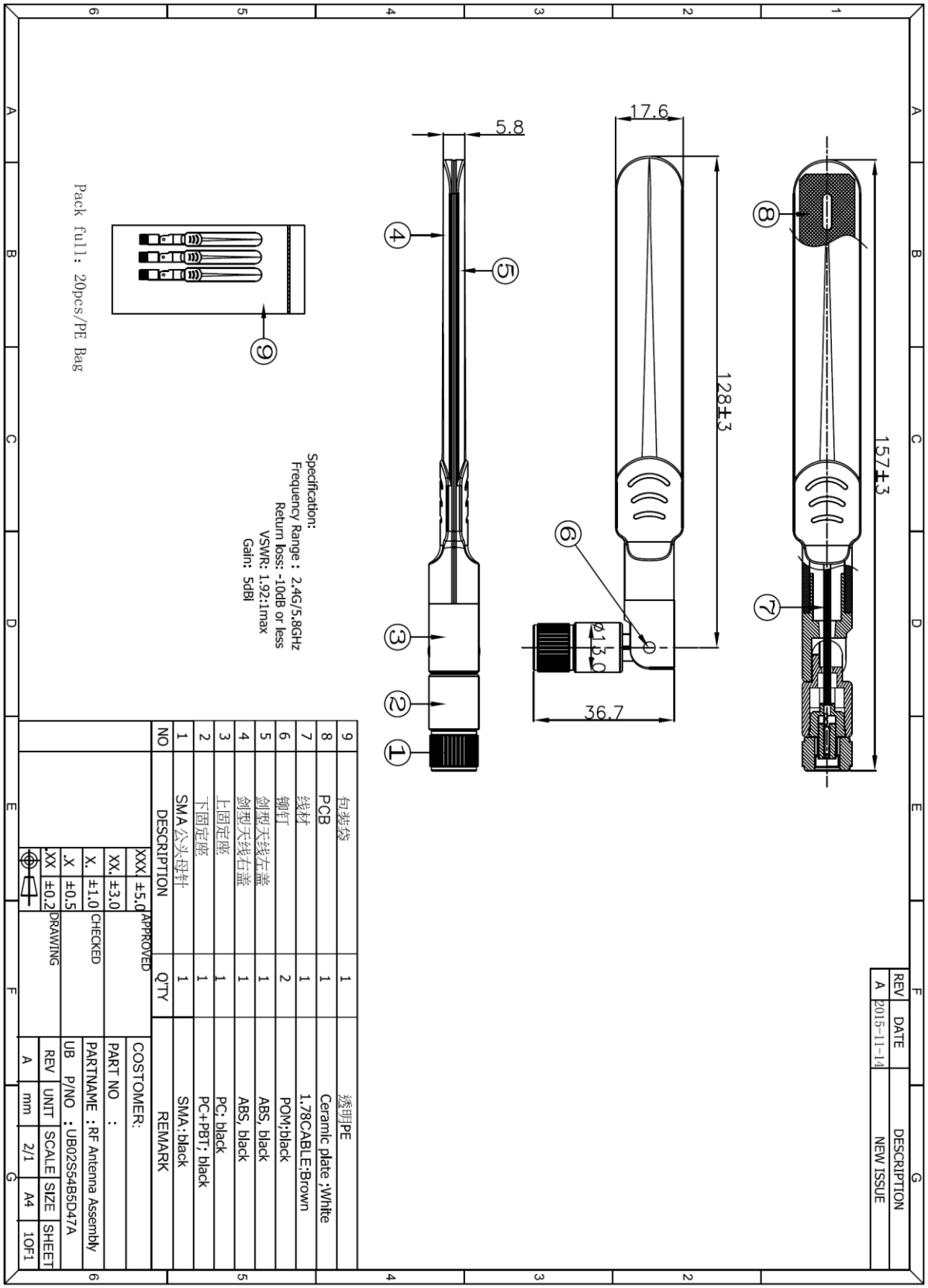
157±3
128±3
17.6
36.7
5.8
Ø13.0
Specification:
Frequency Range : 2.4G/5.8GHz
Return loss: -10dB or less
VSWR: 1.92:1max
Gain: 5dBi
Pack full: 20pcs/PE Bag
9 包装袋 1 透明PE
8 PCB 1 Ceramic plate ;White
7 线材 1 1.78CABLE:Brown
6 铆钉 2 POM;black
5 剑型天线左盖 1 ABS, black
4 剑型天线右盖 1 ABS, black
3 上固定座 1 PC; black
2 下固定座 1 PC+PBT; black
1 SMA 公头母转 1 SMA:black
NO DESCRIPTION QTY REMARK
XXX ±5.0
XX. ±3.0
X. ±1.0
.X ±0.5
.XX ±0.2
APPROVED
CHECKED
DRAWING
COSTOMER:
PART NO :
PARTNAME : RF Antenna Assembly
UB P/NO : UB02S54B5D47A
REV UNIT SCALE SIZE SHEET
A mm 2/1 A4 1OF1
REV DATE DESCRIPTION
A 2015-11-14 NEW ISSUE

3. 测试报告

3.1：网络分析仪测试报告:

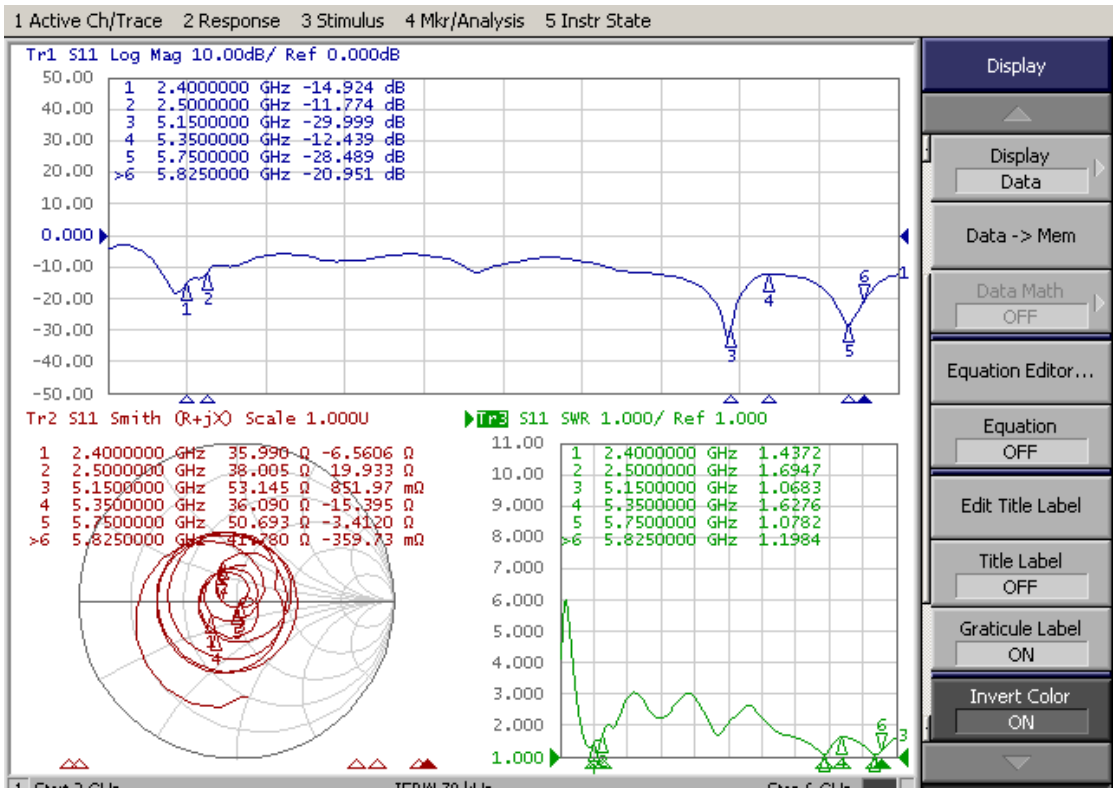

3.2：暗室 2D、3DRaditation Pattern

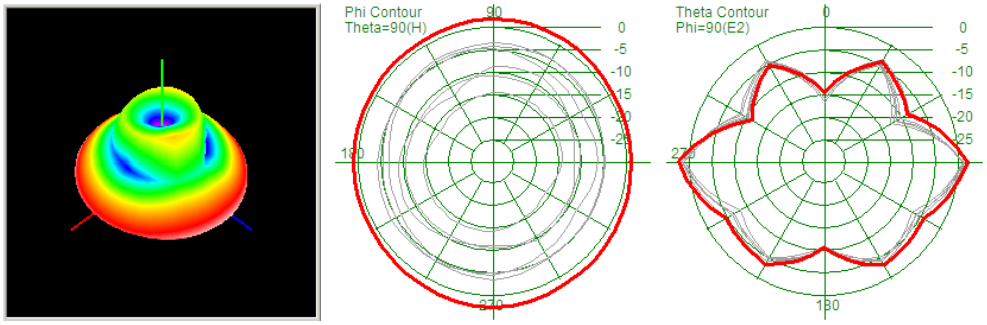

2.4GHz Gain: 4.83dBi Efficiency:71.38%

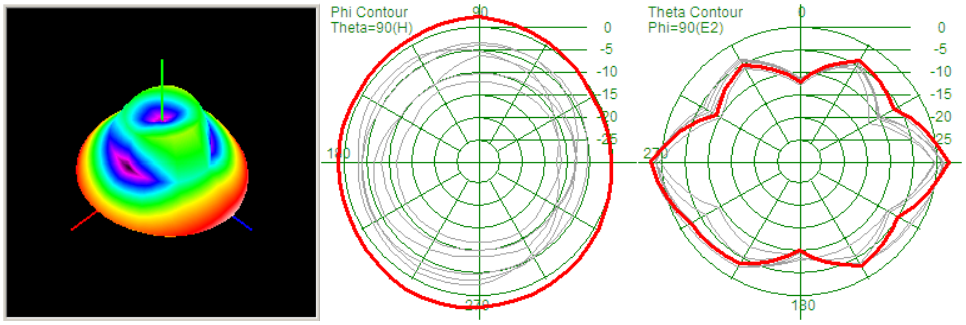

2.45GHz Gain: 4.85dBi Efficiency: 71.56%

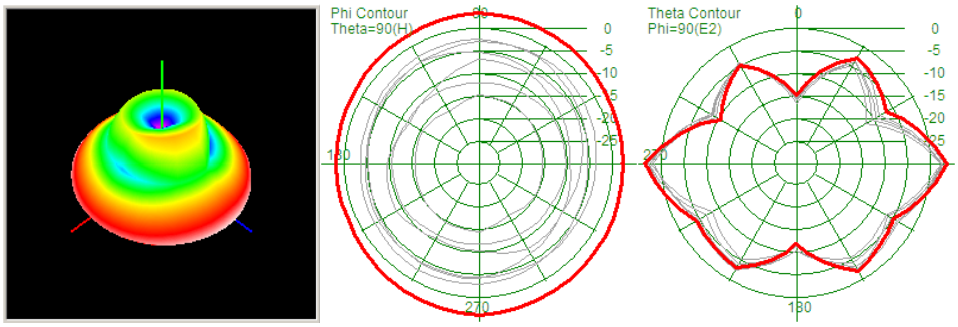

2.5GHz Gain: 4.92dBi Efficiency: 72.19%

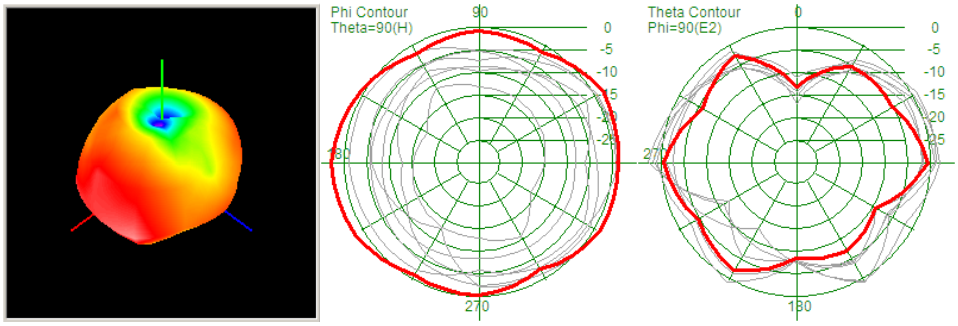

5.15GHz Gain: 5.06dBi Efficiency: 73.34%

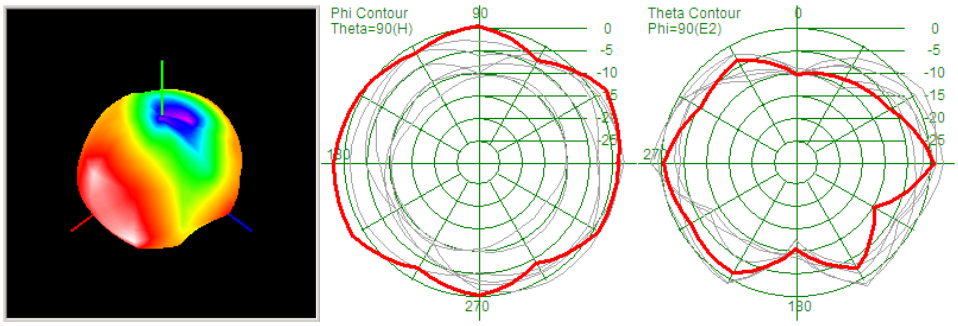

5.35GHz Gain: 5.17dBi Efficiency: 73.23%

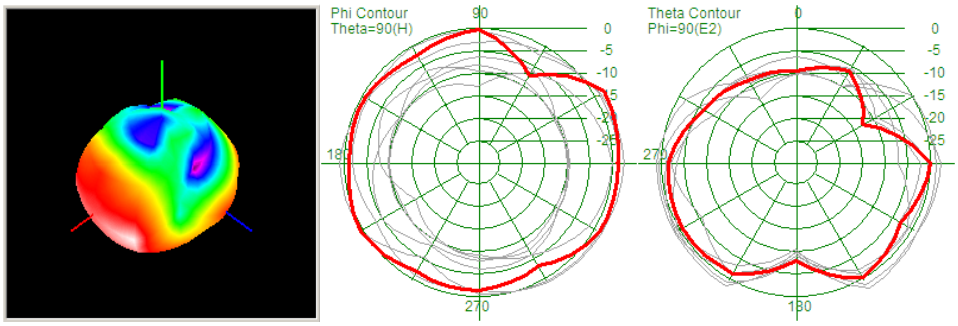

5.75GHz Gain:5.21dBi Efficiency: 74.18%

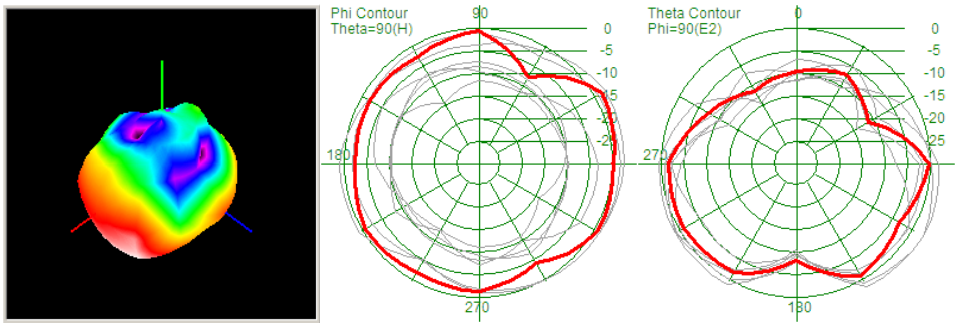

5.825GHz Gain: 5.28dBi Efficiency: 75.25%

Frequency ID	1	2	3	4	5	6	7
Frequency(MHz)	2400.0	2450.0	2500.0	5150.0	5350.0	5750.0	5825.0
Gain (dBi)	4.83	4.85	4.92	5.06	5.17	5.21	5.28
Efficiency (%)	71.38	71.56	72.19	73.34	73.23	74.18	75.25

4.SGS 报告：

Verification Report

Applicant : **DONGGUAN UB ELECTRONIC COMPANY LIMITED**

Address : **3-4 FLOOR,NUMBER 1 SOUTHWEST ROAD,SHEK KWU INDUSTRIAL ZONE TANGXIA** TOWN,DONGGUAN CITY
CHINA

Sample Name :	Transformer
SGS Job No. :	CP12-056425 - SZ
Tested Basic Model No. (P.O. No.) :	UBXXXXXXXX
Date of Sample Received :	29 Nov 2014
Verification Period :	29 Nov 2014 -07 Jan 2015
Verification Requested :	With reference to RoHS Directive 2011/65/EU, and its amendment directives
Verification Method :	Please refer to next page(s).
Verification Result :	Please refer to next page(s).
Verification Conclusion :	Based on the review of previous reports and verification results of the submitted samples, the results of Cadmium, Lead, Mercury, Hexavalent chromium, Polybrominated biphenyls (PBBs), Polybrominated diphenyl ethers (PBDEs) comply with the limits as set by RoHS Directive 2011/65/EU recasting 2002/95/EC.
Note :	The test results are related only to the tested items. The report shall not be reproduced except in full without the written approval of the testing laboratory.

Signed for and on behalf of
SGS-CSTC Ltd.

Jenny

JENNY LIAO

Approved Signatory

This document is issued by the Company subject to its General Conditions of Service printed overleaf, available on request or accessible at http://www.sgs.com/terms_and_conditions.htm and,for electronic format documents,subject to Terms and Conditions for Electronic Documents at www.sgs.com/terms e-document.htm. Attention is drawn to the limitation of liability, indemnification and jurisdiction issues defined therein. Any holder of this document is advised that information contained hereon reflects the Company's findings at the time of its intervention only and within the limits of Client's instructions, if any. The Company's sole responsibility is to its Client and this document does not exonerate parties to a transaction from exercising all their rights and obligations under the transaction documents. This document cannot be reproduced except in full,without prior written approval of the Company. Any unauthorized alteration, forgery or falsification of the content or appearance of this document is unlawful and offenders may be prosecuted to the fullest extent of the law. Unless otherwise stated the results shown in this test report refer only to the sample(s) tested.

SGS-CSTC Standards Technical Services Co., Ltd. Guangzhou Branch Chemical Laboratory
198 Kezhu Road,Scienlech Park Guangzhou Economic & Technology Development Disirid,Guangzhou,China 510663 t (86-20) 82155555 f (86-20) 82075113 www.cn.sgs.com
中国·广州·经济技术开发区科学城科珠路198号 邮编: 510663 t (86-20) 82155555 f (86-20) 82075113 e sgs.china@sgs.com

Verification Method :

1.Review was performed for the samples disjointed from the submitted articles and the related test reports submitted by the Applicant

2.Tests were performed for the samples indicated by the photos in the report with test methods reference to IEC 62321:2008: Procedures for the Determination of Levels of Six Regulated Substances in Electrotechnical Products

(1) Screening by XRF Spectroscopy

(2) Wet Chemical Test Method

a. Determination of Lead & Cadmium by ICP-OES or AAS

b. Determination of Mercury by ICP-OES

c. Determination of Hexavalent Chromium by Spot test or Colorimetric Method

d. Determination of PBBs and PBDEs by GC-MS

This document is issued by the Company subject to its General Conditions of Service printed overleaf, available on request or accessible at http://www.sgs.com/terms_and_conditions.htm and,for electronic format documents,subject to Terms and Conditions for Electronic Documents at www.sgs.com/terms_e-document.htm. Attention is drawn to the limitation of liability, indemnification and jurisdiction issues defined therein. Any holder of this document is advised that information contained hereon reflects the Company's findings at the time of its intervention only and within the limits of Client's instructions, if any. The Company's sole responsibility is to its Client and this document does not exonerate parties to a transaction from exercising all their rights and obligations under the transaction documents. This document cannot be reproduced except in full,without prior written approval of the Company. Any unauthorized alteration, forgery or falsification of the content or appearance of this document is unlawful and offenders may be prosecuted to the fullest extent of the law. Unless otherwise stated the results shown in this test report refer only to the sample(s) tested .

SGS-CSTC Standards Technical Services Co., Ltd. Guangzhou Branch Chemical Laboratory
198 Kezhu Road,Scientech Park Guangzhou Economic & Technology Development District,Guangzhou,China 510663 t (86-20) 82155555 f (86-20) 82075113 www.cn.sgs.com
中国 ·广州 ·经济技术开发区科学城科珠路198号 邮编: 510663 t (86-20) 82155555 f (86-20) 82075113 e sgs.china@sgs.com

Part No.	Part Descripton	BOM No.	Restricted Substamces	Results of EDXRF (1)	Result of Wet Chemical Testing(2) (mg/kg)	Conclusion on EU RoHS	Sample Submittedl Resubmtted Date
1	White plastic shell		Pb	BL	---	Comply	29 Nov 2014
			Cd	BL	---	Comply	
			Hg	BL	---	Comply	
			Cr(VI)	BL	---	Comply	
			PBBs	BL	---	Comply	
			PBDEs	BL	---	Comply	
2	White plastic part (connected w/ No.1)		Pb	BL	---	Comply	29 Nov 2014
			Cd	BL	---	Comply	
			Hg	BL	---	Comply	
			Cr(VI)	BL	---	Comply	
			PBBs	BL	---	Comply	
			PBDEs	BL	---	Comply	
3	White plastic nut (connected w/ No.2)		Pb	BL	---	Comply	29 Nov 2014
			Cd	BL	---	Comply	
			Hg	BL	---	Comply	
			Cr(VI)	BL	---	Comply	
			PBBs	BL	---	Comply	
			PBDEs	BL	---	Comply	
4	Silvery metal nut (in No.3)		Pb	OL	29264▲	Comply	29 Nov 2014
			Cd	BL	---	Comply	
			Hg	BL	---	Comply	
			Cr(VI)	BL	---	Comply	
			PBBs	---	---	---	
			PBDEs	---	---	---	

This document is issued by the Company subject to its General Conditions of Service printed overleaf, available on request or accessible at http://www.sgs.com/terms_and_conditions.htm and,for electronic format documents,subject to Terms and Conditions for Electronic Documents at www.sgs.com/terms_e-document.htm. Attention is drawn to the limitation of liability, indemnification and jurisdiction issues defined therein. Any holder of this document is advised that information contained hereon reflects the Company's findings at the time of its intervention only and within the limits of Client's instructions, if any. The Company's sole responsibility is to its Client and this document does not exonerate parties to a transaction from exercising all their rights and obligations under the transaction documents. This document cannot be reproduced except in full,without prior written approval of the Company. Any unauthorized alteration, forgery or falsification of the content or appearance of this document is unlawful and offenders may be prosecuted to the fullest extent of the law. Unless otherwise stated the results shown in this test report refer only to the sample(s) tested .

SGS-CSTC Standards Technical Services Co., Ltd. Guangzhou Branch Chemical Laboratory
198 Kezhu Road,Scientech Park Guangzhou Economic & Technology Development District,Guangzhou,China 510663 t (86-20) 82155555 f (86-20) 82075113 www.cn.sgs.com
中国·广州·经济技术开发区科学城科珠路198号 邮编: 510663 t (86-20) 82155555 f (86-20) 82075113 e sgs.china@sgs.com

Part No.	Part Descripton	BOM No.	Restricted Substamces	Results of EDXRF (1)	Result of Wet Chemical Testing(2) (mg/kg)	Conclusion on EU RoHS	Sample Submittedl Resubmtted Date
5	Silvery metal tube (connected w/ No.4)		Pb	OL	34278▲	Comply	29 Nov 2014
			Cd	BL	---	Comply	
			Hg	BL	---	Comply	
			Cr(VI)	BL	---	Comply	
			PBBs	---	---	---	
			PBDEs	---	---	---	
6 -C	Silvery metal ring (in No.4)		Pb	OL	28984▲	Comply	29 Nov 2014
			Cd	BL	---	Comply	
			Hg	BL	---	Comply	
			Cr(VI)	BL	---	Comply	
			PBBs	---	---	---	
			PBDEs	---	---	---	
7	White plastic ring (in No.4)		Pb	BL	---	Comply	29 Nov 2014
			Cd	BL	---	Comply	
			Hg	BL	---	Comply	
			Cr(VI)	BL	---	Comply	
			PBBs	BL	---	Comply	
			PBDEs	BL	---	Comply	
8	Red rubber ring (in No.4)		Pb	BL	---	Comply	29 Nov 2014
			Cd	BL	---	Comply	
			Hg	BL	---	Comply	
			Cr(VI)	BL	---	Comply	
			PBBs	BL	---	Comply	
			PBDEs	BL	---	Comply	

This document is issued by the Company subject to its General Conditions of Service printed overleaf, available on request or accessible at http://www.sgs.com/terms_and_conditions.htm and,for electronic format documents,subject to Terms and Conditions for Electronic Documents at www.sgs.com/terms_e-document.htm. Attention is drawn to the limitation of liability, indemnification and jurisdiction issues defined therein. Any holder of this document is advised that information contained hereon reflects the Company's findings at the time of its intervention only and within the limits of Client's instructions, if any. The Company's sole responsibility is to its Client and this document does not exonerate parties to a transaction from exercising all their rights and obligations under the transaction documents. This document cannot be reproduced except in full,without prior written approval of the Company. Any unauthorized alteration, forgery or falsification of the content or appearance of this document is unlawful and offenders may be prosecuted to the fullest extent of the law. Unless otherwise stated the results shown in this test report refer only to the sample(s) tested .

SGS-CSTC Standards Technical Services Co., Ltd. Guangzhou Branch Chemical Laboratory
198 Kezhu Road,Scientech Park Guangzhou Economic & Technology Development District,Guangzhou,China 510663 t (86-20) 82155555 f (86-20) 82075113 www.cn.sgs.com
中国·广州·经济技术开发区科学城科珠路198号 邮编: 510663 t (86-20) 82155555 f (86-20) 82075113 e sgs.china@sgs.com

Part No.	Part Descripton	BOM No.	Restricted Substamces	Results of EDXRF (1)	Result of Wet Chemical Testing(2) (mg/kg)	Conclusion on EU RoHS	Sample Submittedl Resubmtted Date
9	White plastic tube (in No.5)		Pb	BL	---	Comply	29 Nov 2014
			Cd	BL	---	Comply	
			Hg	BL	---	Comply	
			Cr(VI)	BL	---	Comply	
			PBBs	BL	---	Comply	
			PBDEs	BL	---	Comply	
10	Golden metal tube (in No.9)		Pb	OL	24932▲	Colmply	29 Nov 2014
			Cd	BL	---	Comply	
			Hg	BL	---	Comply	
			Cr(VI)	BL	---	Comply	
			PBBs	---	---	---	
			PBDEs	---	---	---	
11	Silvery metal part (in No.2)		Pb	BL	---	Comply	29 Nov 2014
			Cd	BL	---	Comply	
			Hg	BL	---	Comply	
			Cr(VI)	BL	---	Comply	
			PBBs	---	---	---	
			PBDEs	---	---	---	
12	Silvery metal tube (in No.11)		Pb	OL	30455▲	Comply	29 Nov 2014
			Cd	BL	---	Comply	
			Hg	BL	---	Comply	
			Cr(VI)	BL	---	Comply	
			PBBs	---	---	---	
			PBDEs	---	---	---	

This document is issued by the Company subject to its General Conditions of Service printed overleaf, available on request or accessible at http://www.sgs.com/terms_and_conditions.htm and,for electronic format documents,subject to Terms and Conditions for Electronic Documents at www.sgs.com/terms_e-document.htm. Attention is drawn to the limitation of liability, indemnification and jurisdiction issues defined therein. Any holder of this document is advised that information contained hereon reflects the Company's findings at the time of its intervention only and within the limits of Client's instructions, if any. The Company's sole responsibility is to its Client and this document does not exonerate parties to a transaction from exercising all their rights and obligations under the transaction documents. This document cannot be reproduced except in full,without prior written approval of the Company. Any unauthorized alteration, forgery or falsification of the content or appearance of this document is unlawful and offenders may be prosecuted to the fullest extent of the law. Unless otherwise stated the results shown in this test report refer only to the sample(s) tested .

SGS-CSTC Standards Technical Services Co., Ltd. Guangzhou Branch Environmental Chemical Laboratory
198 Kezhu Road,Scientech Park Guangzhou Economic & Technology Development District,Guangzhou,China 510663 t (86-20) 82155555 f (86-20) 82075113 www.cn.sgs.com
中国·广州·经济技术开发区科学城科珠路198号 邮编: 510663 t (86-20) 82155555 f (86-20) 82075113 e sgs.china@sgs.com

Part No.	Part Descripton	BOM No.	Restricted Substamces	Results of EDXRF (1)	Result of Wet Chemical Testing(2) (mg/kg)	Conclusion on EU RoHS	Sample Submittedl Resubmtted Date
13	Golden metal rod (in No.1)		Pb	BL	---	Comply	29 Nov 2014
			Cd	BL	---	Comply	
			Hg	BL	---	Comply	
			Cr(VI)	BL	---	Comply	
			PBBs	---	---	---	
			PBDEs	---	---	---	
14	Black foam ring (on No.13)		Pb	BL	---	Comply	29 Nov 2014
			Cd	BL	---	Comply	
			Hg	BL	---	Comply	
			Cr(VI)	BL	---	Comply	
			PBBs	BL	---	Comply	
			PBDEs	BL	---	Comply	
15	Silvery metal rod (connected w/ No.13)		Pb	BL	---	Comply	29 Nov 2014
			Cd	BL	---	Comply	
			Hg	BL	---	Comply	
			Cr(VI)	BL	---	Comply	
			PBBs	---	---	---	
			PBDEs	---	---	---	
16	Black plastic (heat shrinkable tube) (on No.15)		Pb	BL	---	Comply	29 Nov 2014
			Cd	BL	---	Comply	
			Hg	BL	---	Comply	
			Cr(VI)	BL	---	Comply	
			PBBs	BL	---	Comply	
			PBDEs	BL	---	Comply	

This document is issued by the Company subject to its General Conditions of Service printed overleaf, available on request or accessible at http://www.sgs.com/terms_and_conditions.htm and,for electronic format documents,subject to Terms and Conditions for Electronic Documents at www.sgs.com/terms_e-document.htm. Attention is drawn to the limitation of liability, indemnification and jurisdiction issues defined therein. Any holder of this document is advised that information contained hereon reflects the Company's findings at the time of its intervention only and within the limits of Client's instructions, if any. The Company's sole responsibility is to its Client and this document does not exonerate parties to a transaction from exercising all their rights and obligations under the transaction documents. This document cannot be reproduced except in full,without prior written approval of the Company. Any unauthorized alteration, forgery or falsification of the content or appearance of this document is unlawful and offenders may be prosecuted to the fullest extent of the law. Unless otherwise stated the results shown in this test report refer only to the sample(s) tested .

SGS Standards Technical Services Co., Ltd. Guangzhou Branch Chemical Laboratory
198 Kezhu Road,Scientech Park Guangzhou Economic & Technology Development District,Guangzhou,China 510663 t (86-20) 82155555 f (86-20) 82075113 www.cn.sgs.com
中国 ·广州 ·经济技术开发区科学城科珠路198号 邮编: 510663 t (86-20) 82155555 f (86-20) 82075113 e sgs.china@sgs.com

Part No.	Part Descripton	BOM No.	Restricted Substamces	Results of EDXRF (1)	Result of Wet Chemical Testing(2) (mg/kg)	Conclusion on EU RoHS	Sample Submittedl Resubmtted Date
17	Golden metal tube (connected w/ No.16)		Pb	OL	30411▲	Comply	29 Nov 2014
			Cd	BL	---	Comply	
			Hg	BL	---	Comply	
			Cr(VI)	BL	---	Comply	
			PBBs	---	---	---	
			PBDEs	---	---	---	
18	White glue (connected w/ No.16)		Pb	BL	---	Comply	29 Nov 2014
			Cd	BL	---	Comply	
			Hg	BL	---	Comply	
			Cr(VI)	BL	---	Comply	
			PBBs	BL	---	Comply	
			PBDEs	BL	---	Comply	
19	White plastic cover (connected w/ No.17)		Pb	BL	---	Comply	29 Nov 2014
			Cd	BL	---	Comply	
			Hg	BL	---	Comply	
			Cr(VI)	BL	---	Comply	
			PBBs	BL	---	Comply	
			PBDEs	BL	---	Comply	
20	Pink transparent plastic (cable jacket) (connected w/ No.19)		Pb	BL	---	Comply	29 Nov 2014
			Cd	BL	---	Comply	
			Hg	BL	---	Comply	
			Cr(VI)	BL	---	Comply	
			PBBs	BL	---	Comply	
			PBDEs	BL	---	Comply	

This document is issued by the Company subject to its General Conditions of Service printed overleaf, available on request or accessible at http://www.sgs.com/terms_and_conditions.htm and,for electronic format documents,subject to Terms and Conditions for Electronic Documents at www.sgs.com/terms_e-document.htm. Attention is drawn to the limitation of liability, indemnification and jurisdiction issues defined therein. Any holder of this document is advised that information contained hereon reflects the Company's findings at the time of its intervention only and within the limits of Client's instructions, if any. The Company's sole responsibility is to its Client and this document does not exonerate parties to a transaction from exercising all their rights and obligations under the transaction documents. This document cannot be reproduced except in full,without prior written approval of the Company. Any unauthorized alteration, forgery or falsification of the content or appearance of this document is unlawful and offenders may be prosecuted to the fullest extent of the law. Unless otherwise stated the results shown in this test report refer only to the sample(s) tested .

SGS-CSTC Standards Technical Services Co., Ltd. Guangzhou Branch Environmental Chemical Laboratory
198 Kezhu Road,Scientech Park Guangzhou Economic & Technology Development District,Guangzhou,China 510663 t (86-20) 82155555 f (86-20) 82075113 www.cn.sgs.com
中国·广州·经济技术开发区科学城科珠路198号 邮编: 510663 t (86-20) 82155555 f (86-20) 82075113 e sgs.china@sgs.com

Part No.	Part Descripton	BOM No.	Restricted Substamces	Results of EDXRF (1)	Result of Wet Chemical Testing(2) (mg/kg)	Conclusion on EU RoHS	Sample Submittedl Resubmtted Date
21	Silvery metal wire (in No.20)		Pb	BL	---	Comply	29 Nov 2014
			Cd	BL	---	Comply	
			Hg	BL	---	Comply	
			Cr(VI)	BL	---	Comply	
			PBBs	---	---	---	
			PBDEs	---	---	---	
22	White plastic (wire insulation) (in No.21)		Pb	BL	---	Comply	29 Nov 2014
			Cd	BL	---	Comply	
			Hg	BL	---	Comply	
			Cr(VI)	BL	---	Comply	
			PBBs	BL	---	Comply	
			PBDEs	BL	---	Comply	
23	Black plastic shell		Pb	BL	---	Comply	29 Nov 2014
			Cd	BL	---	Comply	
			Hg	BL	---	Comply	
			Cr(VI)	BL	---	Comply	
			PBBs	BL	---	Comply	
			PBDEs	BL	---	Comply	
24	Black plastic part (connected w/ No.23)		Pb	BL	---	Comply	29 Nov 2014
			Cd	BL	---	Comply	
			Hg	BL	---	Comply	
			Cr(VI)	BL	---	Comply	
			PBBs	BL	---	Comply	
			PBDEs	BL	---	Comply	

This document is issued by the Company subject to its General Conditions of Service printed overleaf, available on request or accessible at http://www.sgs.com/terms_and_conditions.htm and,for electronic format documents,subject to Terms and Conditions for Electronic Documents at www.sgs.com/terms_e-document.htm. Attention is drawn to the limitation of liability, indemnification and jurisdiction issues defined therein. Any holder of this document is advised that information contained hereon reflects the Company's findings at the time of its intervention only and within the limits of Client's instructions, if any. The Company's sole responsibility is to its Client and this document does not exonerate parties to a transaction from exercising all their rights and obligations under the transaction documents. This document cannot be reproduced except in full,without prior written approval of the Company. Any unauthorized alteration, forgery or falsification of the content or appearance of this document is unlawful and offenders may be prosecuted to the fullest extent of the law. Unless otherwise stated the results shown in this test report refer only to the sample(s) tested .

SGS-CSTC Standards Technical Services Co., Ltd. Guangzhou Branch Chemical Laboratory
198 Kezhu Road,Scientech Park Guangzhou Economic & Technology Development District,Guangzhou,China 510663 t (86-20) 82155555 f (86-20) 82075113 www.cn.sgs.com
中国 ·广州 ·经济技术开发区科学城科珠路198号 邮编: 510663 t (86-20) 82155555 f (86-20) 82075113 e sgs.china@sgs.com

Part No.	Part Descripton	BOM No.	Restricted Substamces	Results of EDXRF (1)	Result of Wet Chemical Testing(2) (mg/kg)	Conclusion on EU RoHS	Sample Submittedl Resubmtted Date
25	Grey plastic (cable jacket) (connected w/ No.24)		Pb	BL	---	Comply	29 Nov 2014
			Cd	BL	---	Comply	
			Hg	BL	---	Comply	
			Cr(VI)	BL	---	Comply	
			PBBs	BL	---	Comply	
			PBDEs	BL	---	Comply	
26	Transparent plastic (wire insulation) (in No.25)		Pb	BL	---	Comply	29 Nov 2014
			Cd	BL	---	Comply	
			Hg	BL	---	Comply	
			Cr(VI)	BL	---	Comply	
			PBBs	BL	---	Comply	
			PBDEs	BL	---	Comply	
27	Golden metal rod (in No.23)		Pb	BL	---	Comply	29 Nov 2014
			Cd	BL	---	Comply	
			Hg	BL	---	Comply	
			Cr(VI)	BL	---	Comply	
			PBBs	---	---	---	
			PBDEs	---	---	---	
28	Silvery metal rod (connected w/ No.27)		Pb	BL	---	Comply	29 Nov 2014
			Cd	BL	---	Comply	
			Hg	BL	---	Comply	
			Cr(VI)	BL	---	Comply	
			PBBs	---	---	---	
			PBDEs	---	---	---	

This document is issued by the Company subject to its General Conditions of Service printed overleaf, available on request or accessible at http://www.sgs.com/terms_and_conditions.htm and,for electronic format documents,subject to Terms and Conditions for Electronic Documents at www.sgs.com/terms_e-document.htm. Attention is drawn to the limitation of liability, indemnification and jurisdiction issues defined therein. Any holder of this document is advised that information contained hereon reflects the Company's findings at the time of its intervention only and within the limits of Client's instructions, if any. The Company's sole responsibility is to its Client and this document does not exonerate parties to a transaction from exercising all their rights and obligations under the transaction documents. This document cannot be reproduced except in full,without prior written approval of the Company. Any unauthorized alteration, forgery or falsification of the content or appearance of this document is unlawful and offenders may be prosecuted to the fullest extent of the law. Unless otherwise stated the results shown in this test report refer only to the sample(s) tested .

SGS-CSTC Standards Technical Services Co., Ltd. Guangzhou Branch Environmental Chemical Laboratory
198 Kezhu Road,Scientech Park Guangzhou Economic & Technology Development District,Guangzhou,China 510663 t (86-20) 82155555 f (86-20) 82075113 www.cn.sgs.com
中国·广州·经济技术开发区科学城科珠路198号 邮编: 510663 t (86-20) 82155555 f (86-20) 82075113 e sgs.china@sgs.com

Part No.	Part Descripton	BOM No.	Restricted Substamces	Results of EDXRF (1)	Result of Wet Chemical Testing(2) (mg/kg)	Conclusion on EU RoHS	Sample Submittedl Resubmtted Date
29	Golden metal tube (connected w/ No.28)		Pb	OL	31558▲	Comply	29 Nov 2014
			Cd	BL	---	Comply	
			Hg	BL	---	Comply	
			Cr(VI)	BL	---	Comply	
			PBBs	---	---	---	
			PBDEs	---	---	---	

This document is issued by the Company subject to its General Conditions of Service printed overleaf, available on request or accessible at http://www.sgs.com/terms_and_conditions.htm and,for electronic format documents,subject to Terms and Conditions for Electronic Documents at www.sgs.com/terms_e-document.htm. Attention is drawn to the limitation of liability, indemnification and jurisdiction issues defined therein. Any holder of this document is advised that information contained hereon reflects the Company's findings at the time of its intervention only and within the limits of Client's instructions, if any. The Company's sole responsibility is to its Client and this document does not exonerate parties to a transaction from exercising all their rights and obligations under the transaction documents. This document cannot be reproduced except in full,without prior written approval of the Company. Any unauthorized alteration, forgery or falsification of the content or appearance of this document is unlawful and offenders may be prosecuted to the fullest extent of the law. Unless otherwise stated the results shown in this test report refer only to the sample(s) tested .

SGS-CSTC Standards Technical Services Co., Ltd. Guangzhou Branch Environmental Chemical Laboratory
198 Kezhu Road,Scientech Park Guangzhou Economic & Technology Development District,Guangzhou,China 510663 t (86-20) 82155555 f (86-20) 82075113 www.cn.sgs.com
中国 ·广州 ·经济技术开发区科学城科珠路198号 邮编: 510663 t (86-20) 82155555 f (86-20) 82075113 e sgs.china@sgs.com

Remark :

(1) (a) There are the results on total Br while test items on restricted substances are PBBs and PBDEs. There is the result on total Cr while test item on restricted substances is Cr(VI).

(b) Results are obtained by EDXRF for primary screening, and further chemical testing by ICP-OES (for Cd, Pb, Hg), UV-Vis (for Cr(VI)) and GC-MS (for PBBs, PBDEs) is recommended to be performed, if the concentration exceeds the below warning value according to IEC62321 (unit: mg/kg)

Element	Polymer	Metal	Composite Materials
Cd	BL ≤(70-3σ)< X <(130+3σ)≤OL	BL ≤(70-3σ)< X <(130+3σ)≤OL	LOD < X <(150+3σ)≤ OL
Pb	BL ≤(700-3σ)< X<(1300+3σ)≤ OL	BL ≤(700-3σ)< X <(1300+3σ)≤ OL	BL ≤(500-3σ)< X<(1500+3σ)≤ OL
Hg	BL ≤(700-3σ)< X <(1300+3σ)≤ OL	BL ≤(700-3σ)< X <(1300+3σ)≤ OL	BL ≤(500-3σ)< X <(1500+3σ)≤ OL
Br	BL ≤ (300-3σ)< X	--	BL ≤ (250-3σ)< X
Cr	BL ≤ (700-3σ)< X	BL ≤ (700-3σ)< X	BL ≤ (500-3σ)< X

(c) BL = Below Limit, OL = Over Limit, IN = Inconclusive, LOD = Limit of Detection, -- = Not regulated.

(d) The XRF screening test for RoHS elements - The reading may be different to the actual content in the sample be of non-uniformity composition.

(2) (a) mg/kg = 0.0001%, MDL = Method detection Limit, ND = Not Detected (<MDL), --- = Not conducted, - = Without BOM.

(b) Unit and MDL in wet chemical test

Test Item	Pb	Cd	Hg
Unit	mg/kg	mg/kg	mg/kg
MDL	2	2	2

The MDL for single compound of PBBs and PBDEs is 5 mg/kg, MDL of Cr(VI) for polymer and composite sample is 2 mg/kg.

(c) According to IEC 62321:2008, result on Cr(VI) for metal sample is shown as Positive/Negative. Negative = Absence of Cr(VI) coating, Positive = Presence of Cr(VI) coating.

This document is issued by the Company subject to its General Conditions of Service printed overleaf, available on request or accessible at http://www.sgs.com/terms_and_conditions.htm and,for electronic format documents,subject to Terms and Conditions for Electronic Documents at www.sgs.com/terms_e-document.htm. Attention is drawn to the limitation of liability, indemnification and jurisdiction issues defined therein. Any holder of this document is advised that information contained hereon reflects the Company's findings at the time of its intervention only and within the limits of Client's instructions, if any. The Company's sole responsibility is to its Client and this document does not exonerate parties to a transaction from exercising all their rights and obligations under the transaction documents. This document cannot be reproduced except in full,without prior written approval of the Company. Any unauthorized alteration, forgery or falsification of the content or appearance of this document is unlawful and offenders may be prosecuted to the fullest extent of the law. Unless otherwise stated the results shown in this test report refer only to the sample(s) tested .

SGS-CSTC Standards Technical Services Co., Ltd. Guangzhou Branch Environmental Chemical Laboratory
198 Kezhu Road,Scientech Park Guangzhou Economic & Technology Development District,Guangzhou,China 510663 t (86-20) 82155555 f (86-20) 82075113 www.cn.sgs.com
中国 ·广州 ·经济技术开发区科学城科珠路198号 邮编: 510663 t (86-20) 82155555 f (86-20) 82075113 e sgs.china@sgs.com

(d)▲= According to the declaration from the client,
Lead (Pb) in No.4, No.5, No.6-C, No.10, No.12, No.17 & No.29 are exempted by EU RoHS Directive 2011/65/EU based on: Copper alloy containing up to 4 % lead by weight.

This document is issued by the Company subject to its General Conditions of Service printed overleaf, available on request or accessible at http://www.sgs.com/terms_and_conditions.htm and,for electronic format documents,subject to Terms and Conditions for Electronic Documents at www.sgs.com/terms_e-document.htm. Attention is drawn to the limitation of liability, indemnification and jurisdiction issues defined therein. Any holder of this document is advised that information contained hereon reflects the Company's findings at the time of its intervention only and within the limits of Client's instructions, if any. The Company's sole responsibility is to its Client and this document does not exonerate parties to a transaction from exercising all their rights and obligations under the transaction documents. This document cannot be reproduced except in full,without prior written approval of the Company. Any unauthorized alteration, forgery or falsification of the content or appearance of this document is unlawful and offenders may be prosecuted to the fullest extent of the law. Unless otherwise stated the results shown in this test report refer only to the sample(s) tested .

SGS-CSTC Standards Technical Services Co., Ltd. Guangzhou Branch Environmental Chemical Laboratory
198 Kezhu Road,Scientech Park Guangzhou Economic & Technology Development District,Guangzhou,China 510663 t (86-20) 82155555 f (86-20) 82075113 www.cn.sgs.com
中国 ·广州 ·经济技术开发区科学城科珠路198号 邮编: 510663 t (86-20) 82155555 f (86-20) 82075113 e sgs.china@sgs.com

Sample photo:

CANEC1216278501

UBXXXXXXXX

CANEC1216278501

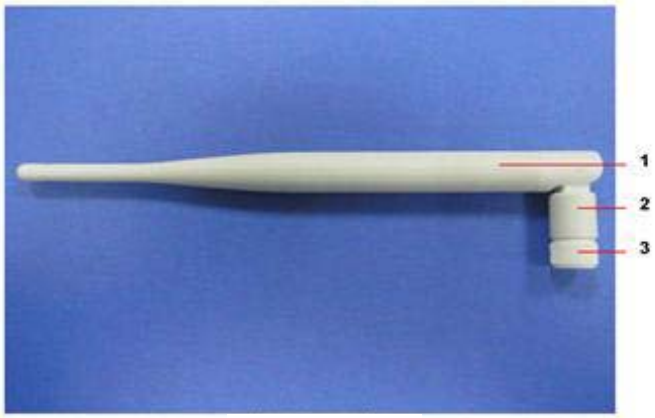

UBXXXXXXXX

This document is issued by the Company subject to its General Conditions of Service printed overleaf, available on request or accessible at http://www.sgs.com/terms_and_conditions.htm and,for electronic format documents,subject to Terms and Conditions for Electronic Documents at www.sgs.com/terms_e-document.htm. Attention is drawn to the limitation of liability, indemnification and jurisdiction issues defined therein. Any holder of this document is advised that information contained hereon reflects the Company's findings at the time of its intervention only and within the limits of Client's instructions, if any. The Company's sole responsibility is to its Client and this document does not exonerate parties to a transaction from exercising all their rights and obligations under the transaction documents. This document cannot be reproduced except in full,without prior written approval of the Company. Any unauthorized alteration, forgery or falsification of the content or appearance of this document is unlawful and offenders may be prosecuted to the fullest extent of the law. Unless otherwise stated the results shown in this test report refer only to the sample(s) tested .

SGS-CSTC Standards Technical Services Co., Ltd. Guangzhou Branch Analytical Chemical Laboratory
198 Kezhu Road,Scientech Park Guangzhou Economic & Technology Development District,Guangzhou,China 510663 t (86-20) 82155555 f (86-20) 82075113 www.cn.sgs.com
中国 ·广州 ·经济技术开发区科学城科珠路198号 邮编: 510663 t (86-20) 82155555 f (86-20) 82075113 e sgs.china@sgs.com

CANEC1216278501

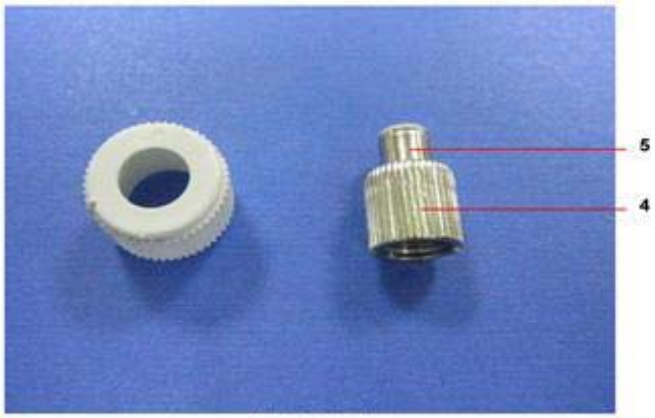

UBXXXXXXXX

CANEC1216278501

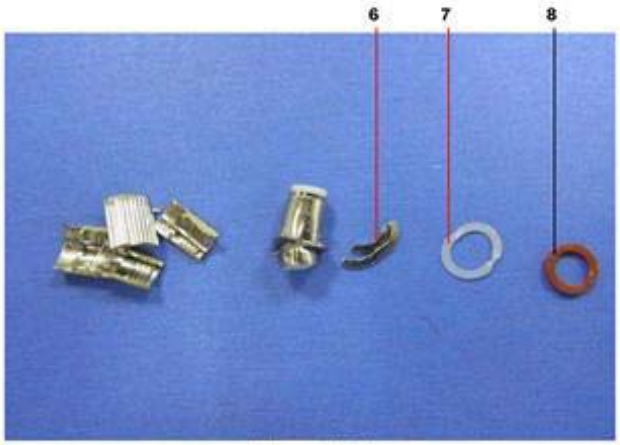

UBXXXXXXXX

This document is issued by the Company subject to its General Conditions of Service printed overleaf, available on request or accessible at http://www.sgs.com/terms_and_conditions.htm and,for electronic format documents,subject to Terms and Conditions for Electronic Documents at www.sgs.com/terms_e-document.htm. Attention is drawn to the limitation of liability, indemnification and jurisdiction issues defined therein. Any holder of this document is advised that information contained hereon reflects the Company's findings at the time of its intervention only and within the limits of Client's instructions, if any. The Company's sole responsibility is to its Client and this document does not exonerate parties to a transaction from exercising all their rights and obligations under the transaction documents. This document cannot be reproduced except in full,without prior written approval of the Company. Any unauthorized alteration, forgery or falsification of the content or appearance of this document is unlawful and offenders may be prosecuted to the fullest extent of the law. Unless otherwise stated the results shown in this test report refer only to the sample(s) tested .

SGS-CSTC Standards Technical Services Co., Ltd. Guangzhou Branch Environmental Chemical Laboratory
198 Kezhu Road,Scientech Park Guangzhou Economic & Technology Development District,Guangzhou,China 510663 t (86-20) 82155555 f (86-20) 82075113 www.cn.sgs.com
中国 ·广州 ·经济技术开发区科学城科珠路198号 邮编: 510663 t (86-20) 82155555 f (86-20) 82075113 e sgs.china@sgs.com

CANEC1216278501

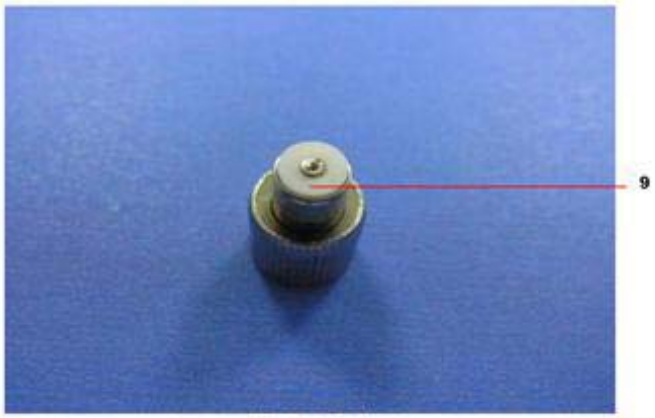

UBXXXXXXXX

CANEC1216278501

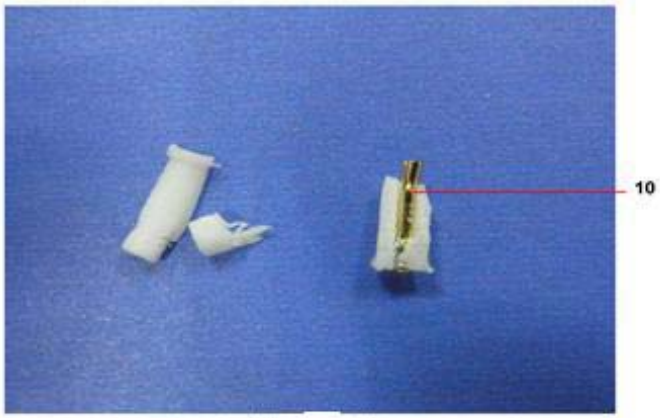

UBXXXXXXXX

This document is issued by the Company subject to its General Conditions of Service printed overleaf, available on request or accessible at http://www.sgs.com/terms_and_conditions.htm and,for electronic format documents,subject to Terms and Conditions for Electronic Documents at www.sgs.com/terms_e-document.htm. Attention is drawn to the limitation of liability, indemnification and jurisdiction issues defined therein. Any holder of this document is advised that information contained hereon reflects the Company's findings at the time of its intervention only and within the limits of Client's instructions, if any. The Company's sole responsibility is to its Client and this document does not exonerate parties to a transaction from exercising all their rights and obligations under the transaction documents. This document cannot be reproduced except in full,without prior written approval of the Company. Any unauthorized alteration, forgery or falsification of the content or appearance of this document is unlawful and offenders may be prosecuted to the fullest extent of the law. Unless otherwise stated the results shown in this test report refer only to the sample(s) tested .

SGS-CSTC Standards Technical Services Co., Ltd. Guangzhou Branch Analytical Chemical Laboratory
198 Kezhu Road,Scientech Park Guangzhou Economic & Technology Development District,Guangzhou,China 510663 t (86-20) 82155555 f (86-20) 82075113 www.cn.sgs.com
中国 ·广州 ·经济技术开发区科学城科珠路198号 邮编: 510663 t (86-20) 82155555 f (86-20) 82075113 e sgs.china@sgs.com

CANEC1216278501

UBXXXXXXXX

CANEC1216278501

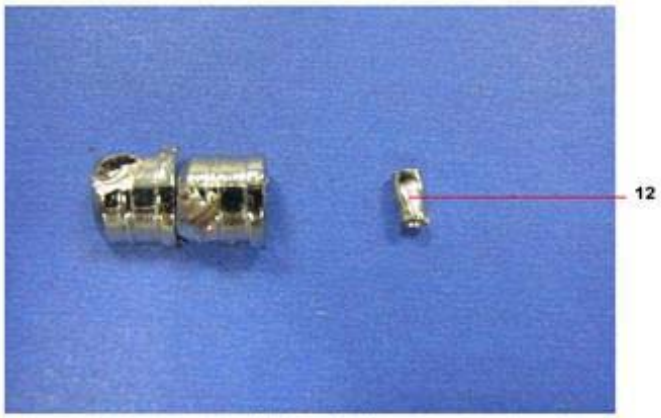

UBXXXXXXXX

This document is issued by the Company subject to its General Conditions of Service printed overleaf, available on request or accessible at http://www.sgs.com/terms_and_conditions.htm and,for electronic format documents,subject to Terms and Conditions for Electronic Documents at www.sgs.com/terms_e-document.htm. Attention is drawn to the limitation of liability, indemnification and jurisdiction issues defined therein. Any holder of this document is advised that information contained hereon reflects the Company's findings at the time of its intervention only and within the limits of Client's instructions, if any. The Company's sole responsibility is to its Client and this document does not exonerate parties to a transaction from exercising all their rights and obligations under the transaction documents. This document cannot be reproduced except in full,without prior written approval of the Company. Any unauthorized alteration, forgery or falsification of the content or appearance of this document is unlawful and offenders may be prosecuted to the fullest extent of the law. Unless otherwise stated the results shown in this test report refer only to the sample(s) tested .

SGS-CSTC Standards Technical Services Co., Ltd. Guangzhou Branch Analytical Chemical Laboratory
198 Kezhu Road,Scientech Park Guangzhou Economic & Technology Development District,Guangzhou,China 510663 t (86-20) 82155555 f (86-20) 82075113 www.cn.sgs.com
中国 ·广州 ·经济技术开发区科学城科珠路198号 邮编: 510663 t (86-20) 82155555 f (86-20) 82075113 e sgs.china@sgs.com

CANEC1216278501

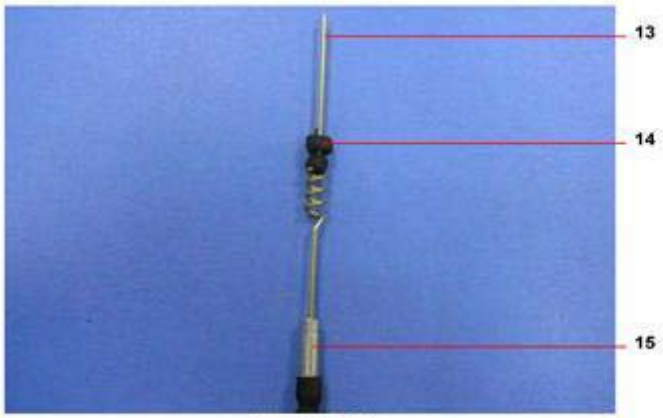

UBXXXXXXXX

CANEC1216278501

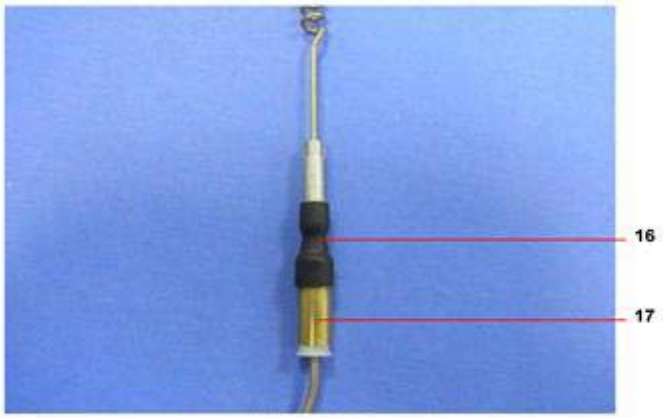

UBXXXXXXXX

This document is issued by the Company subject to its General Conditions of Service printed overleaf, available on request or accessible at http://www.sgs.com/terms_and_conditions.htm and,for electronic format documents,subject to Terms and Conditions for Electronic Documents at www.sgs.com/terms_e-document.htm. Attention is drawn to the limitation of liability, indemnification and jurisdiction issues defined therein. Any holder of this document is advised that information contained hereon reflects the Company's findings at the time of its intervention only and within the limits of Client's instructions, if any. The Company's sole responsibility is to its Client and this document does not exonerate parties to a transaction from exercising all their rights and obligations under the transaction documents. This document cannot be reproduced except in full,without prior written approval of the Company. Any unauthorized alteration, forgery or falsification of the content or appearance of this document is unlawful and offenders may be prosecuted to the fullest extent of the law. Unless otherwise stated the results shown in this test report refer only to the sample(s) tested .

SGS-CSTC Standards Technical Services Co., Ltd. Guangzhou Branch Analytical Chemical Laboratory
198 Kezhu Road,Scientech Park Guangzhou Economic & Technology Development District,Guangzhou,China 510663 t (86-20) 82155555 f (86-20) 82075113 www.cn.sgs.com
中国 ·广州 ·经济技术开发区科学城科珠路198号 邮编: 510663 t (86-20) 82155555 f (86-20) 82075113 e sgs.china@sgs.com

CANEC1216278501

UBXXXXXXXX

CANEC1216278501

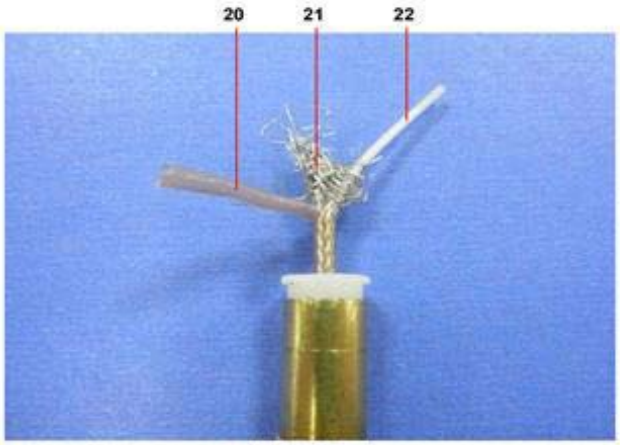

UBXXXXXXXX

This document is issued by the Company subject to its General Conditions of Service printed overleaf, available on request or accessible at http://www.sgs.com/terms_and_conditions.htm and,for electronic format documents,subject to Terms and Conditions for Electronic Documents at www.sgs.com/terms_e-document.htm. Attention is drawn to the limitation of liability, indemnification and jurisdiction issues defined therein. Any holder of this document is advised that information contained hereon reflects the Company's findings at the time of its intervention only and within the limits of Client's instructions, if any. The Company's sole responsibility is to its Client and this document does not exonerate parties to a transaction from exercising all their rights and obligations under the transaction documents. This document cannot be reproduced except in full,without prior written approval of the Company. Any unauthorized alteration, forgery or falsification of the content or appearance of this document is unlawful and offenders may be prosecuted to the fullest extent of the law. Unless otherwise stated the results shown in this test report refer only to the sample(s) tested .

SGS-CSTC Standards Technical Services Co., Ltd. Guangzhou Branch Analytical Chemical Laboratory
198 Kezhu Road,Scientech Park Guangzhou Economic & Technology Development District,Guangzhou,China 510663 t (86-20) 82155555 f (86-20) 82075113 www.cn.sgs.com
中国 ·广州 ·经济技术开发区科学城科珠路198号 邮编: 510663 t (86-20) 82155555 f (86-20) 82075113 e sgs.china@sgs.com

CANEC1216278501

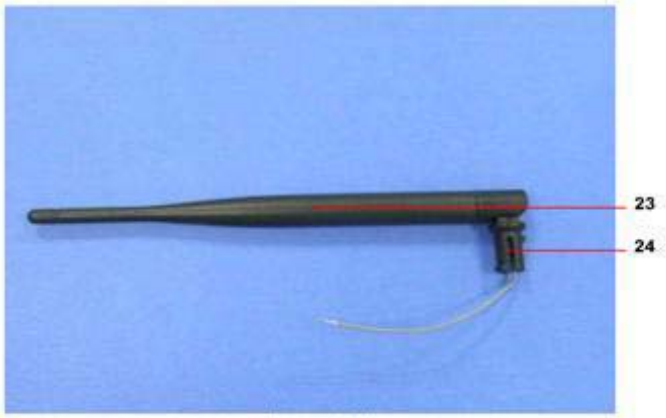

UBXXXXXXXX

CANEC1216278501

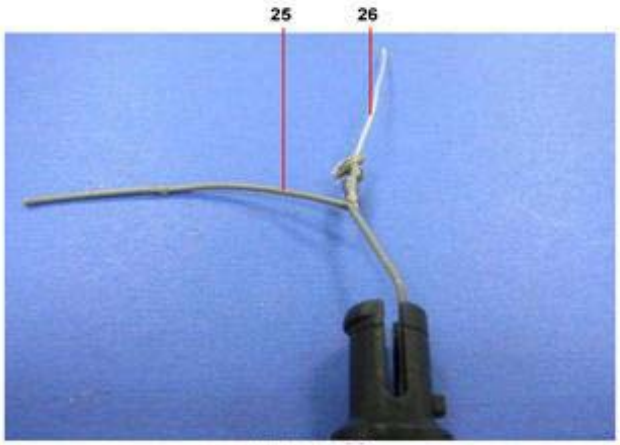

UBXXXXXXXX

This document is issued by the Company subject to its General Conditions of Service printed overleaf, available on request or accessible at http://www.sgs.com/terms_and_conditions.htm and,for electronic format documents,subject to Terms and Conditions for Electronic Documents at www.sgs.com/terms_e-document.htm. Attention is drawn to the limitation of liability, indemnification and jurisdiction issues defined therein. Any holder of this document is advised that information contained hereon reflects the Company's findings at the time of its intervention only and within the limits of Client's instructions, if any. The Company's sole responsibility is to its Client and this document does not exonerate parties to a transaction from exercising all their rights and obligations under the transaction documents. This document cannot be reproduced except in full,without prior written approval of the Company. Any unauthorized alteration, forgery or falsification of the content or appearance of this document is unlawful and offenders may be prosecuted to the fullest extent of the law. Unless otherwise stated the results shown in this test report refer only to the sample(s) tested .

SGS-CSTC Standards Technical Services Co., Ltd. Guangzhou Branch Analytical Chemical Laboratory
198 Kezhu Road,Scientech Park Guangzhou Economic & Technology Development District,Guangzhou,China 510663 t (86-20) 82155555 f (86-20) 82075113 www.cn.sgs.com
中国 ·广州 ·经济技术开发区科学城科珠路198号 邮编: 510663 t (86-20) 82155555 f (86-20) 82075113 e sgs.china@sgs.com

CANEC1216278501

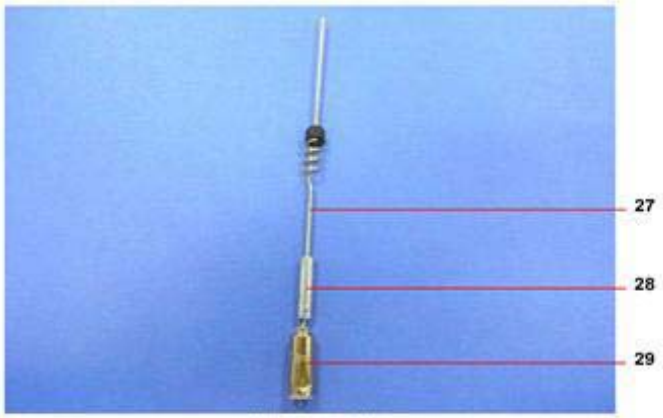

UBXXXXXXXX

SGS authenticate the photo on original report only

*** End of Report ***

This document is issued by the Company subject to its General Conditions of Service printed overleaf, available on request or accessible at http://www.sgs.com/terms_and_conditions.htm and,for electronic format documents,subject to Terms and Conditions for Electronic Documents at www.sgs.com/terms_e-document.htm. Attention is drawn to the limitation of liability, indemnification and jurisdiction issues defined therein. Any holder of this document is advised that information contained hereon reflects the Company's findings at the time of its intervention only and within the limits of Client's instructions, if any. The Company's sole responsibility is to its Client and this document does not exonerate parties to a transaction from exercising all their rights and obligations under the transaction documents. This document cannot be reproduced except in full,without prior written approval of the Company. Any unauthorized alteration, forgery or falsification of the content or appearance of this document is unlawful and offenders may be prosecuted to the fullest extent of the law. Unless otherwise stated the results shown in this test report refer only to the sample(s) tested .

SGS-CSTC Standards Technical Services Co., Ltd. Guangzhou Branch Environmental Chemical Laboratory
198 Kezhu Road,Scientech Park Guangzhou Economic & Technology Development District,Guangzhou,China 510663 t (86-20) 82155555 f (86-20) 82075113 www.cn.sgs.com
中国 ·广州 ·经济技术开发区科学城科珠路198号 邮编: 510663 t (86-20) 82155555 f (86-20) 82075113 e sgs.china@sgs.com