FCC SAR TEST REPORT

Application No:	ZR/2019/50030
Applicant:	MYSKIN, INC
Manufacturer:	mySkin, Inc
Factory:	Flextronics
Product Name:	OKU Skin Scanning device
Model No.(EUT):	MYS-06
Trade Mark:	OKU
FCC ID:	2ASDKMYS-06
Standards:	FCC 47CFR §2.1093
Date of Receipt:	2019-05-23
Date of Test:	2019-05-31 to 2019-05-31
Date of Issue:	2019-06-05
Test Result:	**PASS ***

* In the configuration tested, the EUT detailed in this report complied with the standards specified above.

Authorized Signature:

Derek Yang

Wireless Laboratory Manager

Unless otherwise agreed in writing, this document is issued by the Company subject to its General Conditions of Service printed overleaf, available on request or accessible at http://www.sgs.com/en/Terms-and-Conditions.aspx and, for electronic format documents, subject to Terms and Conditions for Electronic Documents at http://www.sgs.com/en/Terms-and-Conditions/Terms-e-Document.aspx. Attention is drawn to the limitation of liability, indemnification and jurisdiction issues defined therein. Any holder of this document is advised that information contained hereon reflects the Company's findings at the time of its intervention only and within the limits of Client's instructions, if any. The Company's sole responsibility is to its Client and this document does not exonerate parties to a transaction from exercising all their rights and obligations under the transaction documents. This document cannot be reproduced except in full, without prior written approval of the Company. Any unauthorized alteration, forgery or falsification of the content or appearance of this document is unlawful and offenders may be prosecuted to the fullest extent of the law. Unless otherwise stated the results shown in this test report refer only to the sample(s) tested and such sample(s) are retained for 30 days only.
Attention: To check the authenticity of testing /inspection report & certificate, please contact us at telephone: (86-755) 8307 1443, or email: CN.Doccheck@sgs.com
SGS-CSTC Standards Technical Services Co., Ltd. Shenzhen Branch Testing Center-EEC Laboratory.
No.1 Workshop, M-10, Middle Section, Science & Technology Park, Shenzhen, China 518057 t (86-755) 26012053 f (86-755) 26710594 www.sgsgroup.com.cn
中国·深圳·科技园中区M-10栋一号厂房 邮编: 518057 t (86-755) 26012053 f (86-755) 26710594 sgs.china@sgs.com
Member of the SGS Group (SGS SA)

REVISION HISTORY

Revision Record				
Version	**Chapter**	**Date**	**Modifier**	**Remark**
01		2019-06-05		Original

Unless otherwise agreed in writing, this document is issued by the Company subject to its General Conditions of Service printed overleaf, available on request or accessible at http://www.sgs.com/en/Terms-and-Conditions.aspx and, for electronic format documents, subject to Terms and Conditions for Electronic Documents at http://www.sgs.com/en/Terms-and-Conditions/Terms-e-Document.aspx. Attention is drawn to the limitation of liability, indemnification and jurisdiction issues defined therein. Any holder of this document is advised that information contained hereon reflects the Company's findings at the time of its intervention only and within the limits of Client's instructions, if any. The Company's sole responsibility is to its Client and this document does not exonerate parties to a transaction from exercising all their rights and obligations under the transaction documents. This document cannot be reproduced except in full, without prior written approval of the Company. Any unauthorized alteration, forgery or falsification of the content or appearance of this document is unlawful and offenders may be prosecuted to the fullest extent of the law. Unless otherwise stated the results shown in this test report refer only to the sample(s) tested and such sample(s) are retained for 30 days only.
Attention: To check the authenticity of testing /inspection report & certificate, please contact us at telephone: (86-755) 8307 1443, or email: CN.Doccheck@sgs.com

SGS-CSTC Standards Technical Services Co., Ltd.
Shenzhen Branch Testing Center-EEC Laboratory.
No.1 Workshop, M-10, Middle Section, Science & Technology Park, Shenzhen, China 518057 t (86-755) 26012053 f (86-755) 26710594 www.sgsgroup.com.cn
中国·深圳·科技园中区M-10栋一号厂房 邮编: 518057 t (86-755) 26012053 f (86-755) 26710594 sgs.china@sgs.com

TEST SUMMARY

Frequency Band	Maximum Reported SAR(W/kg)
	Body 0mm
WI-FI (2.4GHz)	1.44
SAR Limited(W/kg)	1.6

Approved & Released by

Simon Ling

Simon Ling

SAR Manager

Tested by

Jackson Li

Jackson Li

SAR Engineer

Unless otherwise agreed in writing, this document is issued by the Company subject to its General Conditions of Service printed overleaf, available on request or accessible at http://www.sgs.com/en/Terms-and-Conditions.aspx and, for electronic format documents, subject to Terms and Conditions for Electronic Documents at http://www.sgs.com/en/Terms-and-Conditions/Terms-e-Document.aspx. Attention is drawn to the limitation of liability, indemnification and jurisdiction issues defined therein. Any holder of this document is advised that information contained hereon reflects the Company's findings at the time of its intervention only and within the limits of Client's instructions, if any. The Company's sole responsibility is to its Client and this document does not exonerate parties to a transaction from exercising all their rights and obligations under the transaction documents. This document cannot be reproduced except in full, without prior written approval of the Company. Any unauthorized alteration, forgery or falsification of the content or appearance of this document is unlawful and offenders may be prosecuted to the fullest extent of the law. Unless otherwise stated the results shown in this test report refer only to the sample(s) tested and such sample(s) are retained for 30 days only.
Attention: To check the authenticity of testing /inspection report & certificate, please contact us at telephone: (86-755) 8307 1443, or email: CN.Doccheck@sgs.com

SGS-CSTC Standards Technical Services Co., Ltd. Shenzhen Branch Testing Center-EEC Laboratory.

No.1 Workshop, M-10, Middle Section, Science & Technology Park, Shenzhen, China 518057 t (86-755) 26012053 f (86-755) 26710594 www.sgsgroup.com.cn
中国·深圳·科技园中区M-10栋一号厂房 邮编: 518057 t (86-755) 26012053 f (86-755) 26710594 sgs.china@sgs.com

Member of the SGS Group (SGS SA)

CONTENTS

1 GENERAL INFORMATION 6
1.1 DETAILS OF CLIENT 6
1.2 TEST LOCATION 6
1.3 TEST FACILITY 7
1.4 GENERAL DESCRIPTION OF EUT 8
1.4.1 DUT Antenna Locations 9
1.5 TEST SPECIFICATION 10
1.6 RF EXPOSURE LIMITS 11
2 LABORATORY ENVIRONMENT 12
3 SAR MEASUREMENTS SYSTEM CONFIGURATION 13
3.1 THE SAR MEASUREMENT SYSTEM 13
3.2 ISOTROPIC E-FIELD PROBE EX3DV4 14
3.3 DATA ACQUISITION ELECTRONICS (DAE) 15
3.4 SAM TWIN PHANTOM 15
3.5 ELI PHANTOM 16
3.6 DEVICE HOLDER FOR TRANSMITTERS 17
3.7 MEASUREMENT PROCEDURE 18
3.7.1 Scanning procedure 18
3.7.2 Data Storage 20
3.7.3 Data Evaluation by SEMCAD 20
4 SAR MEASUREMENT VARIABILITY AND UNCERTAINTY 22
4.1 SAR MEASUREMENT VARIABILITY 22
4.2 SAR MEASUREMENT UNCERTAINTY 23
5 DESCRIPTION OF TEST POSITION 24
5.1 BODY EXPOSURE CONDITION 24
5.1.1 Wireless Router exposure conditions 24
6 SAR SYSTEM VERIFICATION PROCEDURE 25
6.1 TISSUE SIMULATE LIQUID 25
6.1.1 Recipes for Tissue Simulate Liquid 25
6.1.2 Measurement for Tissue Simulate Liquid 26
6.2 SAR SYSTEM CHECK 27
6.2.1 Justification for Extended SAR Dipole Calibrations 28
6.2.2 Summary System Check Result(s) 29
6.2.3 Detailed System Check Results 29
7 TEST CONFIGURATION 30
7.1 OPERATION CONFIGURATIONS 30
7.1.1 WiFi Test Configuration 30
8 TEST RESULT 34
8.1 MEASUREMENT OF RF CONDUCTED POWER 34
8.1.1 Conducted Power of WIFI and BT 34
8.2 STAND-ALONE SAR TEST EVALUATION 35
8.3 MEASUREMENT OF SAR DATA 36

Unless otherwise agreed in writing, this document is issued by the Company subject to its General Conditions of Service printed overleaf, available on request or accessible at http://www.sgs.com/en/Terms-and-Conditions.aspx and, for electronic format documents, subject to Terms and Conditions for Electronic Documents at http://www.sgs.com/en/Terms-and-Conditions/Terms-e-Document.aspx. Attention is drawn to the limitation of liability, indemnification and jurisdiction issues defined therein. Any holder of this document is advised that information contained hereon reflects the Company's findings at the time of its intervention only and within the limits of Client's instructions, if any. The Company's sole responsibility is to its Client and this document does not exonerate parties to a transaction from exercising all their rights and obligations under the transaction documents. This document cannot be reproduced except in full, without prior written approval of the Company. Any unauthorized alteration, forgery or falsification of the content or appearance of this document is unlawful and offenders may be prosecuted to the fullest extent of the law. Unless otherwise stated the results shown in this test report refer only to the sample(s) tested and such sample(s) are retained for 30 days only.
Attention: To check the authenticity of testing /inspection report & certificate, please contact us at telephone: (86-755) 8307 1443, or email: CN.Doccheck@sgs.com
SGS-CSTC Standards Technical Services Co., Ltd. Shenzhen Branch Testing Center-EEC Laboratory.
No.1 Workshop, M-10, Middle Section, Science & Technology Park, Shenzhen, China 518057 t (86-755) 26012053 f (86-755) 26710594 www.sgsgroup.com.cn
中国·深圳·科技园中区M-10栋一号厂房 邮编: 518057 t (86-755) 26012053 f (86-755) 26710594 sgs.china@sgs.com
Member of the SGS Group (SGS SA)

8.3.1 SAR Results of WIFI 2.4G 36

9 EQUIPMENT LIST 37

10 CALIBRATION CERTIFICATE 38

11 PHOTOGRAPHS 38

APPENDIX A: DETAILED SYSTEM CHECK RESULTS 38

APPENDIX B: DETAILED TEST RESULTS 38

APPENDIX C: CALIBRATION CERTIFICATE 38

APPENDIX D: PHOTOGRAPHS 38

Unless otherwise agreed in writing, this document is issued by the Company subject to its General Conditions of Service printed overleaf, available on request or accessible at http://www.sgs.com/en/Terms-and-Conditions.aspx and, for electronic format documents, subject to Terms and Conditions for Electronic Documents at http://www.sgs.com/en/Terms-and-Conditions/Terms-e-Document.aspx. Attention is drawn to the limitation of liability, indemnification and jurisdiction issues defined therein. Any holder of this document is advised that information contained hereon reflects the Company's findings at the time of its intervention only and within the limits of Client's instructions, if any. The Company's sole responsibility is to its Client and this document does not exonerate parties to a transaction from exercising all their rights and obligations under the transaction documents. This document cannot be reproduced except in full, without prior written approval of the Company. Any unauthorized alteration, forgery or falsification of the content or appearance of this document is unlawful and offenders may be prosecuted to the fullest extent of the law. Unless otherwise stated the results shown in this test report refer only to the sample(s) tested and such sample(s) are retained for 30 days only.
Attention: To check the authenticity of testing /inspection report & certificate, please contact us at telephone: (86-755) 8307 1443, or email: CN.Doccheck@sgs.com

SGS-CSTC Standards Technical Services Co., Ltd. Shenzhen Branch Testing Center-EEC Laboratory.

No.1 Workshop, M-10, Middle Section, Science & Technology Park, Shenzhen, China 518057 t (86-755) 26012053 f (86-755) 26710594 www.sgsgroup.com.cn
中国·深圳·科技园中区M-10栋一号厂房 邮编: 518057 t (86-755) 26012053 f (86-755) 26710594 sgs.china@sgs.com

Member of the SGS Group (SGS SA)

1 General Information

1.1 Details of Client

Applicant:	MYSKIN, INC
Address:	123 TOWN SQUARE PLACE, SUITE 325
Manufacturer:	mySkin, Inc
Address:	123 Town Square Place, Suite 324, Jersey City, NJ 07310
Factory:	Flextronics
Address:	Xin Qing Science & Technology Industrial Park Zhuhai, Guangdong China

1.2 Test Location

Company:	SGS-CSTC Standards Technical Services Co., Ltd. Shenzhen Branch E&E Lab
Address:	No. 1 Workshop, M-10, Middle section, Science & Technology Park, Shenzhen, Guangdong, China
Post code:	518057
Telephone:	+86 (0) 755 2601 2053
Fax:	+86 (0) 755 2671 0594
E-mail:	ee.shenzhen@sgs.com

Unless otherwise agreed in writing, this document is issued by the Company subject to its General Conditions of Service printed overleaf, available on request or accessible at http://www.sgs.com/en/Terms-and-Conditions.aspx and, for electronic format documents, subject to Terms and Conditions for Electronic Documents at http://www.sgs.com/en/Terms-and-Conditions/Terms-e-Document.aspx. Attention is drawn to the limitation of liability, indemnification and jurisdiction issues defined therein. Any holder of this document is advised that information contained hereon reflects the Company's findings at the time of its intervention only and within the limits of Client's instructions, if any. The Company's sole responsibility is to its Client and this document does not exonerate parties to a transaction from exercising all their rights and obligations under the transaction documents. This document cannot be reproduced except in full, without prior written approval of the Company. Any unauthorized alteration, forgery or falsification of the content or appearance of this document is unlawful and offenders may be prosecuted to the fullest extent of the law. Unless otherwise stated the results shown in this test report refer only to the sample(s) tested and such sample(s) are retained for 30 days only.
Attention: To check the authenticity of testing /inspection report & certificate, please contact us at telephone: (86-755) 8307 1443, or email: CN.Doccheck@sgs.com
SGS-CSTC Standards Technical Services Co., Ltd. Shenzhen Branch Testing Center-EEC Laboratory.
No.1 Workshop, M-10, Middle Section, Science & Technology Park, Shenzhen, China 518057 t (86-755) 26012053 f (86-755) 26710594 www.sgsgroup.com.cn
中国·深圳·科技园中区M-10栋一号厂房 邮编: 518057 t (86-755) 26012053 f (86-755) 26710594 sgs.china@sgs.com
Member of the SGS Group (SGS SA)

1.3 Test Facility

The test facility is recognized, certified, or accredited by the following organizations:

• CNAS (No. CNAS L2929)

CNAS has accredited SGS-CSTC Standards Technical Services Co., Ltd. Shenzhen Branch EMC Lab to ISO/IEC 17025:2005 General Requirements for the Competence of Testing and Calibration Laboratories (CNAS-CL01 Accreditation Criteria for the Competence of Testing and Calibration Laboratories) for the competence in the field of testing.

• A2LA (Certificate No. 3816.01)

SGS-CSTC Standards Technical Services Co., Ltd., Shenzhen EMC Laboratory is accredited by the American Association for Laboratory Accreditation (A2LA). Certificate No. 3816.01.

• VCCI

The 10m Semi-anechoic chamber and Shielded Room of SGS-CSTC Standards Technical Services Co., Ltd. have been registered in accordance with the Regulations for Voluntary Control Measures with Registration No.: G-823, R-4188, T-1153 and C-2383 respectively.

• FCC –Designation Number: CN1178

SGS-CSTC Standards Technical Services Co., Ltd., Shenzhen EMC Laboratory has been recognized as an accredited testing laboratory.

Designation Number: CN1178. Test Firm Registration Number: 406779.

• Industry Canada (IC)

Two 3m Semi-anechoic chambers and the 10m Semi-anechoic chamber of SGS-CSTC Standards Technical Services Co., Ltd. Shenzhen Branch EMC Lab have been registered by Certification and Engineering Bureau of Industry Canada for radio equipment testing with Registration No.: 4620C-1, 4620C-2, 4620C-3.

Unless otherwise agreed in writing, this document is issued by the Company subject to its General Conditions of Service printed overleaf, available on request or accessible at http://www.sgs.com/en/Terms-and-Conditions.aspx and, for electronic format documents, subject to Terms and Conditions for Electronic Documents at http://www.sgs.com/en/Terms-and-Conditions/Terms-e-Document.aspx. Attention is drawn to the limitation of liability, indemnification and jurisdiction issues defined therein. Any holder of this document is advised that information contained hereon reflects the Company's findings at the time of its intervention only and within the limits of Client's instructions, if any. The Company's sole responsibility is to its Client and this document does not exonerate parties to a transaction from exercising all their rights and obligations under the transaction documents. This document cannot be reproduced except in full, without prior written approval of the Company. Any unauthorized alteration, forgery or falsification of the content or appearance of this document is unlawful and offenders may be prosecuted to the fullest extent of the law. Unless otherwise stated the results shown in this test report refer only to the sample(s) tested and such sample(s) are retained for 30 days only.
Attention: To check the authenticity of testing /inspection report & certificate, please contact us at telephone: (86-755) 8307 1443, or email: CN.Doccheck@sgs.com
SGS-CSTC Standards Technical Services Co., Ltd. Shenzhen Branch Testing Center EMC Laboratory
No.1 Workshop, M-10, Middle Section, Science & Technology Park, Shenzhen, China 518057 t (86-755) 26012053 f (86-755) 26710594 www.sgsgroup.com.cn
中国·深圳·科技园中区M-10栋一号厂房 邮编: 518057 t (86-755) 26012053 f (86-755) 26710594 sgs.china@sgs.com
Member of the SGS Group (SGS SA)

1.4 General Description of EUT

Product Name:	OKU Skin Scanning device		
Model No.(EUT):	MYS-06		
Product Phase:	production unit		
Device Type:	portable device		
Exposure Category:	uncontrolled environment / general population		
FCC ID:	2ASDKMYS-06		
SN:	SG1903270358		
Hardware Version:	X1_4		
Software Version:	0x8023		
Antenna Type:	Inner Antenna		
Device Operating Configurations:			
Modulation Mode:	**WIFI**: DSSS,OFDM; **BT**: GFSK		
Frequency Bands:	Band	Tx (MHz)	Rx (MHz)
	WIFI(2.4GHz)	2412~2462	2412~2462
	BT	2402~2480	2402~2480
Battery Information:	Model:	JHY561528	
	Rated Capacity:	200mAh	
	Manufacturer:	Shenzhen JUHEYUAN SCIENCE&TECHNOLOGY CO.,LTD.	

Unless otherwise agreed in writing, this document is issued by the Company subject to its General Conditions of Service printed overleaf, available on request or accessible at http://www.sgs.com/en/Terms-and-Conditions.aspx and, for electronic format documents, subject to Terms and Conditions for Electronic Documents at http://www.sgs.com/en/Terms-and-Conditions/Terms-e-Document.aspx. Attention is drawn to the limitation of liability, indemnification and jurisdiction issues defined therein. Any holder of this document is advised that information contained hereon reflects the Company's findings at the time of its intervention only and within the limits of Client's instructions, if any. The Company's sole responsibility is to its Client and this document does not exonerate parties to a transaction from exercising all their rights and obligations under the transaction documents. This document cannot be reproduced except in full, without prior written approval of the Company. Any unauthorized alteration, forgery or falsification of the content or appearance of this document is unlawful and offenders may be prosecuted to the fullest extent of the law. Unless otherwise stated the results shown in this test report refer only to the sample(s) tested and such sample(s) are retained for 30 days only.
Attention: To check the authenticity of testing /inspection report & certificate, please contact us at telephone: (86-755) 8307 1443, or email: CN.Doccheck@sgs.com
SGS-CSTC Standards Technical Services Co.,Ltd. Shenzhen Branch Testing Center-EEC Laboratory.
No.1 Workshop, M-10, Middle Section, Science & Technology Park, Shenzhen, China 518057 t (86-755) 26012053 f (86-755) 26710594 www.sgsgroup.com.cn
中国·深圳·科技园中区M-10栋一号厂房 邮编: 518057 t (86-755) 26012053 f (86-755) 26710594 sgs.china@sgs.com
Member of the SGS Group (SGS SA)

1.4.1 DUT Antenna Locations

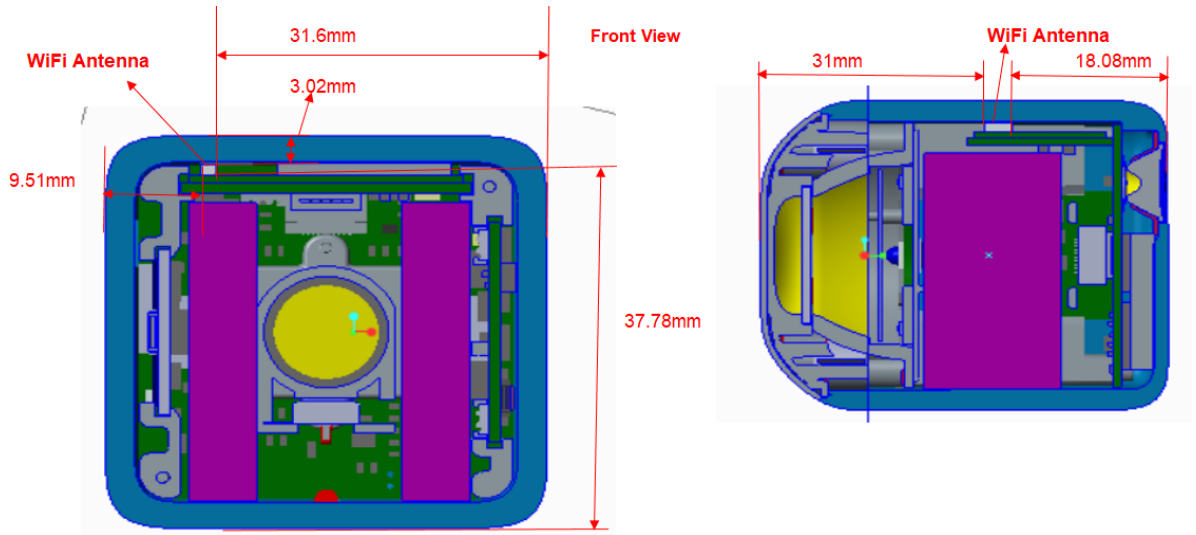

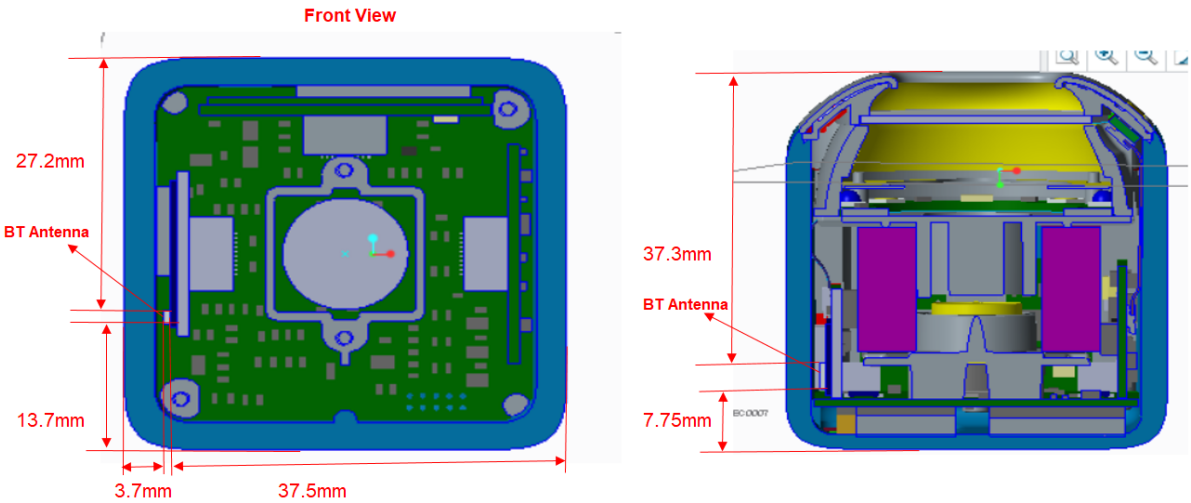

Note: Wi-Fi 2.4G can't transmit simultaneously with Bluetooth.

EUT Sides for SAR Testing						
Mode	Front	Back	Left	Right	Top	Bottom
Wi-Fi (2.4GHz)	Yes	Yes	Yes	Yes	Yes	Yes

Table 1： EUT Sides for SAR Testing

Unless otherwise agreed in writing, this document is issued by the Company subject to its General Conditions of Service printed overleaf, available on request or accessible at http://www.sgs.com/en/Terms-and-Conditions.aspx and, for electronic format documents, subject to Terms and Conditions for Electronic Documents at http://www.sgs.com/en/Terms-and-Conditions/Terms-e-Document.aspx. Attention is drawn to the limitation of liability, indemnification and jurisdiction issues defined therein. Any holder of this document is advised that information contained hereon reflects the Company's findings at the time of its intervention only and within the limits of Client's instructions, if any. The Company's sole responsibility is to its Client and this document does not exonerate parties to a transaction from exercising all their rights and obligations under the transaction documents. This document cannot be reproduced except in full, without prior written approval of the Company. Any unauthorized alteration, forgery or falsification of the content or appearance of this document is unlawful and offenders may be prosecuted to the fullest extent of the law. Unless otherwise stated the results shown in this test report refer only to the sample(s) tested and such sample(s) are retained for 30 days only.
Attention: To check the authenticity of testing /inspection report & certificate, please contact us at telephone: (86-755) 8307 1443, or email: CN.Doccheck@sgs.com
SGS-CSTC Standards Technical Services Co., Ltd. Shenzhen Branch Testing Center-EEC Laboratory.
No.1 Workshop, M-10, Middle Section, Science & Technology Park, Shenzhen, China 518057 t (86-755) 26012053 f (86-755) 26710594 www.sgsgroup.com.cn
中国·深圳·科技园中区M-10栋一号厂房 邮编: 518057 t (86-755) 26012053 f (86-755) 26710594 sgs.china@sgs.com
Member of the SGS Group (SGS SA)

1.5 Test Specification

Identity	Document Title
FCC 47CFR §2.1093	Radiofrequency Radiation Exposure Evaluation: Portable Devices
IEEE Std C95.1 – 1991	IEEE Standard for Safety Levels with Respect to Human Exposure to Radio Frequency Electromagnetic Fields, 3 kHz – 300 GHz.
IEEE 1528-2013	Recommended Practice for Determining the Peak Spatial-Average Specific Absorption Rate (SAR) in the Human Head from Wireless Communications Devices: Measurement Techniques
KDB 248227 D01	SAR Guidance for IEEE 802 11 Wi-Fi SAR v02r02
KDB447498 D01	General RF Exposure Guidance v06
KDB 865664 D01	SAR Measurement 100 MHz to 6 GHz v01r04
KDB 865664 D02	RF Exposure Reporting v01r02
KDB 690783 D01	SAR Listings on Grants v01r03

Unless otherwise agreed in writing, this document is issued by the Company subject to its General Conditions of Service printed overleaf, available on request or accessible at http://www.sgs.com/en/Terms-and-Conditions.aspx and, for electronic format documents, subject to Terms and Conditions for Electronic Documents at http://www.sgs.com/en/Terms-and-Conditions/Terms-e-Document.aspx. Attention is drawn to the limitation of liability, indemnification and jurisdiction issues defined therein. Any holder of this document is advised that information contained hereon reflects the Company's findings at the time of its intervention only and within the limits of Client's instructions, if any. The Company's sole responsibility is to its Client and this document does not exonerate parties to a transaction from exercising all their rights and obligations under the transaction documents. This document cannot be reproduced except in full, without prior written approval of the Company. Any unauthorized alteration, forgery or falsification of the content or appearance of this document is unlawful and offenders may be prosecuted to the fullest extent of the law. Unless otherwise stated the results shown in this test report refer only to the sample(s) tested and such sample(s) are retained for 30 days only.
Attention: To check the authenticity of testing /inspection report & certificate, please contact us at telephone: (86-755) 8307 1443, or email: CN.Doccheck@sgs.com
SGS-CSTC Standards Technical Services Co., Ltd. Shenzhen Branch Testing Center-EEC Laboratory.
No.1 Workshop, M-10, Middle Section, Science & Technology Park, Shenzhen, China 518057 t (86-755) 26012053 f (86-755) 26710594 www.sgsgroup.com.cn
中国·深圳·科技园中区M-10栋一号厂房 邮编: 518057 t (86-755) 26012053 f (86-755) 26710594 sgs.china@sgs.com
Member of the SGS Group (SGS SA)

1.6 RF exposure limits

Human Exposure	Uncontrolled Environment General Population	Controlled Environment Occupational
Spatial Peak SAR* (Brain*Trunk)	**1.60 mW/g**	8.00 mW/g
Spatial Average SAR** (Whole Body)	0.08 mW/g	0.40 mW/g
Spatial Peak SAR*** (Hands/Feet/Ankle/Wrist)	4.00 mW/g	20.00 mW/g

Notes:

* The Spatial Peak value of the SAR averaged over any 1 gram of tissue (defined as a tissue volume in the shape of a cube) and over the appropriate averaging time

** The Spatial Average value of the SAR averaged over the whole body.

*** The Spatial Peak value of the SAR averaged over any 10 grams of tissue (defined as a tissue volume in the shape of a cube) and over the appropriate averaging time.

Uncontrolled Environments are defined as locations where there is the exposure of individuals who have no knowledge or control of their exposure.

Controlled Environments are defined as locations where there is exposure that may be incurred by persons who are aware of the potential for exposure, (i.e. as a result of employment or occupation.)

Unless otherwise agreed in writing, this document is issued by the Company subject to its General Conditions of Service printed overleaf, available on request or accessible at http://www.sgs.com/en/Terms-and-Conditions.aspx and, for electronic format documents, subject to Terms and Conditions for Electronic Documents at http://www.sgs.com/en/Terms-and-Conditions/Terms-e-Document.aspx. Attention is drawn to the limitation of liability, indemnification and jurisdiction issues defined therein. Any holder of this document is advised that information contained hereon reflects the Company's findings at the time of its intervention only and within the limits of Client's instructions, if any. The Company's sole responsibility is to its Client and this document does not exonerate parties to a transaction from exercising all their rights and obligations under the transaction documents. This document cannot be reproduced except in full, without prior written approval of the Company. Any unauthorized alteration, forgery or falsification of the content or appearance of this document is unlawful and offenders may be prosecuted to the fullest extent of the law. Unless otherwise stated the results shown in this test report refer only to the sample(s) tested and such sample(s) are retained for 30 days only.
Attention: To check the authenticity of testing /inspection report & certificate, please contact us at telephone: (86-755) 8307 1443, or email: CN.Doccheck@sgs.com
SGS-CSTC Standards Technical Services Co., Ltd. Shenzhen Branch Testing Center-EEC Laboratory.
No.1 Workshop, M-10, Middle Section, Science & Technology Park, Shenzhen, China 518057 t (86-755) 26012053 f (86-755) 26710594 www.sgsgroup.com.cn
中国·深圳·科技园中区M-10栋一号厂房 邮编: 518057 t (86-755) 26012053 f (86-755) 26710594 sgs.china@sgs.com
Member of the SGS Group (SGS SA)

2 Laboratory Environment

Temperature	Min. = 18°C, Max. = 25 °C
Relative humidity	Min. = 30%, Max. = 70%
Ground system resistance	< 0.5 Ω
Ambient noise is checked and found very low and in compliance with requirement of standards. Reflection of surrounding objects is minimized and in compliance with requirement of standards.	

Table 2： The Ambient Conditions

Unless otherwise agreed in writing, this document is issued by the Company subject to its General Conditions of Service printed overleaf, available on request or accessible at http://www.sgs.com/en/Terms-and-Conditions.aspx and, for electronic format documents, subject to Terms and Conditions for Electronic Documents at http://www.sgs.com/en/Terms-and-Conditions/Terms-e-Document.aspx. Attention is drawn to the limitation of liability, indemnification and jurisdiction issues defined therein. Any holder of this document is advised that information contained hereon reflects the Company's findings at the time of its intervention only and within the limits of Client's instructions, if any. The Company's sole responsibility is to its Client and this document does not exonerate parties to a transaction from exercising all their rights and obligations under the transaction documents. This document cannot be reproduced except in full, without prior written approval of the Company. Any unauthorized alteration, forgery or falsification of the content or appearance of this document is unlawful and offenders may be prosecuted to the fullest extent of the law. Unless otherwise stated the results shown in this test report refer only to the sample(s) tested and such sample(s) are retained for 30 days only.
Attention: To check the authenticity of testing /inspection report & certificate, please contact us at telephone: (86-755) 8307 1443, or email: CN.Doccheck@sgs.com
SGS-CSTC Standards Technical Services Co.,Ltd. Shenzhen Branch Testing Center-EEC Laboratory.
No.1 Workshop, M-10, Middle Section, Science & Technology Park, Shenzhen, China 518057 t (86-755) 26012053 f (86-755) 26710594 www.sgsgroup.com.cn
中国·深圳·科技园中区M-10栋一号厂房 邮编: 518057 t (86-755) 26012053 f (86-755) 26710594 sgs.china@sgs.com
Member of the SGS Group (SGS SA)

3 SAR Measurements System Configuration

3.1 The SAR Measurement System

This SAR Measurement System uses a Computer-controlled 3-D stepper motor system (SPEAG DASY5 professional system). A E-field probe is used to determine the internal electric fields. The SAR can be obtained from the equation SAR= σ (|Ei|2)/ ρ where σ and ρ are the conductivity and mass density of the tissue-Simulate.

The DASY5 system for performing compliance tests consists of the following items:
A standard high precision 6-axis robot (Stabile RX family) with controller, teach pendant and software .An arm extension for accommodation the data acquisition electronics (DAE).

A dosimetric probe, i.e., an isotropic E-field probe optimized and calibrated for usage in tissue simulating liquid. The probe is equipped with an optical surface detector system.

A data acquisition electronics (DAE) which performs the signal amplification, signal multiplexing, AD-conversion, offset measurements, mechanical surface detection, collision detection, etc. The unit is battery powered with standard or rechargeable batteries. The signal is optically transmitted to the EOC.

The Electro-optical converter (EOC) performs the conversion between optical and electrical of the signals for the digital communication to DAE and for the analog signal from the optical surface detection. The EOC is connected to the measurement server.

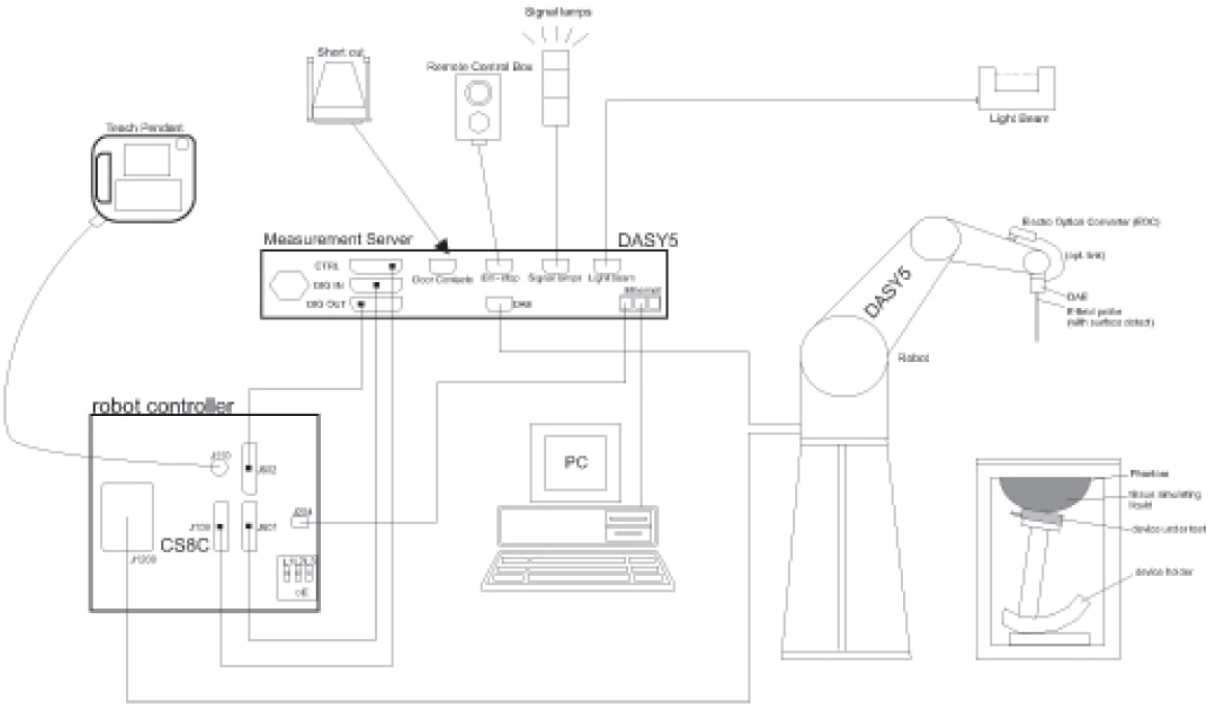

F-1. SAR Measurement System Configuration

Unless otherwise agreed in writing, this document is issued by the Company subject to its General Conditions of Service printed overleaf, available on request or accessible at http://www.sgs.com/en/Terms-and-Conditions.aspx and, for electronic format documents, subject to Terms and Conditions for Electronic Documents at http://www.sgs.com/en/Terms-and-Conditions/Terms-e-Document.aspx. Attention is drawn to the limitation of liability, indemnification and jurisdiction issues defined therein. Any holder of this document is advised that information contained hereon reflects the Company's findings at the time of its intervention only and within the limits of Client's instructions, if any. The Company's sole responsibility is to its Client and this document does not exonerate parties to a transaction from exercising all their rights and obligations under the transaction documents. This document cannot be reproduced except in full, without prior written approval of the Company. Any unauthorized alteration, forgery or falsification of the content or appearance of this document is unlawful and offenders may be prosecuted to the fullest extent of the law. Unless otherwise stated the results shown in this test report refer only to the sample(s) tested and such sample(s) are retained for 30 days only.
Attention: To check the authenticity of testing /inspection report & certificate, please contact us at telephone: (86-755) 8307 1443, or email: CN.Doccheck@sgs.com
No.1 Workshop, M-10, Middle Section, Science & Technology Park, Shenzhen, China 518057 t (86–755) 26012053 f (86–755) 26710594 www.sgsgroup.com.cn
中国·深圳·科技园中区M–10栋一号厂房 邮编: 518057 t (86–755) 26012053 f (86–755) 26710594 sgs.china@sgs.com
Member of the SGS Group (SGS SA)

- The function of the measurement server is to perform the time critical tasks such as signal filtering, control of the robot operation and fast movement interrupts.
- A probe alignment unit which improves the (absolute) accuracy of the probe positioning.
- A computer operating Windows 7.
- DASY5 software.
- Remote control with teach pendant and additional circuitry for robot safety such as warning lamps, etc.
- The SAM twin phantom enabling testing left-hand, right-hand and Body Worn usage.
- The device holder for handheld mobile phones.
- Tissue simulating liquid mixed according to the given recipes.
- Validation dipole kits allowing to validating the proper functioning of the system.

3.2 Isotropic E-field Probe EX3DV4

	Symmetrical design with triangular core Built-in shielding against static charges PEEK enclosure material (resistant to organic solvents, e.g., DGBE)
Calibration	ISO/IEC 17025 calibration service available.
Frequency	10 MHz to > 6 GHz Linearity: ± 0.2 dB (30 MHz to 6 GHz)
Directivity	± 0.3 dB in TSL (rotation around probe axis) ± 0.5 dB in TSL (rotation normal to probe axis)
Dynamic Range	10 µW/g to > 100 mW/g Linearity: ± 0.2 dB (noise: typically < 1 µW/g)
Dimensions	Overall length: 337 mm (Tip: 20 mm) Tip diameter: 2.5 mm (Body: 12 mm) Typical distance from probe tip to dipole centers: 1 mm
Application	High precision dosimetric measurements in any exposure scenario (e.g., very strong gradient fields); the only probe that enables compliance testing for frequencies up to 6 GHz with precision of better 30%.
Compatibility	DASY3, DASY4, DASY52 SAR and higher, EASY4/MRI

Unless otherwise agreed in writing, this document is issued by the Company subject to its General Conditions of Service printed overleaf, available on request or accessible at http://www.sgs.com/en/Terms-and-Conditions.aspx and, for electronic format documents, subject to Terms and Conditions for Electronic Documents at http://www.sgs.com/en/Terms-and-Conditions/Terms-e-Document.aspx. Attention is drawn to the limitation of liability, indemnification and jurisdiction issues defined therein. Any holder of this document is advised that information contained hereon reflects the Company's findings at the time of its intervention only and within the limits of Client's instructions, if any. The Company's sole responsibility is to its Client and this document does not exonerate parties to a transaction from exercising all their rights and obligations under the transaction documents. This document cannot be reproduced except in full, without prior written approval of the Company. Any unauthorized alteration, forgery or falsification of the content or appearance of this document is unlawful and offenders may be prosecuted to the fullest extent of the law. Unless otherwise stated the results shown in this test report refer only to the sample(s) tested and such sample(s) are retained for 30 days only.
Attention: To check the authenticity of testing /inspection report & certificate, please contact us at telephone: (86-755) 8307 1443, or email: CN.Doccheck@sgs.com
SGS-CSTC Standards Technical Services Co., Ltd. Shenzhen Branch Testing Center-EEC Laboratory
No.1 Workshop, M-10, Middle Section, Science & Technology Park, Shenzhen, China 518057 t (86-755) 26012053 f (86-755) 26710594 www.sgsgroup.com.cn
中国·深圳·科技园中区M-10栋一号厂房 邮编: 518057 t (86-755) 26012053 f (86-755) 26710594 sgs.china@sgs.com
Member of the SGS Group (SGS SA)

3.3 Data Acquisition Electronics (DAE)

Model	DAE	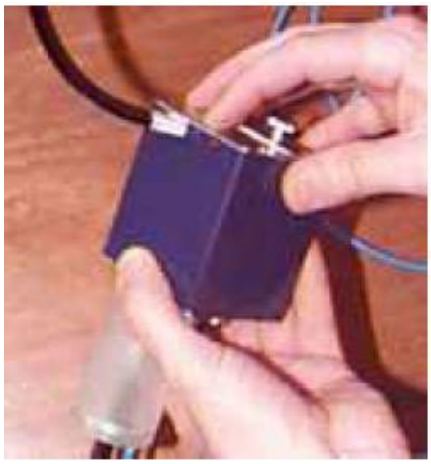
Construction	Signal amplifier, multiplexer, A/D converter and control logic. Serial optical link for communication with DASY4/5 embedded system (fully remote controlled). Two step probe touch detector for mechanical surface detection and emergency robot stop.	
Measurement Range	-100 to +300 mV (16 bit resolution and two range settings: 4mV,400mV)	
Input Offset Voltage	< 5µV (with auto zero)	
Input Bias Current	< 50 f A	
Dimensions	60 x 60 x 68 mm	

3.4 SAM Twin Phantom

Material	Vinylester, glass fiber reinforced (VE-GF)	
Liquid Compatibility	Compatible with all SPEAG tissue simulating liquids (incl. DGBE type)	
Shell Thickness	2 ± 0.2 mm (6 ± 0.2 mm at ear point)	
Dimensions (incl. Wooden Support)	Length: 1000 mm Width: 500 mm Height: adjustable feet	
Filling Volume	approx. 25 liters	
Wooden Support	SPEAG standard phantom table	

The shell corresponds to the specifications of the Specific Anthropomorphic Mannequin (SAM) phantom defined in IEEE 1528 and IEC 62209-1. It enables the dosimetric evaluation of left and right hand phone usage as well as body mounted usage at the flat phantom region. A cover prevents evaporation of the liquid. Reference markings on the phantom allow the complete setup of all predefined phantom positions and measurement grids by teaching three points with the robot.

Twin SAM V5.0 has the same shell geometry and is manufactured from the same material as Twin SAM V4.0, but has reinforced top structure.

Unless otherwise agreed in writing, this document is issued by the Company subject to its General Conditions of Service printed overleaf, available on request or accessible at http://www.sgs.com/en/Terms-and-Conditions.aspx and, for electronic format documents, subject to Terms and Conditions for Electronic Documents at http://www.sgs.com/en/Terms-and-Conditions/Terms-e-Document.aspx. Attention is drawn to the limitation of liability, indemnification and jurisdiction issues defined therein. Any holder of this document is advised that information contained hereon reflects the Company's findings at the time of its intervention only and within the limits of Client's instructions, if any. The Company's sole responsibility is to its Client and this document does not exonerate parties to a transaction from exercising all their rights and obligations under the transaction documents. This document cannot be reproduced except in full, without prior written approval of the Company. Any unauthorized alteration, forgery or falsification of the content or appearance of this document is unlawful and offenders may be prosecuted to the fullest extent of the law. Unless otherwise stated the results shown in this test report refer only to the sample(s) tested and such sample(s) are retained for 30 days only.
Attention: To check the authenticity of testing /inspection report & certificate, please contact us at telephone: (86-755) 8307 1443, or email: CN.Doccheck@sgs.com
SGS-CSTC Standards Technical Services Co., Ltd. Shenzhen Branch Testing Center-EEC Laboratory
No.1 Workshop, M-10, Middle Section, Science & Technology Park, Shenzhen, China 518057 t (86-755) 26012053 f (86-755) 26710594 www.sgsgroup.com.cn
中国·深圳·科技园中区M-10栋一号厂房 邮编: 518057 t (86-755) 26012053 f (86-755) 26710594 sgs.china@sgs.com
Member of the SGS Group (SGS SA)

3.5 ELI Phantom

Material	Vinylester, glass fiber reinforced (VE-GF)	
Liquid Compatibility	Compatible with all SPEAG tissue simulating liquids (incl. DGBE type)	
Shell Thickness	2.0 ± 0.2 mm (bottom plate)	
Dimensions	Major axis: 600 mm Minor axis: 400 mm	
Filling Volume	approx. 30 liters	
Wooden Support	SPEAG standard phantom table	

Phantom for compliance testing of handheld and body-mounted wireless devices in the frequency range of 30 MHz to 6 GHz. ELI is fully compatible with the IEC 62209-2 standard and all known tissue simulating liquids. ELI has been optimized regarding its performance and can be integrated into our standard phantom tables. A cover prevents evaporation of the liquid. Reference markings on the phantom allow installation of the complete setup, including all predefined phantom positions and measurement grids, by teaching three points. The phantom is compatible with all SPEAG dosimetric probes and dipoles.

ELI V5.0 has the same shell geometry and is manufactured from the same material as ELI4, but has reinforced top structure.

Unless otherwise agreed in writing, this document is issued by the Company subject to its General Conditions of Service printed overleaf, available on request or accessible at http://www.sgs.com/en/Terms-and-Conditions.aspx and, for electronic format documents, subject to Terms and Conditions for Electronic Documents at http://www.sgs.com/en/Terms-and-Conditions/Terms-e-Document.aspx. Attention is drawn to the limitation of liability, indemnification and jurisdiction issues defined therein. Any holder of this document is advised that information contained hereon reflects the Company's findings at the time of its intervention only and within the limits of Client's instructions, if any. The Company's sole responsibility is to its Client and this document does not exonerate parties to a transaction from exercising all their rights and obligations under the transaction documents. This document cannot be reproduced except in full, without prior written approval of the Company. Any unauthorized alteration, forgery or falsification of the content or appearance of this document is unlawful and offenders may be prosecuted to the fullest extent of the law. Unless otherwise stated the results shown in this test report refer only to the sample(s) tested and such sample(s) are retained for 30 days only.
Attention: To check the authenticity of testing /inspection report & certificate, please contact us at telephone: (86-755) 8307 1443, or email: CN.Doccheck@sgs.com
SGS-CSTC Standards Technical Services Co.,Ltd. Shenzhen Branch Testing Center-EEC Laboratory.
No.1 Workshop, M-10, Middle Section, Science & Technology Park, Shenzhen, China 518057 t (86-755) 26012053 f (86-755) 26710594 www.sgsgroup.com.cn
中国·深圳·科技园中区M-10栋一号厂房 邮编: 518057 t (86-755) 26012053 f (86-755) 26710594 sgs.china@sgs.com
Member of the SGS Group (SGS SA)

3.6 Device Holder for Transmitters

F-2. **Device Holder for Transmitters**

- The DASY device holder is designed to cope with different positions given in the standard. It has two scales for the device rotation (with respect to the body axis) and the device inclination (with respect to the line between the ear reference points). The rotation centres for both scales are the ear reference point (ERP). Thus the device needs no repositioning when changing the angles.
- The DASY device holder has been made out of low-loss POM material having the following dielectric parameters: relative permittivity ε=3 and loss tangent δ=0.02. The amount of dielectric material has been reduced in the closest vicinity of the device, since measurements have suggested that the influence of the clamp on the test results could thus be lowered.

Unless otherwise agreed in writing, this document is issued by the Company subject to its General Conditions of Service printed overleaf, available on request or accessible at http://www.sgs.com/en/Terms-and-Conditions.aspx and, for electronic format documents, subject to Terms and Conditions for Electronic Documents at http://www.sgs.com/en/Terms-and-Conditions/Terms-e-Document.aspx. Attention is drawn to the limitation of liability, indemnification and jurisdiction issues defined therein. Any holder of this document is advised that information contained hereon reflects the Company's findings at the time of its intervention only and within the limits of Client's instructions, if any. The Company's sole responsibility is to its Client and this document does not exonerate parties to a transaction from exercising all their rights and obligations under the transaction documents. This document cannot be reproduced except in full, without prior written approval of the Company. Any unauthorized alteration, forgery or falsification of the content or appearance of this document is unlawful and offenders may be prosecuted to the fullest extent of the law. Unless otherwise stated the results shown in this test report refer only to the sample(s) tested and such sample(s) are retained for 30 days only.
Attention: To check the authenticity of testing /inspection report & certificate, please contact us at telephone: (86-755) 8307 1443, or email: CN.Doccheck@sgs.com
SGS-CSTC Standards Technical Services Co., Ltd. Shenzhen Branch Testing Center-EEC Laboratory.
No.1 Workshop, M-10, Middle Section, Science & Technology Park, Shenzhen, China 518057 t (86-755) 26012053 f (86-755) 26710594 www.sgsgroup.com.cn
中国·深圳·科技园中区M-10栋一号厂房 邮编: 518057 t (86-755) 26012053 f (86-755) 26710594 sgs.china@sgs.com
Member of the SGS Group (SGS SA)

3.7 Measurement procedure

3.7.1 Scanning procedure

Step 1: Power reference measurement

The “reference” and “drift” measurements are located at the beginning and end of the batch process. They measure the field drift at one single point in the liquid over the complete procedure.

Step 2: *Area scan*

The SAR distribution at the exposed side of the head was measured at a distance of 4mm from the inner surface of the shell. The area covered the entire dimension of the head and the horizontal grid spacing was 15mm*15mm or 12mm*12mm or 10mm*10mm.Based on the area scan data, the area of the maximum absorption was determined by spline interpolation.

Step 3: *Zoom scan*

Around this point, a volume of 32mm*32mm*30mm (f≤2GHz), 30mm*30mm*30mm (f for 2-3GHz) and 24mm*24mm*22mm (f for 5-6GHz) was assessed by measuring 5x5x7 points (f≤2GHz), 7x7x7 points (f for 2-3GHz) and 7x7x12 points (f for 5-6GHz). On this basis of this data set, the spatial peak SAR value was evaluated with the following procedure:

The data at the surface was extrapolated, since the centre of the dipoles is 2.0mm away from the tip of the probe and the distance between the surface and the lowest measuring point is 1.2mm. (This can be variable. Refer to the probe specification).The extrapolation was based on a least square algorithm. A polynomial of the fourth order was calculated through the points in z-axes. This polynomial was then used to evaluate the points between the surface and the probe tip. The maximum interpolated value was searched with a straight-forward algorithm. Around this maximum the SAR values averaged over the spatial volumes (1g or 10g) were computed using the 3D-Spline interpolation algorithm. The volume was integrated with the trapezoidal algorithm. One thousand points were interpolated to calculate the average. All neighbouring volumes were evaluated until no neighboring volume with a higher average value was found.

The area and zoom scan resolutions specified in the table below must be applied to the SAR measurements Probe boundary effect error compensation is required for measurements with the probe tip closer than half a probe tip diameter to the phantom surface. Both the probe tip diameter and sensor offset distance must satisfy measurement protocols; to ensure probe boundary effect errors are minimized and the higher fields closest to the phantom surface can be correctly measured and extrapolated to the phantom surface for computing 1-g SAR. Tolerances of the post-processing algorithms must be verified by the test laboratory for the scan resolutions used in the SAR measurements, according to the reference distribution functions specified in IEEE Std. 1528-2013.

Unless otherwise agreed in writing, this document is issued by the Company subject to its General Conditions of Service printed overleaf, available on request or accessible at http://www.sgs.com/en/Terms-and-Conditions.aspx and, for electronic format documents, subject to Terms and Conditions for Electronic Documents at http://www.sgs.com/en/Terms-and-Conditions/Terms-e-Document.aspx. Attention is drawn to the limitation of liability, indemnification and jurisdiction issues defined therein. Any holder of this document is advised that information contained hereon reflects the Company's findings at the time of its intervention only and within the limits of Client's instructions, if any. The Company's sole responsibility is to its Client and this document does not exonerate parties to a transaction from exercising all their rights and obligations under the transaction documents. This document cannot be reproduced except in full, without prior written approval of the Company. Any unauthorized alteration, forgery or falsification of the content or appearance of this document is unlawful and offenders may be prosecuted to the fullest extent of the law. Unless otherwise stated the results shown in this test report refer only to the sample(s) tested and such sample(s) are retained for 30 days only.
Attention: To check the authenticity of testing /inspection report & certificate, please contact us at telephone: (86-755) 8307 1443, or email: CN.Doccheck@sgs.com
SGS-CSTC Standards Technical Services Co., Ltd. Shenzhen Branch Testing Center-EEC Laboratory.
No.1 Workshop, M-10, Middle Section, Science & Technology Park, Shenzhen, China 518057 t (86-755) 26012053 f (86-755) 26710594 www.sgsgroup.com.cn
中国·深圳·科技园中区M-10栋一号厂房 邮编: 518057 t (86-755) 26012053 f (86-755) 26710594 sgs.china@sgs.com
Member of the SGS Group (SGS SA)

			≤ 3 GHz	> 3 GHz
Maximum distance from closest measurement point (geometric center of probe sensors) to phantom surface			5 ± 1 mm	½·δ·ln(2) ± 0.5 mm
Maximum probe angle from probe axis to phantom surface normal at the measurement location			30° ± 1°	20° ± 1°
Maximum area scan spatial resolution: Δx_{Area}, Δy_{Area}			≤ 2 GHz: ≤ 15 mm 2 – 3 GHz: ≤ 12 mm	3 – 4 GHz: ≤ 12 mm 4 – 6 GHz: ≤ 10 mm
			When the x or y dimension of the test device, in the measurement plane orientation, is smaller than the above, the measurement resolution must be ≤ the corresponding x or y dimension of the test device with at least one measurement point on the test device.	
Maximum zoom scan spatial resolution: Δx_{Zoom}, Δy_{Zoom}			≤ 2 GHz: ≤ 8 mm 2 – 3 GHz: ≤ 5 mm*	3 – 4 GHz: ≤ 5 mm* 4 – 6 GHz: ≤ 4 mm*
Maximum zoom scan spatial resolution, normal to phantom surface	uniform grid: $\Delta z_{Zoom}(n)$		≤ 5 mm	3 – 4 GHz: ≤ 4 mm 4 – 5 GHz: ≤ 3 mm 5 – 6 GHz: ≤ 2 mm
	graded grid	$\Delta z_{Zoom}(1)$: between 1st two points closest to phantom surface	≤ 4 mm	3 – 4 GHz: ≤ 3 mm 4 – 5 GHz: ≤ 2.5 mm 5 – 6 GHz: ≤ 2 mm
		$\Delta z_{Zoom}(n>1)$: between subsequent points	≤ 1.5·$\Delta z_{Zoom}(n-1)$	
Minimum zoom scan volume	x, y, z		≥ 30 mm	3 – 4 GHz: ≥ 28 mm 4 – 5 GHz: ≥ 25 mm 5 – 6 GHz: ≥ 22 mm

Step 4: Power reference measurement (drift)

The Power Drift Measurement job measures the field at the same location as the most recent power reference measurement job within the same procedure, and with the same settings. The indicated drift is mainly the variation of the DUT's output power and should vary max. ± 5 %

Unless otherwise agreed in writing, this document is issued by the Company subject to its General Conditions of Service printed overleaf, available on request or accessible at http://www.sgs.com/en/Terms-and-Conditions.aspx and, for electronic format documents, subject to Terms and Conditions for Electronic Documents at http://www.sgs.com/en/Terms-and-Conditions/Terms-e-Document.aspx. Attention is drawn to the limitation of liability, indemnification and jurisdiction issues defined therein. Any holder of this document is advised that information contained hereon reflects the Company's findings at the time of its intervention only and within the limits of Client's instructions, if any. The Company's sole responsibility is to its Client and this document does not exonerate parties to a transaction from exercising all their rights and obligations under the transaction documents. This document cannot be reproduced except in full, without prior written approval of the Company. Any unauthorized alteration, forgery or falsification of the content or appearance of this document is unlawful and offenders may be prosecuted to the fullest extent of the law. Unless otherwise stated the results shown in this test report refer only to the sample(s) tested and such sample(s) are retained for 30 days only.
Attention: To check the authenticity of testing /inspection report & certificate, please contact us at telephone: (86-755) 8307 1443, or email: CN.Doccheck@sgs.com
SGS-CSTC Standards Technical Services Co., Ltd. Shenzhen Branch Testing Center-EEC Laboratory.
No.1 Workshop, M-10, Middle Section, Science & Technology Park, Shenzhen, China 518057 t (86–755) 26012053 f (86–755) 26710594 www.sgsgroup.com.cn
中国·深圳·科技园中区M–10栋一号厂房 邮编: 518057 t (86–755) 26012053 f (86–755) 26710594 sgs.china@sgs.com
Member of the SGS Group (SGS SA)

3.7.2 Data Storage

The DASY software stores the acquired data from the data acquisition electronics as raw data (in microvolt readings from the probe sensors), together with all necessary software parameters for the data evaluation (probe calibration data, liquid parameters and device frequency and modulation data) in measurement files with the extension ".DAE4". The software evaluates the desired unit and format for output each time the data is visualized or exported. This allows verification of the complete software setup even after the measurement and allows correction of incorrect parameter settings. For example, if a measurement has been performed with a wrong crest factor parameter in the device setup, the parameter can be corrected afterwards and the data can be re-evaluated. The measured data can be visualized or exported in different units or formats, depending on the selected probe type ([V/m], [A/m], [°C], [m W/g], [m W/cm²], [dBrel], etc.). Some of these units are not available in certain situations or show meaningless results, e.g., a SAR output in a lossless media will always be zero. Raw data can also be exported to perform the evaluation with other software packages.

3.7.3 Data Evaluation by SEMCAD

The SEMCAD software automatically executes the following procedures to calculate the field units from the microvolt readings at the probe connector. The parameters used in the evaluation are stored in the configuration modules of the software:

Probe parameters: - Sensitivity Normi, ai0, ai1, ai2
- Conversion factor ConvFi
- Diode compression point Dcpi
Device parameters: - Frequency f
- Crest factor cf
Media parameters: - Conductivity ε
- Density ρ

These parameters must be set correctly in the software. They can be found in the component documents or they can be imported into the software from the configuration files issued for the DASY components. In the direct measuring mode of the multimeter option, the parameters of the actual system setup are used. In the scan visualization and export modes, the parameters stored in the corresponding document files are used.

The first step of the evaluation is a linearization of the filtered input signal to account for the compression characteristics of the detector diode. The compensation depends on the input signal, the diode type and the DC-transmission factor from the diode to the evaluation electronics.

If the exciting field is pulsed, the crest factor of the signal must be known to correctly compensate for peak power. The formula for each channel can be given as:

$$V_i = U_i + U_i^2 \cdot cf / dcp_i$$

With Vi = compensated signal of channel i (i = x, y, z)
Ui = input signal of channel i (i = x, y, z)
cf = crest factor of exciting field (DASY parameter)
dcp i = diode compression point (DASY parameter)

From the compensated input signals the primary field data for each channel can be evaluated:

E-field probes:

$$E_i = (V_i / Norm_i \cdot ConvF)^{1/2}$$

H-field probes:

$$H_i = (V_i)^{1/2} \cdot (a_{i0} + a_{i1} f + a_{i2} f^2) / f$$

Unless otherwise agreed in writing, this document is issued by the Company subject to its General Conditions of Service printed overleaf, available on request or accessible at http://www.sgs.com/en/Terms-and-Conditions.aspx and, for electronic format documents, subject to Terms and Conditions for Electronic Documents at http://www.sgs.com/en/Terms-and-Conditions/Terms-e-Document.aspx. Attention is drawn to the limitation of liability, indemnification and jurisdiction issues defined therein. Any holder of this document is advised that information contained hereon reflects the Company's findings at the time of its intervention only and within the limits of Client's instructions, if any. The Company's sole responsibility is to its Client and this document does not exonerate parties to a transaction from exercising all their rights and obligations under the transaction documents. This document cannot be reproduced except in full, without prior written approval of the Company. Any unauthorized alteration, forgery or falsification of the content or appearance of this document is unlawful and offenders may be prosecuted to the fullest extent of the law. Unless otherwise stated the results shown in this test report refer only to the sample(s) tested and such sample(s) are retained for 30 days only.
Attention: To check the authenticity of testing /inspection report & certificate, please contact us at telephone: (86-755) 8307 1443, or email: CN.Doccheck@sgs.com
SGS-CSTC Standards Technical Services Co., Ltd. Shenzhen Branch Testing Center-EEC Laboratory.
No.1 Workshop, M-10, Middle Section, Science & Technology Park, Shenzhen, China 518057 t (86–755) 26012053 f (86–755) 26710594 www.sgsgroup.com.cn
中国·深圳·科技园中区M–10栋一号厂房 邮编: 518057 t (86–755) 26012053 f (86–755) 26710594 sgs.china@sgs.com
Member of the SGS Group (SGS SA)

With Vi = compensated signal of channel i (i = x, y, z)
Normi = sensor sensitivity of channel I (i = x, y, z)
[mV/(V/m)2] for E-field Probes
ConvF = sensitivity enhancement in solution
aij = sensor sensitivity factors for H-field probes
f = carrier frequency [GHz]
Ei = electric field strength of channel i in V/m
Hi = magnetic field strength of channel i in A/m

The RSS value of the field components gives the total field strength (Hermitian magnitude):

$$E_{tot} = (E_x^2 + E_Y^2 + E_z^2)^{1/2}$$

The primary field data are used to calculate the derived field units.

$$SAR = (Etot^2 \cdot \sigma) / (\varepsilon \cdot 1000)$$

with SAR = local specific absorption rate in mW/g
Etot = total field strength in V/m
σ= conductivity in [mho/m] or [Siemens/m]
ε= equivalent tissue density in g/cm3

Note that the density is normally set to 1 (or 1.06), to account for actual brain density rather than the density of the simulation liquid. The power flow density is calculated assuming the excitation field to be a free space field.

$$P_{pwe} = E_{tot}^2{}_2 / 3770 \quad \text{or} \quad P_{pwe} = H_{tot}^2 \cdot 37.7$$

with Ppwe = equivalent power density of a plane wave in mW/cm2
Etot = total electric field strength in V/m
Htot = total magnetic field strength in A/m

Unless otherwise agreed in writing, this document is issued by the Company subject to its General Conditions of Service printed overleaf, available on request or accessible at http://www.sgs.com/en/Terms-and-Conditions.aspx and, for electronic format documents, subject to Terms and Conditions for Electronic Documents at http://www.sgs.com/en/Terms-and-Conditions/Terms-e-Document.aspx. Attention is drawn to the limitation of liability, indemnification and jurisdiction issues defined therein. Any holder of this document is advised that information contained hereon reflects the Company's findings at the time of its intervention only and within the limits of Client's instructions, if any. The Company's sole responsibility is to its Client and this document does not exonerate parties to a transaction from exercising all their rights and obligations under the transaction documents. This document cannot be reproduced except in full, without prior written approval of the Company. Any unauthorized alteration, forgery or falsification of the content or appearance of this document is unlawful and offenders may be prosecuted to the fullest extent of the law. Unless otherwise stated the results shown in this test report refer only to the sample(s) tested and such sample(s) are retained for 30 days only.
Attention: To check the authenticity of testing /inspection report & certificate, please contact us at telephone: (86-755) 8307 1443, or email: CN.Doccheck@sgs.com
SGS-CSTC Standards Technical Services Co., Ltd. Shenzhen Branch Testing Center-EEC Laboratory.
No.1 Workshop, M-10, Middle Section, Science & Technology Park, Shenzhen, China 518057 t (86-755) 26012053 f (86-755) 26710594 www.sgsgroup.com.cn
中国·深圳·科技园中区M-10栋一号厂房 邮编: 518057 t (86-755) 26012053 f (86-755) 26710594 sgs.china@sgs.com
Member of the SGS Group (SGS SA)

4 SAR measurement variability and uncertainty

4.1 SAR measurement variability

Per KDB865664 D01 SAR measurement 100 MHz to 6 GHz v01r04, SAR measurement variability must be assessed for each frequency band, which is determined by the SAR probe calibration point and tissue-equivalent medium used for the device measurements. The additional measurements are repeated after the completion of all measurements requiring the same head or body tissue-equivalent medium in a frequency band. The test device should be returned to ambient conditions (normal room temperature) with the battery fully charged before it is re-mounted on the device holder for the repeated measurement(s) to minimize any unexpected variations in the repeated results.

1) Repeated measurement is not required when the original highest measured SAR is < 0.80 W/kg; steps 2) through 4) do not apply.

2) When the original highest measured SAR is ⩾ 0.80 W/kg, repeat that measurement once.

3) Perform a second repeated measurement only if the ratio of largest to smallest SAR for the original and first repeated measurements is > 1.20 or when the original or repeated measurement is ⩾ 1.45 W/kg (~ 10% from the 1-g SAR limit).

4) Perform a third repeated measurement only if the original, first or second repeated measurement is ⩾1.5 W/kg and the ratio of largest to smallest SAR for the original, first and second repeated measurements is > 1.20.

The same procedures should be adapted for measurements according to extremity and occupational exposure limits by applying a factor of 2.5 for extremity exposure and a factor of 5 for occupational exposure to the corresponding SAR thresholds.

Unless otherwise agreed in writing, this document is issued by the Company subject to its General Conditions of Service printed overleaf, available on request or accessible at http://www.sgs.com/en/Terms-and-Conditions.aspx and, for electronic format documents, subject to Terms and Conditions for Electronic Documents at http://www.sgs.com/en/Terms-and-Conditions/Terms-e-Document.aspx. Attention is drawn to the limitation of liability, indemnification and jurisdiction issues defined therein. Any holder of this document is advised that information contained hereon reflects the Company's findings at the time of its intervention only and within the limits of Client's instructions, if any. The Company's sole responsibility is to its Client and this document does not exonerate parties to a transaction from exercising all their rights and obligations under the transaction documents. This document cannot be reproduced except in full, without prior written approval of the Company. Any unauthorized alteration, forgery or falsification of the content or appearance of this document is unlawful and offenders may be prosecuted to the fullest extent of the law. Unless otherwise stated the results shown in this test report refer only to the sample(s) tested and such sample(s) are retained for 30 days only.
Attention: To check the authenticity of testing /inspection report & certificate, please contact us at telephone: (86-755) 8307 1443, or email: CN.Doccheck@sgs.com
SGS-CSTC Standards Technical Services Co., Ltd. Shenzhen Branch Testing Center-EEC Laboratory.
No.1 Workshop, M-10, Middle Section, Science & Technology Park, Shenzhen, China 518057 t (86-755) 26012053 f (86-755) 26710594 www.sgsgroup.com.cn
中国·深圳·科技园中区M-10栋一号厂房 邮编: 518057 t (86-755) 26012053 f (86-755) 26710594 sgs.china@sgs.com
Member of the SGS Group (SGS SA)

4.2 SAR measurement uncertainty

Per KDB865664 D01 SAR Measurement 100 MHz to 6 GHz, when the highest measured 1-g SAR within a frequency band is < 1.5 W/kg, the extensive SAR measurement uncertainty analysis described in IEEE Std 1528-2013 is not required in SAR reports submitted for equipment approval. The equivalent ratio (1.5/1.6) is applied to extremity and occupational exposure conditions.

Unless otherwise agreed in writing, this document is issued by the Company subject to its General Conditions of Service printed overleaf, available on request or accessible at http://www.sgs.com/en/Terms-and-Conditions.aspx and, for electronic format documents, subject to Terms and Conditions for Electronic Documents at http://www.sgs.com/en/Terms-and-Conditions/Terms-e-Document.aspx. Attention is drawn to the limitation of liability, indemnification and jurisdiction issues defined therein. Any holder of this document is advised that information contained hereon reflects the Company's findings at the time of its intervention only and within the limits of Client's instructions, if any. The Company's sole responsibility is to its Client and this document does not exonerate parties to a transaction from exercising all their rights and obligations under the transaction documents. This document cannot be reproduced except in full, without prior written approval of the Company. Any unauthorized alteration, forgery or falsification of the content or appearance of this document is unlawful and offenders may be prosecuted to the fullest extent of the law. Unless otherwise stated the results shown in this test report refer only to the sample(s) tested and such sample(s) are retained for 30 days only.
Attention: To check the authenticity of testing /inspection report & certificate, please contact us at telephone: (86-755) 8307 1443, or email: CN.Doccheck@sgs.com
SGS-CSTC Standards Technical Services Co., Ltd. Shenzhen Branch Testing Center-EEC Laboratory.
No.1 Workshop, M-10, Middle Section, Science & Technology Park, Shenzhen, China 518057 t (86-755) 26012053 f (86-755) 26710594 www.sgsgroup.com.cn
中国·深圳·科技园中区M-10栋一号厂房 邮编: 518057 t (86-755) 26012053 f (86-755) 26710594 sgs.china@sgs.com
Member of the SGS Group (SGS SA)

5 Description of Test Position

5.1 Body Exposure Condition

5.1.1 Wireless Router exposure conditions

Some battery-operated handsets have the capability to transmit and receive user data through simultaneous transmission of WIFI simultaneously with a separate licensed transmitter. The FCC has provided guidance in FCC KDB Publication 941225 D06 where SAR test considerations for handsets (L x W ≥ 9 cm x 5 cm) are based on a composite test separation distance of 10 mm from the front, back and edges of the device containing transmitting antennas within 2.5 cm of their edges, determined from general mixed use conditions for this type of devices. For devices with form factors smaller than 9 cm x 5 cm, a test separation distance of ≤5 mm is required.

Unless otherwise agreed in writing, this document is issued by the Company subject to its General Conditions of Service printed overleaf, available on request or accessible at http://www.sgs.com/en/Terms-and-Conditions.aspx and, for electronic format documents, subject to Terms and Conditions for Electronic Documents at http://www.sgs.com/en/Terms-and-Conditions/Terms-e-Document.aspx. Attention is drawn to the limitation of liability, indemnification and jurisdiction issues defined therein. Any holder of this document is advised that information contained hereon reflects the Company's findings at the time of its intervention only and within the limits of Client's instructions, if any. The Company's sole responsibility is to its Client and this document does not exonerate parties to a transaction from exercising all their rights and obligations under the transaction documents. This document cannot be reproduced except in full, without prior written approval of the Company. Any unauthorized alteration, forgery or falsification of the content or appearance of this document is unlawful and offenders may be prosecuted to the fullest extent of the law. Unless otherwise stated the results shown in this test report refer only to the sample(s) tested and such sample(s) are retained for 30 days only.
Attention: To check the authenticity of testing /inspection report & certificate, please contact us at telephone: (86-755) 8307 1443, or email: CN.Doccheck@sgs.com
SGS-CSTC Standards Technical Services Co., Ltd. Shenzhen Branch Testing Center-EEC Laboratory.
No.1 Workshop, M-10, Middle Section, Science & Technology Park, Shenzhen, China 518057 t (86-755) 26012053 f (86-755) 26710594 www.sgsgroup.com.cn
中国·深圳·科技园中区M-10栋一号厂房 邮编: 518057 t (86-755) 26012053 f (86-755) 26710594 sgs.china@sgs.com
Member of the SGS Group (SGS SA)

6 SAR System Verification Procedure

6.1 Tissue Simulate Liquid

6.1.1 Recipes for Tissue Simulate Liquid

The bellowing tables give the recipes for tissue simulating liquids to be used in different frequency bands：

Ingredients (% by weight)	Frequency (MHz)							
	450		700-950		1700-2000		2300-2700	
Tissue Type	**Head**	**Body**	**Head**	**Body**	**Head**	**Body**	**Head**	**Body**
Water	38.56	51.16	40.30	50.75	55.24	70.17	55.00	68.53
Salt (NaCl)	3.95	1.49	1.38	0.94	0.31	0.39	0.2	0.1
Sucrose	56.32	46.78	57.90	48.21	0	0	0	0
HEC	0.98	0.52	0.24	0	0	0	0	0
Bactericide	0.19	0.05	0.18	0.10	0	0	0	0
Tween	0	0	0	0	44.45	29.44	44.80	31.37
Salt: 99+% Pure Sodium Chloride Water: De-ionized, 16 MΩ+ resistivity Tween: Polyoxyethylene (20) sorbitan monolaurate					Sucrose: 98+% Pure Sucrose HEC: Hydroxyethyl Cellulose			
HSL5GHz is composed of the following ingredients: Water: 50-65% Mineral oil: 10-30% Emulsifiers: 8-25% Sodium salt: 0-1.5%								
MSL5GHz is composed of the following ingredients: Water: 64-78% Mineral oil: 11-18% Emulsifiers: 9-15% Sodium salt: 2-3%								

Table 3： Recipe of Tissue Simulate Liquid

Unless otherwise agreed in writing, this document is issued by the Company subject to its General Conditions of Service printed overleaf, available on request or accessible at http://www.sgs.com/en/Terms-and-Conditions.aspx and, for electronic format documents, subject to Terms and Conditions for Electronic Documents at http://www.sgs.com/en/Terms-and-Conditions/Terms-e-Document.aspx. Attention is drawn to the limitation of liability, indemnification and jurisdiction issues defined therein. Any holder of this document is advised that information contained hereon reflects the Company's findings at the time of its intervention only and within the limits of Client's instructions, if any. The Company's sole responsibility is to its Client and this document does not exonerate parties to a transaction from exercising all their rights and obligations under the transaction documents. This document cannot be reproduced except in full, without prior written approval of the Company. Any unauthorized alteration, forgery or falsification of the content or appearance of this document is unlawful and offenders may be prosecuted to the fullest extent of the law. Unless otherwise stated the results shown in this test report refer only to the sample(s) tested and such sample(s) are retained for 30 days only.
Attention: To check the authenticity of testing /inspection report & certificate, please contact us at telephone: (86-755) 8307 1443, or email: CN.Doccheck@sgs.com
SGS-CSTC Standards Technical Services Co., Ltd. Shenzhen Branch Testing Center-EEC Laboratory.
No.1 Workshop, M-10, Middle Section, Science & Technology Park, Shenzhen, China 518057 t (86-755) 26012053 f (86-755) 26710594 www.sgsgroup.com.cn
中国·深圳·科技园中区M-10栋一号厂房 邮编: 518057 t (86-755) 26012053 f (86-755) 26710594 sgs.china@sgs.com
Member of the SGS Group (SGS SA)

6.1.2 Measurement for Tissue Simulate Liquid

The dielectric properties for this Tissue Simulate Liquids were measured by using the Agilent Model 85070E Dielectric Probe in conjunction with Agilent E5071C Network Analyzer (300 KHz-8500 MHz). The Conductivity (σ) and Permittivity (ρ) are listed in Table 4. For the SAR measurement given in this report. The temperature variation of the Tissue Simulate Liquids was 22±2°C.

Tissue Type	Measured Frequency (MHz)	Target Tissue (±5%)		Measured Tissue		Liquid Temp.	Measured Date
		ε_r	σ(S/m)	ε_r	σ(S/m)	(℃)	
2450 Head	2450	39.2 (37.24~41.16)	1.8 (1.71~1.89)	40.409	1.797	22.0	2019/5/31

Table 4： Measurement result of Tissue electric parameters

Unless otherwise agreed in writing, this document is issued by the Company subject to its General Conditions of Service printed overleaf, available on request or accessible at http://www.sgs.com/en/Terms-and-Conditions.aspx and, for electronic format documents, subject to Terms and Conditions for Electronic Documents at http://www.sgs.com/en/Terms-and-Conditions/Terms-e-Document.aspx. Attention is drawn to the limitation of liability, indemnification and jurisdiction issues defined therein. Any holder of this document is advised that information contained hereon reflects the Company's findings at the time of its intervention only and within the limits of Client's instructions, if any. The Company's sole responsibility is to its Client and this document does not exonerate parties to a transaction from exercising all their rights and obligations under the transaction documents. This document cannot be reproduced except in full, without prior written approval of the Company. Any unauthorized alteration, forgery or falsification of the content or appearance of this document is unlawful and offenders may be prosecuted to the fullest extent of the law. Unless otherwise stated the results shown in this test report refer only to the sample(s) tested and such sample(s) are retained for 30 days only.
Attention: To check the authenticity of testing /inspection report & certificate, please contact us at telephone: (86-755) 8307 1443, or email: CN.Doccheck@sgs.com
SGS-CSTC Standards Technical Services Co., Ltd. Shenzhen Branch Testing Center-EEC Laboratory.
No.1 Workshop, M-10, Middle Section, Science & Technology Park, Shenzhen, China 518057 t (86-755) 26012053 f (86-755) 26710594 www.sgsgroup.com.cn
中国·深圳·科技园中区M-10栋一号厂房 邮编: 518057 t (86-755) 26012053 f (86-755) 26710594 sgs.china@sgs.com
Member of the SGS Group (SGS SA)

6.2 SAR System Check

The microwave circuit arrangement for system Check is sketched in F-3. The daily system accuracy verification occurs within the flat section of the SAM phantom. A SAR measurement was performed to see if the measured SAR was within +/- 10% from the target SAR values. The tests were conducted on the same days as the measurement of the EUT. The obtained results from the system accuracy verification are displayed in the following table (A power level of 250mW (below 3GHz) or 100mW (3-6GHz) was input to the dipole antenna). During the tests, the ambient temperature of the laboratory was in the range 22±2°C, the relative humidity was in the range 60% and the liquid depth above the ear reference points was above 15±0.5 cm in all the cases. It is seen that the system is operating within its specification, as the results are within acceptable tolerance of the reference values.

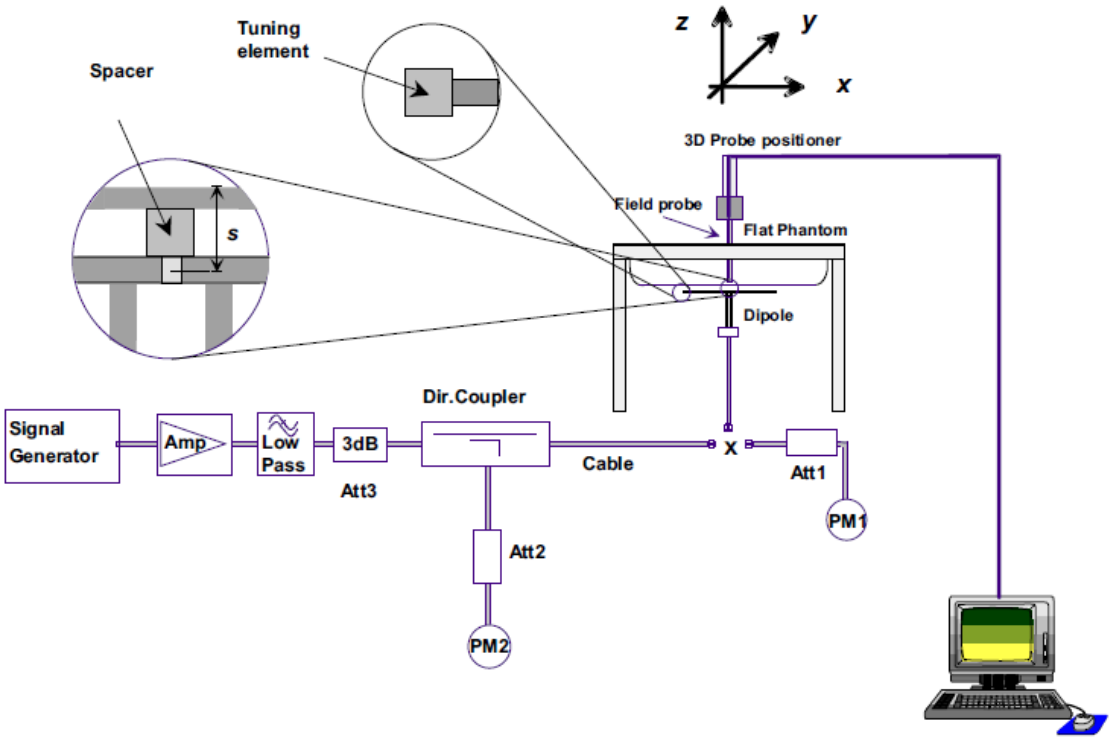

F-3. the microwave circuit arrangement used for SAR system check

Unless otherwise agreed in writing, this document is issued by the Company subject to its General Conditions of Service printed overleaf, available on request or accessible at http://www.sgs.com/en/Terms-and-Conditions.aspx and, for electronic format documents, subject to Terms and Conditions for Electronic Documents at http://www.sgs.com/en/Terms-and-Conditions/Terms-e-Document.aspx. Attention is drawn to the limitation of liability, indemnification and jurisdiction issues defined therein. Any holder of this document is advised that information contained hereon reflects the Company's findings at the time of its intervention only and within the limits of Client's instructions, if any. The Company's sole responsibility is to its Client and this document does not exonerate parties to a transaction from exercising all their rights and obligations under the transaction documents. This document cannot be reproduced except in full, without prior written approval of the Company. Any unauthorized alteration, forgery or falsification of the content or appearance of this document is unlawful and offenders may be prosecuted to the fullest extent of the law. Unless otherwise stated the results shown in this test report refer only to the sample(s) tested and such sample(s) are retained for 30 days only.
Attention: To check the authenticity of testing /inspection report & certificate, please contact us at telephone: (86-755) 8307 1443, or email: CN.Doccheck@sgs.com
SGS-CSTC Standards Technical Services Co., Ltd. Shenzhen Branch Testing Center-EEC Laboratory
No.1 Workshop, M-10, Middle Section, Science & Technology Park, Shenzhen, China 518057 t (86-755) 26012053 f (86-755) 26710594 www.sgsgroup.com.cn
中国·深圳·科技园中区M-10栋一号厂房 邮编: 518057 t (86-755) 26012053 f (86-755) 26710594 sgs.china@sgs.com
Member of the SGS Group (SGS SA)

6.2.1 Justification for Extended SAR Dipole Calibrations

1) Referring to KDB865664 D01 requirements for dipole calibration, instead of the typical annual calibration recommended by measurement standards, longer calibration intervals of up to three years may be considered when it is demonstrated that the SAR target, impedance and return loss of a dipole have remain stable according to the following requirements. Each measured dipole is expected to evaluate with the following criteria at least on annual interval in Appendix C.
a) There is no physical damage on the dipole;
b) System check with specific dipole is within 10% of calibrated value;
c) Return-loss is within 10% of calibrated measurement;
d) Impedance is within 5Ω from the previous measurement.

2) Network analyzer probe calibration against air, distilled water and a shorting block performed before measuring liquid parameters.

Unless otherwise agreed in writing, this document is issued by the Company subject to its General Conditions of Service printed overleaf, available on request or accessible at http://www.sgs.com/en/Terms-and-Conditions.aspx and, for electronic format documents, subject to Terms and Conditions for Electronic Documents at http://www.sgs.com/en/Terms-and-Conditions/Terms-e-Document.aspx. Attention is drawn to the limitation of liability, indemnification and jurisdiction issues defined therein. Any holder of this document is advised that information contained hereon reflects the Company's findings at the time of its intervention only and within the limits of Client's instructions, if any. The Company's sole responsibility is to its Client and this document does not exonerate parties to a transaction from exercising all their rights and obligations under the transaction documents. This document cannot be reproduced except in full, without prior written approval of the Company. Any unauthorized alteration, forgery or falsification of the content or appearance of this document is unlawful and offenders may be prosecuted to the fullest extent of the law. Unless otherwise stated the results shown in this test report refer only to the sample(s) tested and such sample(s) are retained for 30 days only.
Attention: To check the authenticity of testing /inspection report & certificate, please contact us at telephone: (86-755) 8307 1443, or email: CN.Doccheck@sgs.com
SGS-CSTC Standards Technical Services Co., Ltd. Shenzhen Branch Testing Center-EEC Laboratory.
No.1 Workshop, M-10, Middle Section, Science & Technology Park, Shenzhen, China 518057 t (86-755) 26012053 f (86-755) 26710594 www.sgsgroup.com.cn
中国·深圳·科技园中区M-10栋一号厂房 邮编: 518057 t (86-755) 26012053 f (86-755) 26710594 sgs.china@sgs.com
Member of the SGS Group (SGS SA)

6.2.2 Summary System Check Result(s)

Validation Kit		Measured SAR 250mW	Measured SAR 250mW	Measured SAR (normalized to 1W)	Measured SAR (normalized to 1W)	Target SAR (normalized to 1W) (±10%)	Target SAR (normalized to 1W) (±10%)	Liquid Temp. (℃)	Measured Date
		1g (W/kg)	10g (W/kg)	1g (W/kg)	10g (W/kg)	1-g(W/kg)	10-g(W/kg)		
D2450V2	Head	12.40	5.73	49.60	22.92	53.1 (47.79~58.41)	24.9 (22.41~27.39)	22.0	2019/5/31

Table 5： SAR System Check Result

6.2.3 Detailed System Check Results

Please see the Appendix A

Unless otherwise agreed in writing, this document is issued by the Company subject to its General Conditions of Service printed overleaf, available on request or accessible at http://www.sgs.com/en/Terms-and-Conditions.aspx and, for electronic format documents, subject to Terms and Conditions for Electronic Documents at http://www.sgs.com/en/Terms-and-Conditions/Terms-e-Document.aspx. Attention is drawn to the limitation of liability, indemnification and jurisdiction issues defined therein. Any holder of this document is advised that information contained hereon reflects the Company's findings at the time of its intervention only and within the limits of Client's instructions, if any. The Company's sole responsibility is to its Client and this document does not exonerate parties to a transaction from exercising all their rights and obligations under the transaction documents. This document cannot be reproduced except in full, without prior written approval of the Company. Any unauthorized alteration, forgery or falsification of the content or appearance of this document is unlawful and offenders may be prosecuted to the fullest extent of the law. Unless otherwise stated the results shown in this test report refer only to the sample(s) tested and such sample(s) are retained for 30 days only.
Attention: To check the authenticity of testing /inspection report & certificate, please contact us at telephone: (86-755) 8307 1443, or email: CN.Doccheck@sgs.com
SGS-CSTC Standards Technical Services Co., Ltd. Shenzhen Branch Testing Center-EEC Laboratory.
No.1 Workshop, M-10, Middle Section, Science & Technology Park, Shenzhen, China 518057 t (86-755) 26012053 f (86-755) 26710594 www.sgsgroup.com.cn
中国·深圳·科技园中区M-10栋一号厂房 邮编: 518057 t (86-755) 26012053 f (86-755) 26710594 sgs.china@sgs.com
Member of the SGS Group (SGS SA)

7 Test Configuration

7.1 Operation Configurations

7.1.1 WiFi Test Configuration

A Wi-Fi device must be configured to transmit continuously at the required data rate, channel bandwidth and signal modulation, using the highest transmission duty factor supported by the test mode tools for SAR measurement.

- WIFI 2.4G 802.11b

Duty cycle=4.492/4.535=99.05%

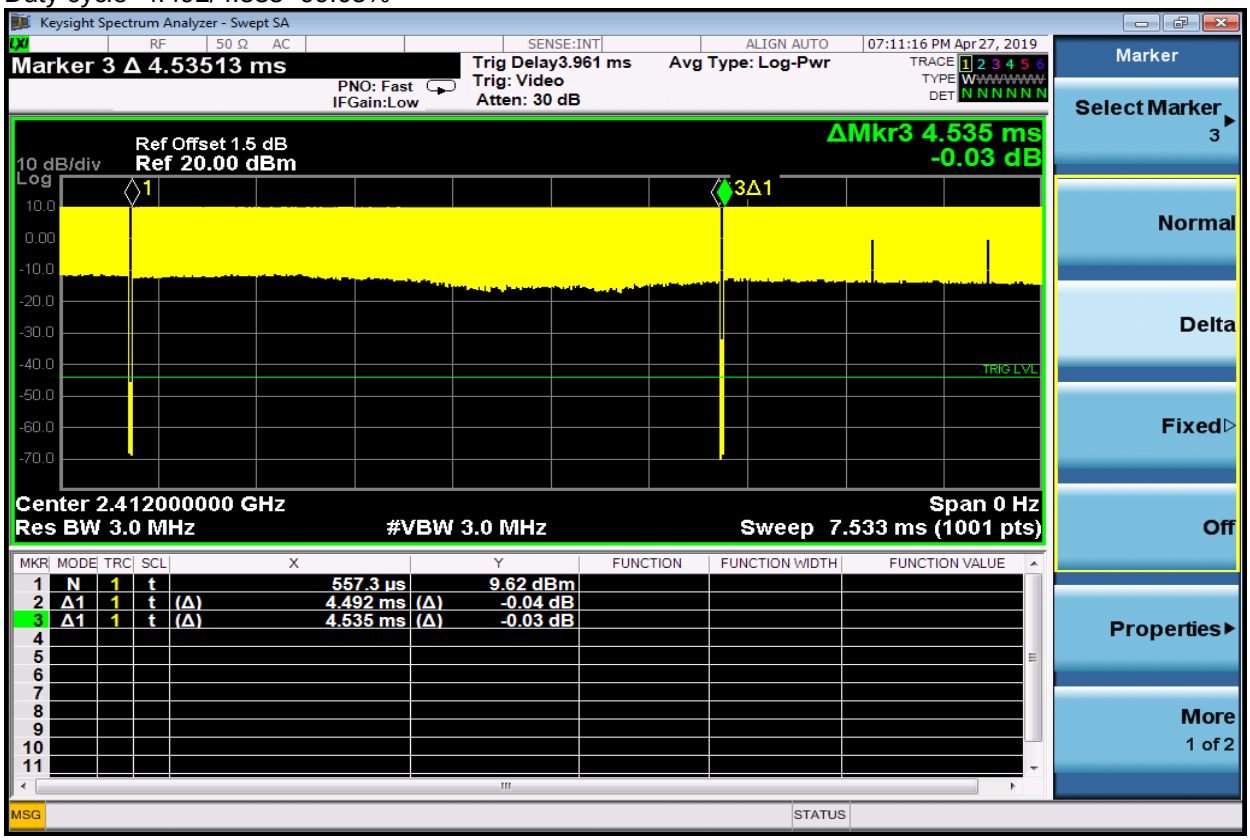

Unless otherwise agreed in writing, this document is issued by the Company subject to its General Conditions of Service printed overleaf, available on request or accessible at http://www.sgs.com/en/Terms-and-Conditions.aspx and, for electronic format documents, subject to Terms and Conditions for Electronic Documents at http://www.sgs.com/en/Terms-and-Conditions/Terms-e-Document.aspx. Attention is drawn to the limitation of liability, indemnification and jurisdiction issues defined therein. Any holder of this document is advised that information contained hereon reflects the Company's findings at the time of its intervention only and within the limits of Client's instructions, if any. The Company's sole responsibility is to its Client and this document does not exonerate parties to a transaction from exercising all their rights and obligations under the transaction documents. This document cannot be reproduced except in full, without prior written approval of the Company. Any unauthorized alteration, forgery or falsification of the content or appearance of this document is unlawful and offenders may be prosecuted to the fullest extent of the law. Unless otherwise stated the results shown in this test report refer only to the sample(s) tested and such sample(s) are retained for 30 days only.
Attention: To check the authenticity of testing /inspection report & certificate, please contact us at telephone: (86-755) 8307 1443, or email: CN.Doccheck@sgs.com
SGS-CSTC Standards Technical Services Co., Ltd. Shenzhen Branch Testing Center-EEC Laboratory
No.1 Workshop, M-10, Middle Section, Science & Technology Park, Shenzhen, China 518057 t (86-755) 26012053 f (86-755) 26710594 www.sgsgroup.com.cn
中国·深圳·科技园中区M-10栋一号厂房 邮编: 518057 t (86-755) 26012053 f (86-755) 26710594 sgs.china@sgs.com
Member of the SGS Group (SGS SA)

7.1.1.1 Initial Test Position SAR Test Reduction Procedure

DSSS and OFDM configurations are considered separately according to the required SAR procedures. SAR is measured in the initial test position using the 802.11 transmission mode configuration required by the DSSS procedure or initial test configuration and subsequent test configuration(s) according to the OFDM procedures. The initial test position procedure is described in the following:

1）. When the reported SAR of the initial test position is ≤ 0.4 W/kg, further SAR measurement is not required for the other (remaining) test positions in that exposure configuration and 802.11 transmission mode combinations within the frequency band or aggregated band. SAR is also not required for that exposure configuration in the subsequent test configuration(s).

2）. When the reported SAR of the initial test position is > 0.4 W/kg, SAR is repeated for the 802.11 transmission mode configuration tested in the initial test position using subsequent highest extrapolated or estimated 1-g SAR conditions determined by area scans or next closest/smallest test separation distance and maximum RF coupling test positions based on manufacturer justification, on the highest maximum output power channel, until the reported SAR is ≤ 0.8 W/kg or all required test positions (left, right, touch, tilt or subsequent surfaces and edges) are tested.

3）. For all positions/configurations tested using the initial test position and subsequent test positions, when the reported SAR is > 0.8 W/kg, SAR is measured for these test positions/configurations on the subsequent next highest measured output power channel(s) until the reported SAR is ≤ 1.2 W/kg or all required channels are tested. a) Additional power measurements may be required for this step, which should be limited to those necessary for identifying the subsequent highest output power channels.

Unless otherwise agreed in writing, this document is issued by the Company subject to its General Conditions of Service printed overleaf, available on request or accessible at http://www.sgs.com/en/Terms-and-Conditions.aspx and, for electronic format documents, subject to Terms and Conditions for Electronic Documents at http://www.sgs.com/en/Terms-and-Conditions/Terms-e-Document.aspx. Attention is drawn to the limitation of liability, indemnification and jurisdiction issues defined therein. Any holder of this document is advised that information contained hereon reflects the Company's findings at the time of its intervention only and within the limits of Client's instructions, if any. The Company's sole responsibility is to its Client and this document does not exonerate parties to a transaction from exercising all their rights and obligations under the transaction documents. This document cannot be reproduced except in full, without prior written approval of the Company. Any unauthorized alteration, forgery or falsification of the content or appearance of this document is unlawful and offenders may be prosecuted to the fullest extent of the law. Unless otherwise stated the results shown in this test report refer only to the sample(s) tested and such sample(s) are retained for 30 days only.
Attention: To check the authenticity of testing /inspection report & certificate, please contact us at telephone: (86-755) 8307 1443, or email: CN.Doccheck@sgs.com
SGS-CSTC Standards Technical Services Co., Ltd. Shenzhen Branch Testing Center-EEC Laboratory.
No.1 Workshop, M-10, Middle Section, Science & Technology Park, Shenzhen, China 518057 t (86-755) 26012053 f (86-755) 26710594 www.sgsgroup.com.cn
中国·深圳·科技园中区M-10栋一号厂房 邮编: 518057 t (86-755) 26012053 f (86-755) 26710594 sgs.china@sgs.com
Member of the SGS Group (SGS SA)

7.1.1.2 Initial Test Configuration Procedures

An initial test configuration is determined for OFDM transmission modes according to the channel bandwidth, modulation and data rate combination(s) with the highest maximum output power specified for production units in each standalone and aggregated frequency band. SAR is measured using the highest measured maximum output power channel. For configurations with the same specified or measured maximum output power, additional transmission mode and test channel selection procedures are required. SAR test reduction for subsequent highest output test channels is determined according to *reported* SAR of the initial test configuration.
For next to the ear, hotspot mode and UMC mini-tablet exposure configurations where multiple test positions are required, the initial test position procedure is applied to minimize the number of test positions required for SAR measurement using the initial test configuration transmission mode. For fixed exposure conditions that do not have multiple SAR test positions, SAR is measured in the transmission mode determined by the initial test configuration.
When the *reported* SAR of the initial test configuration is > 0.8 W/kg, SAR measurement is required for subsequent next highest measured output power channel(s) in the initial test configuration until *reported* SAR is ≤ 1.2 W/kg or all required channels are tested.

7.1.1.3 Subsequent Test Configuration Procedures

SAR measurement requirements for the remaining 802.11 transmission mode configurations that have not been tested in the initial test configuration are determined separately for each standalone and aggregated frequency band, in each exposure condition, according to the maximum output power specified for production units. The initial test position procedure is applied to next to the ear, UMPC mini-tablet and hotspot mode configurations. When the same maximum output power is specified for multiple transmission modes, additional power measurements may be required to determine if SAR measurements are required for subsequent highest output power channels in a subsequent test configuration. The subsequent test configuration and SAR measurement procedures are described in the following.

1）. When SAR test exclusion provisions of KDB Publication 447498 are applicable and SAR measurement is not required for the initial test configuration, SAR is also not required for the next highest maximum output power transmission mode subsequent test configuration(s) in that frequency band or aggregated band and exposure configuration.

2）. When the highest *reported* SAR for the initial test configuration (when applicable, include subsequent highest output channels), according to the initial test position or fixed exposure position requirements, is adjusted by the ratio of the subsequent test configuration to initial test configuration specified maximum output power and the adjusted SAR is ≤ 1.2 W/kg, SAR is not required for that subsequent test configuration.

3）. The number of channels in the initial test configuration and subsequent test configuration can be different due to differences in channel bandwidth. When SAR measurement is required for a subsequent test configuration and the channel bandwidth is smaller than that in the initial test configuration, all channels in the subsequent test configuration that overlap with the larger bandwidth channel tested in the initial test configuration should be used to determine the highest maximum output power channel. This step requires additional power measurement to identify the highest maximum output power channel in the subsequent test configuration to determine SAR test reduction.

a)SAR should first be measured for the channel with highest measured output power in the subsequent test configuration.

b) SAR for subsequent highest measured maximum output power channels in the subsequent test configuration is required only when the *reported* SAR of the preceding higher maximum output power channel(s) in the subsequent test configuration is > 1.2 W/kg or until all required channels are tested. i) For channels with the same measured maximum output power, SAR should be measured using the channel closest to the center frequency of the larger channel bandwidth channel in the initial test configuration.

Unless otherwise agreed in writing, this document is issued by the Company subject to its General Conditions of Service printed overleaf, available on request or accessible at http://www.sgs.com/en/Terms-and-Conditions.aspx and, for electronic format documents, subject to Terms and Conditions for Electronic Documents at http://www.sgs.com/en/Terms-and-Conditions/Terms-e-Document.aspx. Attention is drawn to the limitation of liability, indemnification and jurisdiction issues defined therein. Any holder of this document is advised that information contained hereon reflects the Company's findings at the time of its intervention only and within the limits of Client's instructions, if any. The Company's sole responsibility is to its Client and this document does not exonerate parties to a transaction from exercising all their rights and obligations under the transaction documents. This document cannot be reproduced except in full, without prior written approval of the Company. Any unauthorized alteration, forgery or falsification of the content or appearance of this document is unlawful and offenders may be prosecuted to the fullest extent of the law. Unless otherwise stated the results shown in this test report refer only to the sample(s) tested and such sample(s) are retained for 30 days only.
Attention: To check the authenticity of testing /inspection report & certificate, please contact us at telephone: (86-755) 8307 1443, or email: CN.Doccheck@sgs.com
SGS-CSTC Standards Technical Services Co., Ltd. Shenzhen Branch Testing Center-EEC Laboratory
No.1 Workshop, M-10, Middle Section, Science & Technology Park, Shenzhen, China 518057 t (86-755) 26012053 f (86-755) 26710594 www.sgsgroup.com.cn
中国·深圳·科技园中区M-10栋一号厂房 邮编: 518057 t (86-755) 26012053 f (86-755) 26710594 sgs.china@sgs.com
Member of the SGS Group (SGS SA)

4）. SAR measurements for the remaining highest specified maximum output power OFDM transmission mode configurations that have not been tested in the initial test configuration (highest maximum output) or subsequent test configuration(s) (subsequent next highest maximum output power) is determined by recursively applying the subsequent test configuration procedures in this section to the remaining configurations according to the following:

a)replace “subsequent test configuration” with “next subsequent test configuration” (i.e., subsequent next highest specified maximum output power configuration)

b) replace “initial test configuration” with “all tested higher output power configurations”

7.1.1.4 2.4 GHz SAR Procedures

Separate SAR procedures are applied to DSSS and OFDM configurations in the 2.4 GHz band to simplify DSSS test requirements. For 802.11b DSSS SAR measurements, DSSS SAR procedure applies to fixed exposure test position and initial test position procedure applies to multiple exposure test positions. When SAR measurement is required for an OFDM configuration, the initial test configuration, subsequent test configuration and initial test position procedures are applied. The SAR test exclusion requirements for 802.11g/n OFDM configurations are described in following.

- **802.11b DSSS SAR Test Requirements**

SAR is measured for 2.4 GHz 802.11b DSSS using either a fixed test position or, when applicable, the initial test position procedure. SAR test reduction is determined according to the following:

1）. When the reported SAR of the highest measured maximum output power channel for the exposure configuration is ≤ 0.8 W/kg, no further SAR testing is required for 802.11b DSSS in that exposure configuration.

2）. When the reported SAR is > 0.8 W/kg, SAR is required for that exposure configuration using the next highest measured output power channel. When any reported SAR is > 1.2 W/kg, SAR is required for the third channel; i.e., all channels require testing.

- **2.4 GHz 802.11g/n OFDM SAR Test Exclusion Requirements**

When SAR measurement is required for 2.4 GHz 802.11g/n OFDM configurations, the measurement and test reduction procedures for OFDM are applied (section 5.3, including sub-sections). SAR is not required for the following 2.4 GHz OFDM conditions.

1）. When KDB Publication 447498 SAR test exclusion applies to the OFDM configuration.

2）. When the highest reported SAR for DSSS is adjusted by the ratio of OFDM to DSSS specified maximum output power and the adjusted SAR is ≤ 1.2 W/kg.

Unless otherwise agreed in writing, this document is issued by the Company subject to its General Conditions of Service printed overleaf, available on request or accessible at http://www.sgs.com/en/Terms-and-Conditions.aspx and, for electronic format documents, subject to Terms and Conditions for Electronic Documents at http://www.sgs.com/en/Terms-and-Conditions/Terms-e-Document.aspx. Attention is drawn to the limitation of liability, indemnification and jurisdiction issues defined therein. Any holder of this document is advised that information contained hereon reflects the Company's findings at the time of its intervention only and within the limits of Client's instructions, if any. The Company's sole responsibility is to its Client and this document does not exonerate parties to a transaction from exercising all their rights and obligations under the transaction documents. This document cannot be reproduced except in full, without prior written approval of the Company. Any unauthorized alteration, forgery or falsification of the content or appearance of this document is unlawful and offenders may be prosecuted to the fullest extent of the law. Unless otherwise stated the results shown in this test report refer only to the sample(s) tested and such sample(s) are retained for 30 days only.
Attention: To check the authenticity of testing /inspection report & certificate, please contact us at telephone: (86-755) 8307 1443, or email: CN.Doccheck@sgs.com
SGS-CSTC Standards Technical Services Co., Ltd. Shenzhen Branch Testing Center-EEC Laboratory.
No.1 Workshop, M-10, Middle Section, Science & Technology Park, Shenzhen, China 518057 t (86-755) 26012053 f (86-755) 26710594 www.sgsgroup.com.cn
中国·深圳·科技园中区M-10栋一号厂房 邮编: 518057 t (86-755) 26012053 f (86-755) 26710594 sgs.china@sgs.com
Member of the SGS Group (SGS SA)

8 Test Result

8.1 Measurement of RF conducted Power

8.1.1 Conducted Power of WIFI and BT

Mode	Channel	Frequency(MHz)	Data Rate(Mbps)	Tune up	Average Power (dBm)	SAR Test
802.11b	1	2412	1	16.00	**15.14**	Yes
	6	2437		16.00	**15.09**	Yes
	11	2462		16.00	**15.94**	Yes
802.11g	1	2412	6	14.00	13.39	NO
	11	2462		14.00	13.29	NO
802.11n HT20 SISO	1	2412	6.5	14.00	13.23	NO
	6	2437		14.00	12.95	NO
	11	2462		14.00	13.05	NO

Table 6： Conducted Power of WiFi 2.4G

BLE			Tune up (dBm)	Average Conducted Power(dBm)
Modulation	Channel	Frequency(MHz)		
GFSK	0	2402	-1.00	-1.27
	19	2440	-1.00	-2.18
	39	2480	-1.00	-2.84

Table 7： Conducted Power of BT

Unless otherwise agreed in writing, this document is issued by the Company subject to its General Conditions of Service printed overleaf, available on request or accessible at http://www.sgs.com/en/Terms-and-Conditions.aspx and, for electronic format documents, subject to Terms and Conditions for Electronic Documents at http://www.sgs.com/en/Terms-and-Conditions/Terms-e-Document.aspx. Attention is drawn to the limitation of liability, indemnification and jurisdiction issues defined therein. Any holder of this document is advised that information contained hereon reflects the Company's findings at the time of its intervention only and within the limits of Client's instructions, if any. The Company's sole responsibility is to its Client and this document does not exonerate parties to a transaction from exercising all their rights and obligations under the transaction documents. This document cannot be reproduced except in full, without prior written approval of the Company. Any unauthorized alteration, forgery or falsification of the content or appearance of this document is unlawful and offenders may be prosecuted to the fullest extent of the law. Unless otherwise stated the results shown in this test report refer only to the sample(s) tested and such sample(s) are retained for 30 days only.
Attention: To check the authenticity of testing /inspection report & certificate, please contact us at telephone: (86-755) 8307 1443, or email: CN.Doccheck@sgs.com
SGS-CSTC Standards Technical Services Co.,Ltd. Shenzhen Branch Testing Center-EEC Laboratory.
No.1 Workshop, M-10, Middle Section, Science & Technology Park, Shenzhen, China 518057 t (86-755) 26012053 f (86-755) 26710594 www.sgsgroup.com.cn
中国·深圳·科技园中区M-10栋一号厂房 邮编: 518057 t (86-755) 26012053 f (86-755) 26710594 sgs.china@sgs.com
Member of the SGS Group (SGS SA)

8.2 Stand-alone SAR test evaluation

Unless specifically required by the published RF exposure KDB procedures, standalone 1-g head or body and 10-g extremity SAR evaluation for general population exposure conditions, by measurement or numerical simulation, is not required when the corresponding SAR Test Exclusion Threshold condition is satisfied. These test exclusion conditions are based on source-based time-averaged maximum conducted output power of the RF channel requiring evaluation, adjusted for tune-up tolerance, and the minimum test separation distance required for the exposure conditions.

Freq. Band	Frequency (GHz)	Position	Tune Up		Test Separation (mm)	Calculate Value	Exclusion Threshold	Exclusion (Y/N)
			dBm	mW				
Wi-Fi	2.48	Body 0mm	16.00	39.81	0	12.539	3.0	N
BT	2.48	Body 0mm	-1.00	0.790	0	0.083	3.0	Y

The 1-g and 10-g SAR test exclusion thresholds for 100 MHz to 6 GHz at test separation distances ≤ 50 mm are determined by:

[(max. power of channel, including tune-up tolerance, mW)/(min. test separation distance, mm)] · [√f(GHz)] ≤ 3.0 for 1-g SAR and ≤ 7.5 for 10-g extremity SAR, where

- f(GHz) is the RF channel transmit frequency in GHz
- Power and distance are rounded to the nearest mW and mm before calculation
- The result is rounded to one decimal place for comparison

The test exclusions are applicable only when the minimum test separation distance is ≤ 50 mm and for transmission frequencies between 100 MHz and 6 GHz. When the minimum test separation distance is < 5 mm, a distance of 5 mm is applied to determine SAR test exclusion.

Unless otherwise agreed in writing, this document is issued by the Company subject to its General Conditions of Service printed overleaf, available on request or accessible at http://www.sgs.com/en/Terms-and-Conditions.aspx and, for electronic format documents, subject to Terms and Conditions for Electronic Documents at http://www.sgs.com/en/Terms-and-Conditions/Terms-e-Document.aspx. Attention is drawn to the limitation of liability, indemnification and jurisdiction issues defined therein. Any holder of this document is advised that information contained hereon reflects the Company's findings at the time of its intervention only and within the limits of Client's instructions, if any. The Company's sole responsibility is to its Client and this document does not exonerate parties to a transaction from exercising all their rights and obligations under the transaction documents. This document cannot be reproduced except in full, without prior written approval of the Company. Any unauthorized alteration, forgery or falsification of the content or appearance of this document is unlawful and offenders may be prosecuted to the fullest extent of the law. Unless otherwise stated the results shown in this test report refer only to the sample(s) tested and such sample(s) are retained for 30 days only.
Attention: To check the authenticity of testing /inspection report & certificate, please contact us at telephone: (86-755) 8307 1443, or email: CN.Doccheck@sgs.com
SGS-CSTC Standards Technical Services Co., Ltd. Shenzhen Branch Testing Center-EEC Laboratory.
No.1 Workshop, M-10, Middle Section, Science & Technology Park, Shenzhen, China 518057 t (86-755) 26012053 f (86-755) 26710594 www.sgsgroup.com.cn
中国·深圳·科技园中区M-10栋一号厂房 邮编: 518057 t (86-755) 26012053 f (86-755) 26710594 sgs.china@sgs.com
Member of the SGS Group (SGS SA)

8.3 Measurement of SAR Data

8.3.1 SAR Results of WIFI 2.4G

Test position	Test mode	Test Ch./Freq.	Duty Cycle	Duty Cycle Scaled factor	SAR (W/kg) 1-g	Power drift(dB)	Conducted power (dBm)	Tune up Limit (dBm)	Scaled factor	Scaled SAR (W/kg)	Liquid Temp.
Body Test data (Separate 0mm)											
Front side	802.11b	11/2462	99.05%	1.010	0.023	0.02	15.94	16.00	1.014	0.023	22.0
Back side	802.11b	11/2462	99.05%	1.010	0.089	0.13	15.94	16.00	1.014	0.091	22.0
Left side	802.11b	11/2462	99.05%	1.010	1.100	-0.07	15.94	16.00	1.014	1.126	22.0
Left side	802.11b	1/2412	99.05%	1.010	1.170	-0.01	15.14	16.00	1.219	**1.440**	22.0
Left side -repeat	802.11b	1/2412	99.05%	1.010	1.150	0.01	15.14	16.00	1.219	1.416	22.0
Left side	802.11b	6/2437	99.05%	1.010	1.110	-0.05	15.09	16.00	1.233	1.382	22.0
Right side	802.11b	11/2462	99.05%	1.010	0.049	0.04	15.94	16.00	1.014	0.050	22.0
Top side	802.11b	11/2462	99.05%	1.010	0.062	-0.07	15.94	16.00	1.014	0.064	22.0
Bottom side	802.11b	11/2462	99.05%	1.010	0.222	-0.04	15.94	16.00	1.014	0.227	22.0

Table 8： SAR of WIFI for Body.

Note:

1) The Scaled SAR value are marked in bold**.** Graph results refer to Appendix B

Test Position	Channel/ Frequency (MHz)	Measured SAR (1g)	1st Repeated SAR (1g)	Ratio	2nd Repeated SAR (1g)	3rd Repeated SAR (1g)
Left side	1/2412	1.170	1.150	1.017	N/A	N/A
Note: 1) When the original highest measured SAR is ≥ 0.80 W/kg, the measurement was repeated once.						
2) A second repeated measurement was performed only if the ratio of largest to smallest SAR for the original and first repeated measurements was > 1.20 or when the original or repeated measurement was ≥ 1.45 W/kg (~ 10% from the 1-g SAR limit).						
3) A third repeated measurement was performed only if the original, first or second repeated measurement was ≥ 1.5 W/kg and the ratio of largest to smallest SAR for the original, first and second repeated measurements is > 1.20.						
4) Repeated measurements are not required when the original highest measured SAR is < 0.80 W/kg						

Mode	Tune-up (dBm)	Tune-up (mw)	Max Reported SAR1-g(W/kg)	Adjusted SAR1-g(W/kg)	SAR test
802.11b	16.00	39.81	1.440	/	Yes
802.11g	14.00	25.12	/	0.909	No
802.1n 20M	14.00	25.12	/	0.909	No

Note: Per KDB248227D01, for SAR test of WiFi 2.4G,
1) SAR is measured for 2.4 GHz 802.11b DSSS using the initial test position procedure.
2) As the highest *reported* SAR for DSSS is adjusted by the ratio of OFDM 802.11g/n to DSSS specified maximum output power and the adjusted SAR is < 1.2 W/kg, so SAR for 802.11g/n is not required.

Unless otherwise agreed in writing, this document is issued by the Company subject to its General Conditions of Service printed overleaf, available on request or accessible at http://www.sgs.com/en/Terms-and-Conditions.aspx and, for electronic format documents, subject to Terms and Conditions for Electronic Documents at http://www.sgs.com/en/Terms-and-Conditions/Terms-e-Document.aspx. Attention is drawn to the limitation of liability, indemnification and jurisdiction issues defined therein. Any holder of this document is advised that information contained hereon reflects the Company's findings at the time of its intervention only and within the limits of Client's instructions, if any. The Company's sole responsibility is to its Client and this document does not exonerate parties to a transaction from exercising all their rights and obligations under the transaction documents. This document cannot be reproduced except in full, without prior written approval of the Company. Any unauthorized alteration, forgery or falsification of the content or appearance of this document is unlawful and offenders may be prosecuted to the fullest extent of the law. Unless otherwise stated the results shown in this test report refer only to the sample(s) tested and such sample(s) are retained for 30 days only.
Attention: To check the authenticity of testing /inspection report & certificate, please contact us at telephone: (86-755) 8307 1443, or email: CN.Doccheck@sgs.com
SGS-CSTC Standards Technical Services Co., Ltd. Shenzhen Branch Testing Center-EEC Laboratory
No.1 Workshop, M-10, Middle Section, Science & Technology Park, Shenzhen, China 518057 t (86-755) 26012053 f (86-755) 26710594 www.sgsgroup.com.cn
中国·深圳·科技园中区M-10栋一号厂房 邮编: 518057 t (86-755) 26012053 f (86-755) 26710594 sgs.china@sgs.com
Member of the SGS Group (SGS SA)

9 Equipment list

Test Platform	SPEAG DASY5 Professional
Location	SGS-CSTC Standards Technical Services Co., Ltd. Shenzhen Branch
Description	SAR Test System (Frequency range 300MHz-6GHz)
Software Reference	DASY52 52.8.8(1222); SEMCAD X 14.6.10(7331)

Hardware Reference

	Equipment	Manufacturer	Model	Serial Number	Calibration Date	Due date of calibration
☒	Robot	Staubli	RX90L	F03/5V32A1/A01	NCR	NCR
☒	Twin Phantom	SPEAG	SAM 2	1913	NCR	NCR
☒	DAE	SPEAG	DAE3	414	2018-12-03	2019-12-02
☒	E-Field Probe	SPEAG	EX3DV4	3793	2019-03-25	2020-03-25
☒	Validation Kits	SPEAG	D2450V2	733	2016-12-07	2019-12-06
☒	Agilent Network Analyzer	Agilent	E5071C	MY46523590	2019-04-12	2020-04-11
☒	Dielectric Probe Kit	Agilent	85070E	US01440210	NCR	NCR
☒	RF Bi-Directional Coupler	Agilent	86205-60001	MY31400031	NCR	NCR
☒	Signal Generator	Agilent	N5171B	MY53050736	2019-04-12	2020-04-11
☒	Preamplifier	Mini-Circuits	ZHL-42W	15542	NCR	NCR
☒	Power Meter	Agilent	E4416A	GB41292095	2019-04-12	2020-04-11
☒	Power Sensor	Agilent	8481H	MY41091234	2019-04-12	2020-04-11
☒	Power Sensor	R&S	NRP-Z92	100025	2019-04-12	2020-04-11
☒	Attenuator	SHX	TS2-3dB	30704	NCR	NCR
☒	Coaxial low pass filter	Mini-Circuits	VLF-2500(+)	NA	NCR	NCR
☒	Coaxial low pass filter	Microlab Fxr	LA-F13	NA	NCR	NCR
☒	50 Ω coaxial load	Mini-Circuits	KARN-50+	00850	NCR	NCR
☒	DC POWER SUPPLY	SAKO	SK1730SL5A	NA	NCR	NCR
☒	Speed reading thermometer	MingGao	T809	NA	2019-04-15	2020-04-14
☒	Humidity and Temperature Indicator	KIMTOKA	KIMTOKA	NA	2019-04-15	2020-04-14

Note: All the equipments are within the valid period when the tests are performed.

Unless otherwise agreed in writing, this document is issued by the Company subject to its General Conditions of Service printed overleaf, available on request or accessible at http://www.sgs.com/en/Terms-and-Conditions.aspx and, for electronic format documents, subject to Terms and Conditions for Electronic Documents at http://www.sgs.com/en/Terms-and-Conditions/Terms-e-Document.aspx. Attention is drawn to the limitation of liability, indemnification and jurisdiction issues defined therein. Any holder of this document is advised that information contained hereon reflects the Company's findings at the time of its intervention only and within the limits of Client's instructions, if any. The Company's sole responsibility is to its Client and this document does not exonerate parties to a transaction from exercising all their rights and obligations under the transaction documents. This document cannot be reproduced except in full, without prior written approval of the Company. Any unauthorized alteration, forgery or falsification of the content or appearance of this document is unlawful and offenders may be prosecuted to the fullest extent of the law. Unless otherwise stated the results shown in this test report refer only to the sample(s) tested and such sample(s) are retained for 30 days only.
Attention: To check the authenticity of testing /inspection report & certificate, please contact us at telephone: (86-755) 8307 1443, or email: CN.Doccheck@sgs.com
SGS-CSTC Standards Technical Services Co., Ltd. Shenzhen Branch Testing Center-EEC Laboratory.
No.1 Workshop, M-10, Middle Section, Science & Technology Park, Shenzhen, China 518057 t (86-755) 26012053 f (86-755) 26710594 www.sgsgroup.com.cn
中国·深圳·科技园中区M-10栋一号厂房 邮编: 518057 t (86-755) 26012053 f (86-755) 26710594 sgs.china@sgs.com
Member of the SGS Group (SGS SA)

10 Calibration certificate

Please see the Appendix C

11 Photographs

Please see the Appendix D

Appendix A: Detailed System Check Results

Appendix B: Detailed Test Results

Appendix C: Calibration Certificate

Appendix D: Photographs

---END---

Unless otherwise agreed in writing, this document is issued by the Company subject to its General Conditions of Service printed overleaf, available on request or accessible at http://www.sgs.com/en/Terms-and-Conditions.aspx and, for electronic format documents, subject to Terms and Conditions for Electronic Documents at http://www.sgs.com/en/Terms-and-Conditions/Terms-e-Document.aspx. Attention is drawn to the limitation of liability, indemnification and jurisdiction issues defined therein. Any holder of this document is advised that information contained hereon reflects the Company's findings at the time of its intervention only and within the limits of Client's instructions, if any. The Company's sole responsibility is to its Client and this document does not exonerate parties to a transaction from exercising all their rights and obligations under the transaction documents. This document cannot be reproduced except in full, without prior written approval of the Company. Any unauthorized alteration, forgery or falsification of the content or appearance of this document is unlawful and offenders may be prosecuted to the fullest extent of the law. Unless otherwise stated the results shown in this test report refer only to the sample(s) tested and such sample(s) are retained for 30 days only.
Attention: To check the authenticity of testing /inspection report & certificate, please contact us at telephone: (86-755) 8307 1443, or email: CN.Doccheck@sgs.com
SGS-CSTC Standards Technical Services Co., Ltd. Shenzhen Branch Testing Center-EEC Laboratory.
No.1 Workshop, M-10, Middle Section, Science & Technology Park, Shenzhen, China 518057 t (86-755) 26012053 f (86-755) 26710594 www.sgsgroup.com.cn
中国·深圳·科技园中区M-10栋一号厂房 邮编: 518057 t (86-755) 26012053 f (86-755) 26710594 sgs.china@sgs.com
Member of the SGS Group (SGS SA)