FCC RADIO TEST REPORT
FCC ID: 2ASEF-PMA10

Product: PMA
Trade Mark: N/A
Model No.: PMA1.0
Serial Model: N/A
Report No.: S18112901801001
Issue Date: 06 Jan. 2019

Prepared for

Beijing Roobo Technology Co., Ltd.
Room 5-128, B1, Building C, Galaxy SOHO, Dongcheng District, Beijing, China

Prepared by

Shenzhen NTEK Testing Technology Co., Ltd.
1/F, Building E, Fenda Science Park, Sanwei Community, Xixiang Street Bao'an District, Shenzhen 518126 P.R. China
Tel.: +86-755-6115 9388
Fax.: +86-755-6115 6599
Website:http://www.ntek.org.cn

TABLE OF CONTENTS

1 TEST RESULT CERTIFICATION 3

2 SUMMARY OF TEST RESULTS 4

3 FACILITIES AND ACCREDITATIONS 5

3.1 FACILITIES 5
3.2 LABORATORY ACCREDITATIONS AND LISTINGS 5
2.3 MEASUREMENT UNCERTAINTY 5

4 GENERAL DESCRIPTION OF EUT 6

5 DESCRIPTION OF TEST MODES 8

6 SETUP OF EQUIPMENT UNDER TEST 10

6.1 BLOCK DIAGRAM CONFIGURATION OF TEST SYSTEM 10
6.2 SUPPORT EQUIPMENT 11
6.3 EQUIPMENTS LIST FOR ALL TEST ITEMS 12

7 TEST REQUIREMENTS 14

7.1 CONDUCTED EMISSIONS TEST 14
7.2 RADIATED SPURIOUS EMISSION 19
7.3 6DB BANDWIDTH 28
7.4 DUTY CYCLE 32
7.5 MAXIMUM OUTPUT POWER 34
7.6 POWER SPECTRAL DENSITY 36
7.7 CONDUCTED BAND EDGE MEASUREMENT 40
7.8 SPURIOUS RF CONDUCTED EMISSIONS 44
7.9 ANTENNA APPLICATION 57

1 TEST RESULT CERTIFICATION

Applicant's name ..... :	Beijing Roobo Technology Co., Ltd.
Address ..... :	Room 5-128, B1, Building C, Galaxy SOHO, Dongcheng District, Beijing China
Manufacturer's Name1 ..... :	Beijing Roobo Technology Co., Ltd.
Address ..... :	Room 5-128, B1, Building C, Galaxy SOHO, Dongcheng District, Beijing China
Product description	
Product name ..... :	PMA
Model and/or type reference ..... :	PMA1.0
Serial Model ..... :	N/A

Measurement Procedure Used:

APPLICABLE STANDARDS	
APPLICABLE STANDARD/ TEST PROCEDURE	TEST RESULT
FCC 47 CFR Part 2, Subpart J FCC 47 CFR Part 15, Subpart C KDB 174176 D01 Line Conducted FAQ v01r01 FCC KDB 662911 D01 Multiple Transmitter Output v02r01 FCC KDB 662911 D02 MIMO With Cross Polarized Antenna V01 ANSI C63.10-2013 FCC KDB 558074 D01 DTS Meas Guidance v05	Complied

This device described above has been tested by Shenzhen NTEK Testing Technology Co., Ltd., and the test results show that the equipment under test (EUT) is in compliance with the FCC requirements. And it is applicable only to the tested sample identified in the report.
This report shall not be reproduced except in full, without the written approval of Shenzhen NTEK Testing Technology Co., Ltd., this document may be altered or revised by Shenzhen NTEK Testing Technology Co., Ltd., personnel only, and shall be noted in the revision of the document.
The test results of this report relate only to the tested sample identified in this report.

Date of Test : 29 Nov. 2018 ~ 05 Jan. 2019

Testing Engineer : Loren · Luo
(Loren Luo)

Technical Manager : Jason chen
(Jason Chen)

Authorized Signatory : Sam . Chen
(Sam Chen)

2 SUMMARY OF TEST RESULTS

FCC Part15 (15.247), Subpart C			
Standard Section	**Test Item**	**Verdict**	**Remark**
15.207	Conducted Emission	PASS	
15.247 (a)(2)	6dB Bandwidth	PASS	
15.247 (b)	Maximum Output Power	PASS	
15.247 (c)	Radiated Spurious Emission	PASS	
15.247 (d)	Power Spectral Density	PASS	
15.205	Band Edge Emission	PASS	
15.203	Antenna Requirement	PASS	

Remark:
1. "N/A" denotes test is not applicable in this Test Report.
2. All test items were verified and recorded according to the standards and without any deviation during the test.

3 FACILITIES AND ACCREDITATIONS

3.1 FACILITIES

All measurement facilities used to collect the measurement data are located at
1/F, Building E, Fenda Science Park, Sanwei Community, Xixiang Street, Bao'an District, Shenzhen 518126 P.R. China.
The sites are constructed in conformance with the requirements of ANSI C63.7, ANSI C63.10 and CISPR Publication 22.

3.2 LABORATORY ACCREDITATIONS AND LISTINGS

Site Description

EMC Lab.	:	Accredited by CNAS, 2014.09.04 The Laboratory has been assessed and proved to be in compliance with CNAS-CL01:2006 (identical to ISO/IEC 17025:2005) The Certificate Registration Number is L5516. Accredited by Industry Canada, August 29, 2012 The Certificate Registration Number is 9270A-1. Accredited by FCC, September 6, 2013 The Certificate Registration Number is 238937.
Name of Firm	:	Shenzhen NTEK Testing Technology Co., Ltd
Site Location	:	1/F, Building E, Fenda Science Park, Sanwei Community, Xixiang Street, Bao'an District, Shenzhen 518126 P.R. China.

2.3 MEASUREMENT UNCERTAINTY

The reported uncertainty of measurement y±U, where expended uncertainty U is based on a standard uncertainty multiplied by a coverage factor of k=2, providing a level of confidence of approximately 95 %.

No.	Item	Uncertainty
1	Conducted Emission Test	±2.80dB
2	RF power, conducted	±0.16dB
3	Spurious emissions, conducted	±0.21dB
4	All emissions, radiated(30MHz~1GHz)	±2.64dB
5	All emissions, radiated(1GHz~6GHz)	±2.40dB
6	All emissions, radiated(＞6GHz)	±2.52dB
7	Temperature	±0.5°C
8	Humidity	±2%

4 GENERAL DESCRIPTION OF EUT

Product Feature and Specification	
Equipment	PMA
Trade Mark	N/A
FCC ID	2ASEF-PMA10
Model No.	PMA1.0
Serial Model	N/A
Model Difference	N/A
Operating Frequency	2412-2462MHz for 802.11b/g/11n(HT20); 2422-2452 MHz for 802.11n(HT40)
Modulation	DSSS with DBPSK/DQPSK/CCK for 802.11b; OFDM with BPSK/QPSK/16QAM/64QAM for 802.11g/n;
Number of Channels	11 channels for 802.11b/g/11n(HT20); 7 channels for 802.11n(HT40);
Antenna Type	The EUT has two types of antenna(See page 8) Main Antenna A: FPC Antenna AUX Antenna B: FPC Antenna
Smart system	☒SISO for 802.11b/g ☒ MIMO for 802.11n20/n40
Antenna Gain	Antenna A: 4.34dBi Antenna B: 4.34dBi
Power supply	☒DC supply: DC 12V from Adapter
	☒Adapter supply: Model: CYSF20-120200U Input: AC 100~240V 50/60Hz 0.6A Output: DC 12V, 2A
HW Version	PMA-MD-V0.5
SW Version	R100B100D009C00

Note: Based on the application, features, or specification exhibited in User's Manual, the EUT is considered as an ITE/Computing Device. More details of EUT technical specification, please refer to the User's Manual.

Revision History

Report No.	Version	Description	Issued Date
S18112901801001	Rev.01	Initial issue of report	Jan. 06, 2019

5 DESCRIPTION OF TEST MODES

To investigate the maximum EMI emission characteristics generates from EUT, the test system was pre-scanning tested base on the consideration of following EUT operation mode or test configuration mode which possible have effect on EMI emission level. Each of these EUT operation mode(s) or test configuration mode(s) mentioned above was evaluated respectively.
The Transmitter was operated in the normal operating mode. The TX frequency was fixed which was for the purpose of the measurements.

Test of channel included the lowest and middle and highest frequency to perform the test, then record on this report.

Those data rates (802.11b: 1 Mbps; 802.11g: 6 Mbps; 802.11n (HT20): MCS0); 802.11n (HT40): MCS0) were used for all test.
The EUT was pretested with 3 orientations placed on the table for the radiated emission measurement –X, Y, and Z-plane. The Y-plane results were found as the worst case and were shown in this report.

Frequency and Channel list for 802.11b/g/n (HT20/HT40):

Channel	Frequency(MHz)
1	2412
2	2417
…	…
5	2432
6	2437
…	…
10	2457
11	2462

Note: fc=2412MHz+(k-1)×5MHz k=1 to 11

AC power line Conducted Emission was tested under maximum output power.

The EUT has two of antenna. The wireless module is 1x1 Wi-Fi support 802.11b / g / n; The 802.11 n support MIMO.

Tx Antenna

Antenna	Antenna Type	Antenna Gain(dBi)
		2.4G
A(main)	FPCB	4.34
B(aux)	FPCB	4.34

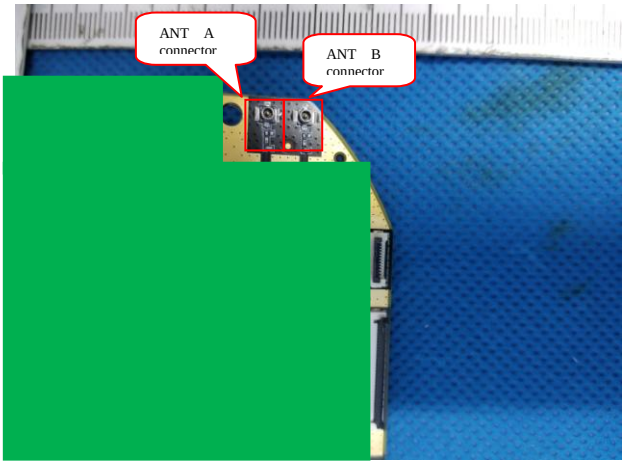

Test Mode:

Test Items	Mode	Data Rate	Channel	Ant
AC Power Line Conducted Emissions	Normal Link	-	-	-
Maximum Conducted Output Power	11b/CCK	1 Mbps	1/6/11	A/B
	11g/BPSK	6 Mbps	1/6/11	A/B
	11n HT20	MCS0	1/6/11	A/B
	11n HT40	MCS0	3/6/9	A/B
Power Spectral Density				
	11b/CCK	1 Mbps	1/6/11	A/B
	11g/BPSK	6 Mbps	1/6/11	A/B
	11n HT20	MCS0	1/6/11	A/B
	11n HT40	MCS0	3/6/9	A/B
6dB Spectrum Bandwidth				
	11b/CCK	1 Mbps	1/6/11	A/B
	11g/BPSK	6 Mbps	1/6/11	A/B
	11n HT20	MCS0	1/6/11	A/B
	11n HT40	MCS0	3/6/9	A/B
Radiated Emissions Below 1GHz	Normal Link	-	-	-
Radiated Emissions Above 1GHz				
	11b/CCK	1 Mbps	1/6/11	A/B
	11g/BPSK	6 Mbps	1/6/11	A/B
	11n HT20	MCS0	1/6/11	A/B
	11n HT40	MCS0	3/6/9	A/B
Band Edge Emissions				
	11b/CCK	1 Mbps	1/6/11	A/B
	11g/BPSK	6 Mbps	1/6/11	A/B
	11n HT20	MCS0	1/6/11	A/B
	11n HT40	MCS0	3/6/9	A/B

6 SETUP OF EQUIPMENT UNDER TEST

6.1 BLOCK DIAGRAM CONFIGURATION OF TEST SYSTEM

For AC Conducted Emission Mode

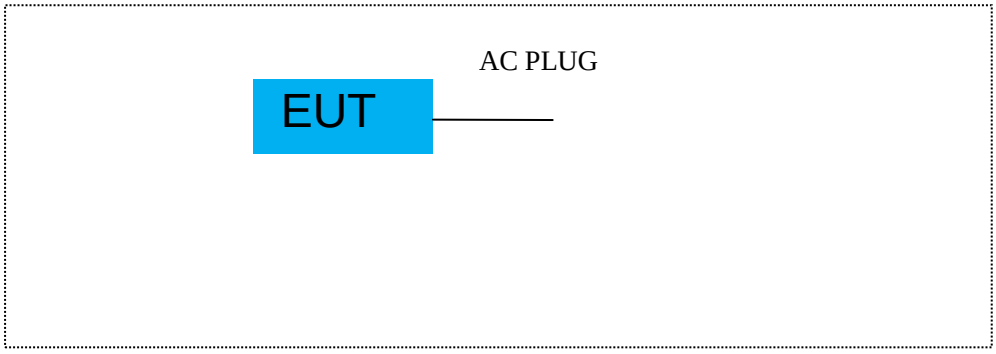

For Radiated Test Cases

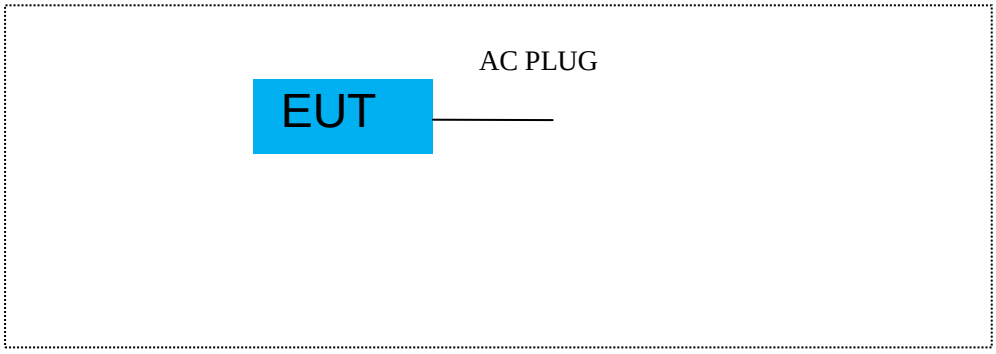

For Conducted Test Cases

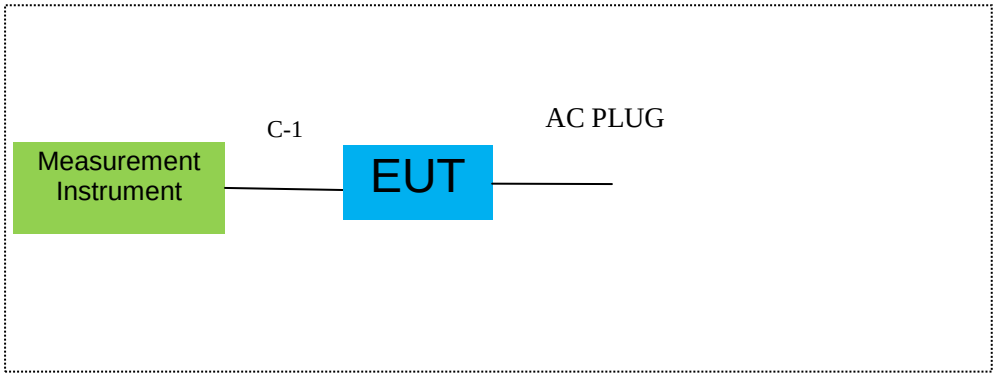

Note:The temporary antenna connector is soldered on the FPCB board in order to perform conducted tests and this temporary antenna connector is listed in the equipment list.

6.2 SUPPORT EQUIPMENT

The EUT has been tested as an independent unit together with other necessary accessories or support units. The following support units or accessories were used to form a representative test configuration during the tests.

Item	Equipment	Mfr/Brand	Model/Type No.	Series No.	Note

Item	Cable Type	Shielded Type	Ferrite Core	Length
C-1	RF Cable	YES	NO	0.1m

Notes:

(1) The support equipment was authorized by Declaration of Confirmation.
(2) For detachable type I/O cable should be specified the length in cm in『Length』column.
(3) “YES” is means “shielded” “with core”; “NO” is means “unshielded” “without core”.

6.3 EQUIPMENTS LIST FOR ALL TEST ITEMS

Radiation Test equipment

Item	Kind of Equipment	Manufacturer	Type No.	Serial No.	Last calibration	Calibrated until	Calibration period
1	Spectrum Analyzer	Aglient	E4407B	MY45108040	2018.05.19	2019.05.18	1 year
2	Spectrum Analyzer	Agilent	N9020A	MY49100060	2018.10.08	2019.10.07	1 year
3	Spectrum Analyzer	R&S	FSV40	101417	2018.10.08	2019.10.07	1 year
4	Test Receiver	R&S	ESPI7	101318	2018.05.19	2019.05.18	1 year
5	Bilog Antenna	TESEQ	CBL6111D	31216	2018.04.08	2019.04.07	1 year
6	50Ω Coaxial Switch	Anritsu	MP59B	6200983705	2018.05.19	2020.05.18	2 year
7	Horn Antenna	EM	EM-AH-10180	2011071402	2018.04.08	2019.04.07	1 year
8	Amplifier	EMC	EMC051835SE	980246	2018.08.05	2019.08.04	1 year
9	Active Loop Antenna	SCHWARZBECK	FMZB 1519 B	055	2018.11.03	2019.11.02	1 year
10	Power Meter	DARE	RPR3006W	15I00041SNO84	2018.08.05	2019.08.04	1 year
11	Test Cable (9KHz-30MHz)	N/A	R-01	N/A	2017.04.21	2020.04.20	3 year
12	Test Cable (30MHz-1GHz)	N/A	R-02	N/A	2017.04.21	2020.04.20	3 year
13	High Test Cable(1G-40GHz)	N/A	R-03	N/A	2017.04.21	2020.04.20	3 year
14	High Test Cable(1G-40GHz)	N/A	R-04	N/A	2017.04.21	2020.04.20	3 year
15	Filter	TRILTHIC	2400MHz	29	2017.04.19	2020.04.18	3 year
16	temporary antenna connector (Note)	NTS	R001	N/A	N/A	N/A	N/A

Note:

We will use the temporary antenna connector (soldered on the FPCB board) When conducted test
And this temporary antenna connector is listed within the instrument list

AC Conduction Test equipment

Item	Kind of Equipment	Manufacturer	Type No.	Serial No.	Last calibration	Calibrated until	Calibration period
1	Test Receiver	R&S	ESCI	101160	2018.05.19	2019.05.18	1 year
2	LISN	R&S	ENV216	101313	2018.04.18	2019.04.19	1 year
3	LISN	SCHWARZBECK	NNLK 8129	8129245	2018.05.19	2019.05.18	1 year
4	50Ω Coaxial Switch	ANRITSU CORP	MP59B	6200983704	2018.05.19	2020.05.18	2 year
5	Test Cable (9KHz-30MHz)	N/A	C01	N/A	2017.04.21	2020.04.20	3 year
6	Test Cable (9KHz-30MHz)	N/A	C02	N/A	2017.04.21	2020.04.20	3 year
7	Test Cable (9KHz-30MHz)	N/A	C03	N/A	2017.04.21	2020.04.20	3 year

Note: Each piece of equipment is scheduled for calibration once a year except the Test Cable which is scheduled for calibration every 3 years.

7 TEST REQUIREMENTS

7.1 CONDUCTED EMISSIONS TEST

7.1.1 Applicable Standard

According to FCC Part 15.207(a) and KDB 174176 D01 Line Conducted FAQ v01r01

7.1.2 Conformance Limit

Frequency(MHz)	Conducted Emission Limit	
	Quasi-peak	Average
0.15-0.5	66-56*	56-46*
0.5-5.0	56	46
5.0-30.0	60	50

Note: 1. *Decreases with the logarithm of the frequency
2. The lower limit shall apply at the transition frequencies
3. The limit decreases in line with the logarithm of the frequency in the range of 0.15 to 0.50MHz.

7.1.3 Measuring Instruments

The Measuring equipment is listed in the section 6.3 of this test report.

7.1.4 Test Configuration

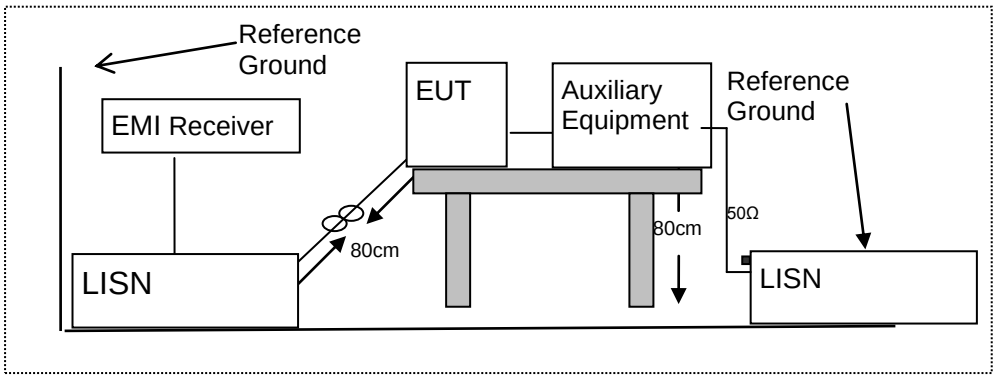

7.1.5 Test Procedure

According to the requirements in Section 13.1.4.1 of ANSI C63.10-2013 Conducted emissions the EUT measured in the frequency range between 0.15 MHz and 30 MHz using CISPR Quasi-Peak and average detector mode.

1. The EUT was placed 0.4 meter from the conducting wall of the shielding room.
2. The EUT was placed on a table which is 0.8m above ground plane.
3. Connect EUT to the power mains through a line impedance stabilization network (LISN). All other support equipments powered from additional LISN(s). The LISN provide 50 Ohm/ 50uH of coupling impedance for the measuring instrument.
4. Interconnecting cables that hang closer than 40 cm to the ground plane shall be folded back and forth in the center forming a bundle 30 to 40cm long.
5. I/O cables that are not connected to a peripheral shall be bundled in the center. The end of the cable may be terminated, if required, using the correct terminating impedance. The overall length shall not exceed 1 m.
6. LISN at least 80 cm from nearest part of EUT chassis.
7. The frequency range from 150KHz to 30MHz was searched.
8. Set the test-receiver system to Peak Detect Function and specified bandwidth(IF bandwidth=9KHz) with Maximum Hold Mode
9. For the actual test configuration, please refer to the related Item –EUT Test Photos.

7.1.6 Test Results

EUT:	PMA	Model Name :	PMA1.0
Temperature:	26 ℃	Relative Humidity:	54%
Pressure:	1010hPa	Phase :	L
Test Voltage :	DC 12V from Adapter AC 120V/60Hz	Test Mode:	Normal Link

Frequency (MHz)	Reading Level (dBμV)	Correct Factor (dB)	Measure-ment (dBμV)	Limits (dBμV)	Margin (dB)	Remark
0.1500	30.67	9.75	40.42	56.00	-15.58	AVG
0.1524	44.98	9.75	54.73	65.86	-11.13	QP
0.1623	28.99	9.76	38.75	55.34	-16.59	AVG
0.1660	43.27	9.76	53.03	65.15	-12.12	QP
0.2340	37.69	9.76	47.45	62.30	-14.85	QP
0.2340	22.52	9.76	32.28	52.30	-20.02	AVG
0.4500	31.89	9.74	41.63	56.87	-15.24	QP
0.4620	20.39	9.74	30.13	46.66	-16.53	AVG
0.5699	22.04	9.74	31.78	46.00	-14.22	AVG
0.5859	29.51	9.74	39.25	56.00	-16.75	QP
2.2139	28.94	9.78	38.72	56.00	-17.28	QP
2.2139	17.65	9.78	27.43	46.00	-18.57	AVG

Remark:

1. All readings are Quasi-Peak and Average values.
2. Factor = Insertion Loss + Cable Loss.

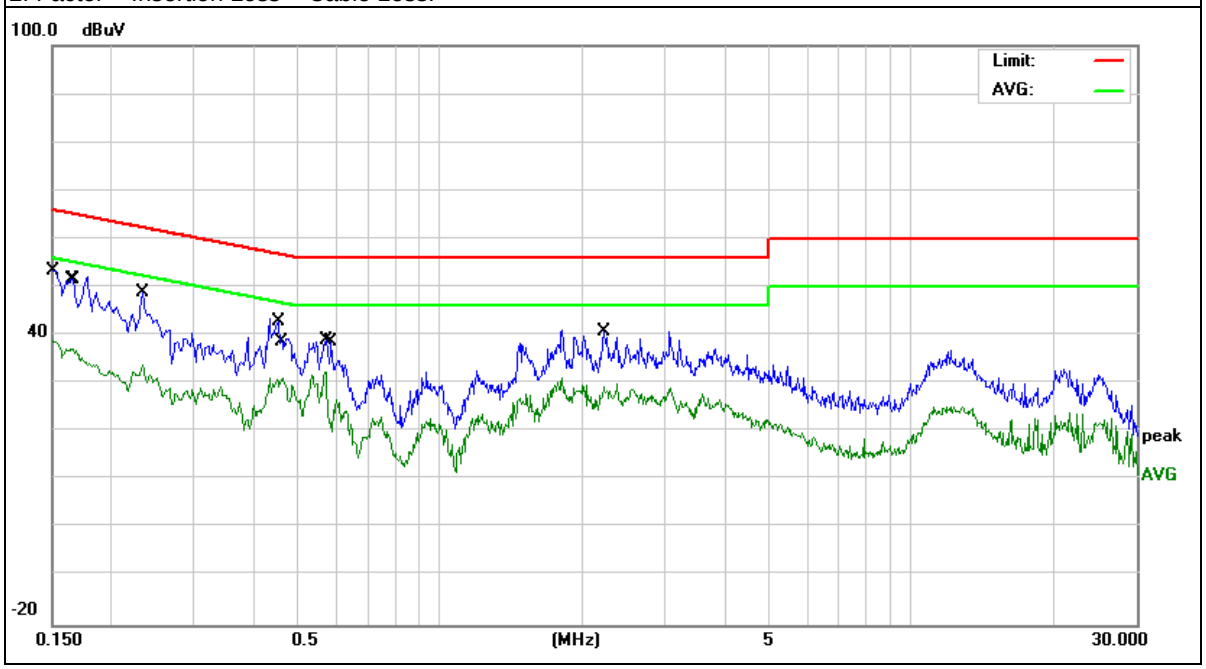

EUT:	PMA	Model Name :	PMA1.0
Temperature:	26 ℃	Relative Humidity:	54%
Pressure:	1010hPa	Phase :	N
Test Voltage :	DC 12V from Adapter AC 120V/60Hz	Test Mode:	Normal Link

Frequency (MHz)	Reading Level (dBμV)	Correct Factor (dB)	Measure-ment (dBμV)	Limits (dBμV)	Margin (dB)	Remark
0.1590	41.88	9.74	51.62	65.51	-13.89	QP
0.1620	27.74	9.73	37.47	55.36	-17.89	AVG
0.2660	35.32	9.74	45.06	61.24	-16.18	QP
0.2660	21.14	9.74	30.88	51.24	-20.36	AVG
1.9499	27.78	9.79	37.57	56.00	-18.43	QP
1.9499	16.77	9.79	26.56	46.00	-19.44	AVG
2.7419	26.98	9.84	36.82	56.00	-19.18	QP
2.7419	16.03	9.84	25.87	46.00	-20.13	AVG
3.4860	16.30	9.89	26.19	46.00	-19.81	AVG
3.4940	27.14	9.89	37.03	56.00	-18.97	QP
12.3698	27.68	10.07	37.75	60.00	-22.25	QP
12.5219	16.23	10.07	26.30	50.00	-23.70	AVG

Remark:

1. All readings are Quasi-Peak and Average values.
2. Factor = Insertion Loss + Cable Loss.

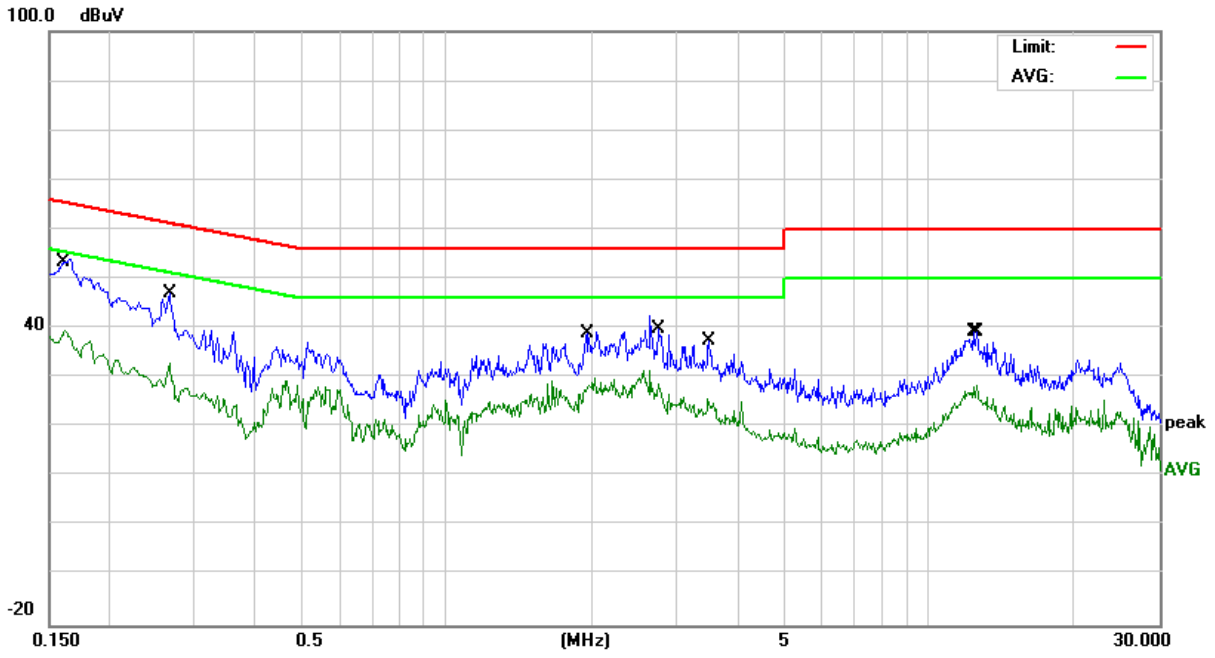

EUT：	PMA	Model Name. ：	PMA1.0
Temperature：	26 ℃	Relative Humidity：	56%
Pressure：	1010hPa	Phase :	L
Test Voltage ：	DC 12V from Adapter AC 240V/60Hz	Test Mode：	Mode 1

Frequency (MHz)	Reading Level (dBμV)	Correct Factor (dB)	Measure-ment (dBμV)	Limits (dBμV)	Margin (dB)	Remark
0.1580	47.02	9.75	56.77	65.56	-8.79	QP
0.1580	36.40	9.75	46.15	55.56	-9.41	AVG
0.5820	23.78	9.74	33.52	46.00	-12.48	AVG
0.5899	30.89	9.74	40.63	56.00	-15.37	QP
2.6940	29.70	9.80	39.50	56.00	-16.50	QP
2.6940	18.98	9.80	28.78	46.00	-17.22	AVG
11.7180	20.88	10.04	30.92	50.00	-19.08	AVG
12.7580	28.77	10.06	38.83	60.00	-21.17	QP

Remark:

1. All readings are Quasi-Peak and Average values.
2. Factor = Insertion Loss + Cable Loss.

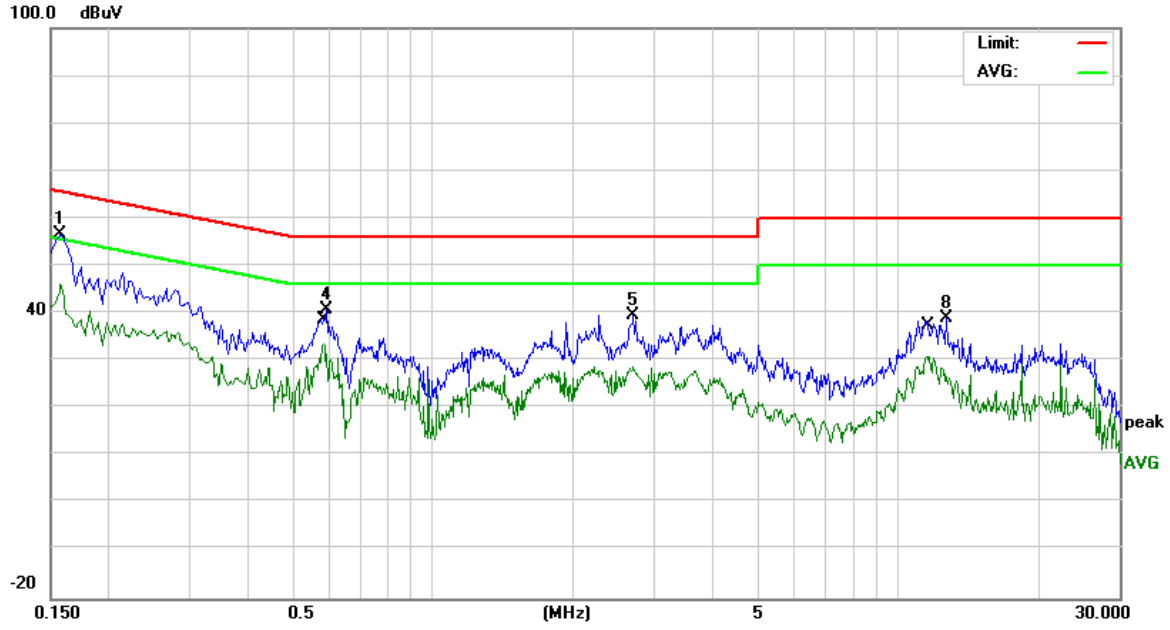

EUT:	PMA	Model Name. :	PMA1.0
Temperature:	26 ℃	Relative Humidity:	56%
Pressure:	1010hPa	Phase :	N
Test Voltage :	DC 12V from Adapter AC 240V/60Hz	Test Mode:	Mode 1

Frequency (MHz)	Reading Level (dBμV)	Correct Factor (dB)	Measure-ment (dBμV)	Limits (dBμV)	Margin (dB)	Remark
0.1539	49.58	9.74	59.32	65.78	-6.46	QP
0.1539	33.49	9.74	43.23	55.78	-12.55	AVG
0.5780	19.00	9.75	28.75	46.00	-17.25	AVG
0.7660	24.57	9.75	34.32	56.00	-21.68	QP
1.9540	19.37	9.79	29.16	46.00	-16.84	AVG
2.5300	30.39	9.82	40.21	56.00	-15.79	QP
11.5460	21.34	10.07	31.41	50.00	-18.59	AVG
12.1500	30.72	10.07	40.79	60.00	-19.21	QP

Remark:

1. All readings are Quasi-Peak and Average values.
2. Factor = Insertion Loss + Cable Loss.

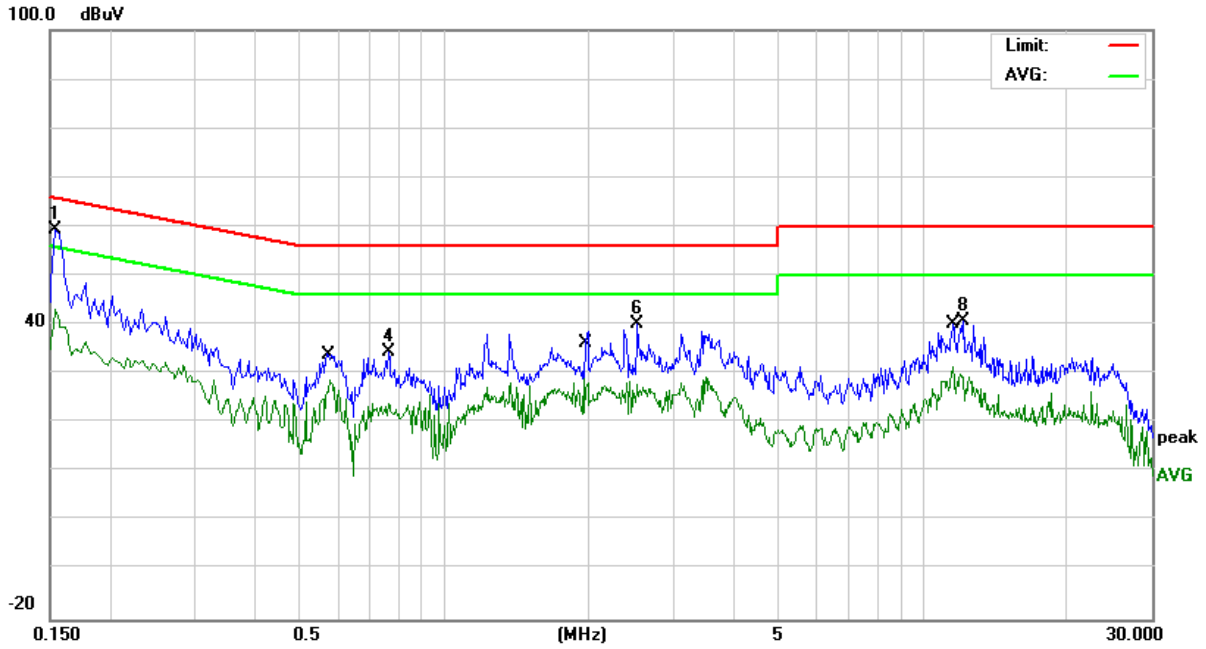

7.2 RADIATED SPURIOUS EMISSION

7.2.1 Applicable Standard

According to FCC Part 15.247(d) and 15.209 and ANSI C63.10-2013

7.2.2 Conformance Limit

According to FCC Part 15.247(d): radiated emissions which fall in the restricted bands, as defined in §15.205(a), must also comply with the radiated emission limits specified in §15.209(a) (see §15.205(c)).
According to FCC Part15.205, Restricted bands

MHz	MHz	MHz	GHz
0.090-0.110	16.42-16.423	399.9-410	4.5-5.15
10.495-0.505	16.69475-16.69525	608-614	5.35-5.46
2.1735-2.1905	16.80425-16.80475	960-1240	7.25-7.75
4.125-4.128	25.5-25.67	1300-1427	8.025-8.5
4.17725-4.17775	37.5-38.25	1435-1626.5	9.0-9.2
4.20725-4.20775	73-74.6	1645.5-1646.5	9.3-9.5
6.215-6.218	74.8-75.2	1660-1710	10.6-12.7
6.26775-6.26825	123-138	2200-2300	14.47-14.5
8.291-8.294	149.9-150.05	2310-2390	15.35-16.2
8.362-8.366	156.52475-156.52525	2483.5-2500	17.7-21.4
8.37625-8.38675	156.7-156.9	2690-2900	22.01-23.12
8.41425-8.41475	162.0125-167.17	3260-3267	23.6-24.0
12.29-12.293	167.72-173.2	3332-3339	31.2-31.8
12.51975-12.52025	240-285	3345.8-3358	36.43-36.5
12.57675-12.57725	322-335.4	3600-4400	(2)
13.36-13.41			

20dBc in any 100 kHz bandwidth outside the operating frequency band. In case the emission fall within the restricted band specified on 15.205(a), then the 15.209(a) limit in the table below has to be followed.

Restricted Frequency(MHz)	Field Strength (μV/m)	Field Strength (dBμV/m)	Measurement Distance
0.009~0.490	2400/F(KHz)	20 log (uV/m)	300
0.490~1.705	2400/F(KHz)	20 log (uV/m)	30
1.705~30.0	30	29.5	30
30-88	100	40	3
88-216	150	43.5	3
216-960	200	46	3
Above 960	500	54	3

Limits of Radiated Emission Measurement(Above 1000MHz)

Frequency(MHz)	Class B (dBuV/m) (at 3M)	
	PEAK	AVERAGE
Above 1000	74	54

Remark :1. Emission level in dBuV/m=20 log (uV/m)
2. Measurement was performed at an antenna to the closed point of EUT distance of meters.
3. For Frequency 9kHz~30MHz:
Distance extrapolation factor =40log(Specific distance/ test distance)(dB);
Limit line=Specific limits(dBuV) + distance extrapolation factor.
For Frequency above 30MHz:
Distance extrapolation factor =20log(Specific distance/ test distance)(dB);
Limit line=Specific limits(dBuV) + distance extrapolation factor.

7.2.3 Measuring Instruments

The Measuring equipment is listed in the section 6.3 of this test report.

7.2.4 Test Configuration

(a) For radiated emissions below 30MHz

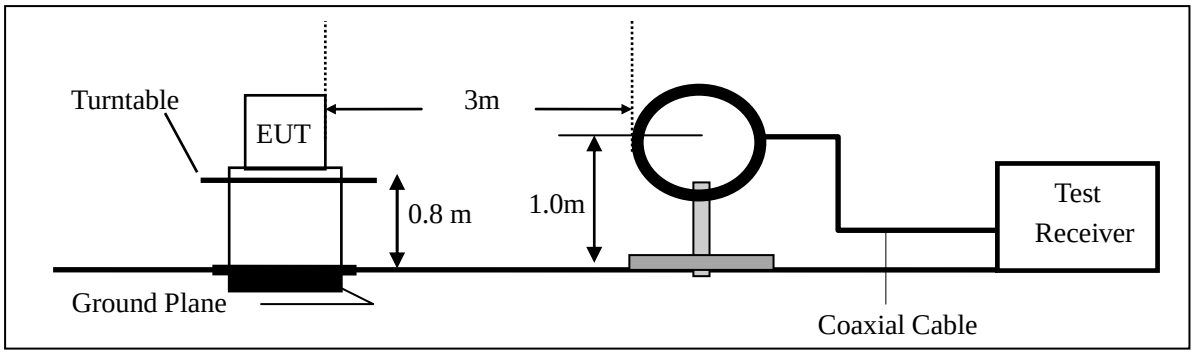

(b) For radiated emissions from 30MHz to 1000MHz

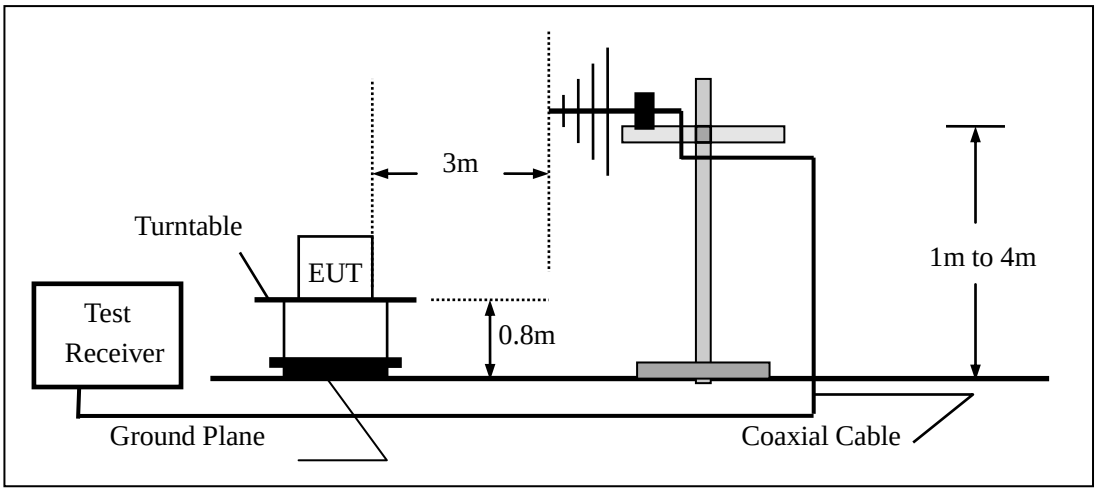

(c) For radiated emissions above 1000MHz

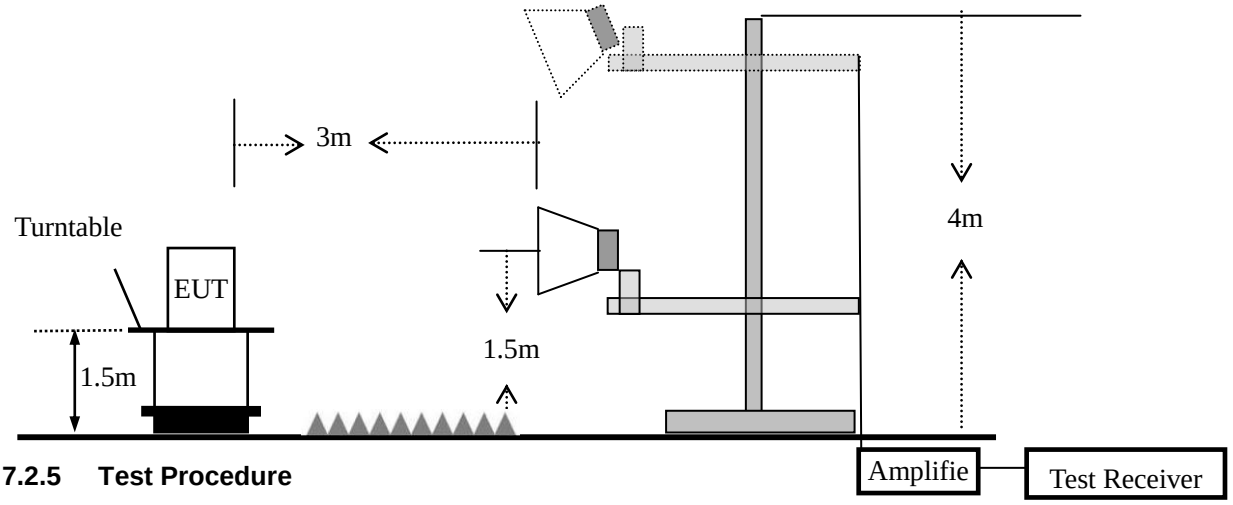

7.2.5 Test Procedure

The test site semi-anechoic chamber has met the requirement of NSA tolerance 4 dB according to the standards: ANSI C63.10-2013. The test distance is 3m.The setup is according to the requirements in Section 13.1.4.1 of ANSI C63.10-2013 and CAN/CSA-CEI/IEC CISPR 22.
This test is required for any spurious emission that falls in a Restricted Band, as defined in Section 15.205. It must be performed with the highest gain of each type of antenna proposed for use with the EUT.
Use the following spectrum analyzer settings:

Spectrum Parameter	Setting
Attenuation	Auto
Start Frequency	1000 MHz
Stop Frequency	10th carrier harmonic
RB / VB (emission in restricted band)	1 MHz / 1 MHz for Peak, 1 MHz / 10Hz for Average

Receiver Parameter	Setting
Attenuation	Auto
Start ~ Stop Frequency	9kHz~150kHz / RB 200Hz for QP
Start ~ Stop Frequency	150kHz~30MHz / RB 9kHz for QP
Start ~ Stop Frequency	30MHz~1000MHz / RB 120kHz for QP

a. The measuring distance of at 3 m shall be used for measurements at frequency up to 1GHz and frequencies above 1GHz,
b. The EUT was placed on the top of a rotating table 0.8 m for below 1GHz and 1.5m for above 1GHz the ground at a 3 meter. The table was rotated 360 degrees to determine the position of the highest radiation.
c. The height of the equipment or of the substitution antenna shall be 0.8 m for below 1GHz and 1.5m for above 1GHz; the height of the test antenna shall vary between 1 m to 4 m. Both horizontal and vertical polarizations of the antenna are set to make the measurement.
d. For the radiated emission test above 1GHz:
Place the measurement antenna away from each area of the EUT determined to be a source of emissions at the specified measurement distance, while keeping the measurement antenna aimed at the source of emissions at each frequency of significant emissions, with polarization oriented for maximum response. The measurement antenna may have to be higher or lower than the EUT, depending on the radiation pattern of the emission and staying aimed at the emission source for receiving the maximum signal. The final measurement antenna elevation shall be that which maximizes the emissions. The measurement antenna elevation for maximum emissions shall be restricted to a range of heights of from 1 m to 4 m above the ground or reference ground plane.

e. The initial step in collecting conducted emission data is a spectrum analyzer peak detector mode pre-scanning the measurement frequency range. Significant peaks are then marked and then Quasi Peak detector mode re-measured.

f. If the Peak Mode measured value compliance with and lower than Quasi Peak Mode Limit, the EUT shall be deemed to meet QP Limits and then no additional QP Mode measurement performed.

g For the actual test configuration, please refer to the related Item –EUT Test Photos.

Note:

Both horizontal and vertical antenna polarities were tested
and performed pretest to three orthogonal axis. The worst case emissions were reported

During the radiated emission test, the Spectrum Analyzer was set with the following configurations:
For peak measurement:
Set RBW=100 kHz for f < 1 GHz; VBW⩾RBW; Sweep = auto; Detector function = peak; Trace = max hold;
Set RBW = 1 MHz, VBW= 3MHz for f⩾1 GHz
For average measurement:
VBW = 10 Hz, when duty cycle is no less than 98 percent.
VBW ⩾ 1/T, when duty cycle is less than 98 percent where T is the minimum transmission duration over which the transmitter is on and is transmitting at its maximum power control level for the tested mode of operation.

Note: for the frequency ranges below 30 MHz, a narrower RBW is used for these ranges but the measured value should add a RBW correction factor (RBWCF) where RBWCF [dB] =10*lg(100 [kHz]/narrower RBW [kHz]). , the narrower RBW is 1 kHz and RBWCF is 20 dB for the frequency 9 kHz to 150 kHz, and the narrower RBW is 10 kHz and RBWCF is 10 dB for the frequency 150 kHz to 30 MHz.

7.2.6 Test Results

■ Spurious Emission below 30MHz (9KHz to 30MHz)

EUT:	PMA	Model No.:	PMA1.0
Temperature:	20 ℃	Relative Humidity:	48%
Test Mode:	Mode2/Mode3/Mode4/Mode5	Test By:	Loren Luo

Freq. (MHz)	Ant.Pol. H/V	Emission Level(dBuV/m)		Limit 3m(dBuV/m)		Over(dB)	
		PK	AV	PK	AV	PK	AV
--	--	--	--	--	--	--	--

Note: the amplitude of spurious emission that is attenuated by more than 20dB below the permissible limit has no need to be reported.

■ Spurious Emission below 1GHz (30MHz to 1GHz)
All the modulation modes have been tested, and the worst result was report as below:

EUT:	PMA	Model Name :	PMA1.0
Temperature:	20 ℃	Relative Humidity:	48%
Pressure:	1010hPa	Test Mode:	Normal Link
Test Voltage :	DC 12V from Adapter AC 120V/60Hz		

Polar (H/V)	Frequency (MHz)	Meter Reading (dBuV)	Factor (dB)	Emission Level (dBuV/m)	Limits (dBuV/m)	Margin (dB)	Remark
V	143.8295	25.98	13.18	39.16	43.50	-4.34	QP
V	152.1297	23.89	12.66	36.55	43.50	-6.95	QP
V	360.4476	21.81	17.87	39.68	46.00	-6.32	QP
V	528.2458	20.22	22.34	42.56	46.00	-3.44	QP
V	597.2234	20.23	23.76	43.99	46.00	-2.01	QP

Remark:
Absolute Level= Reading Level+ Factor, Margin= Absolute Level - Limit

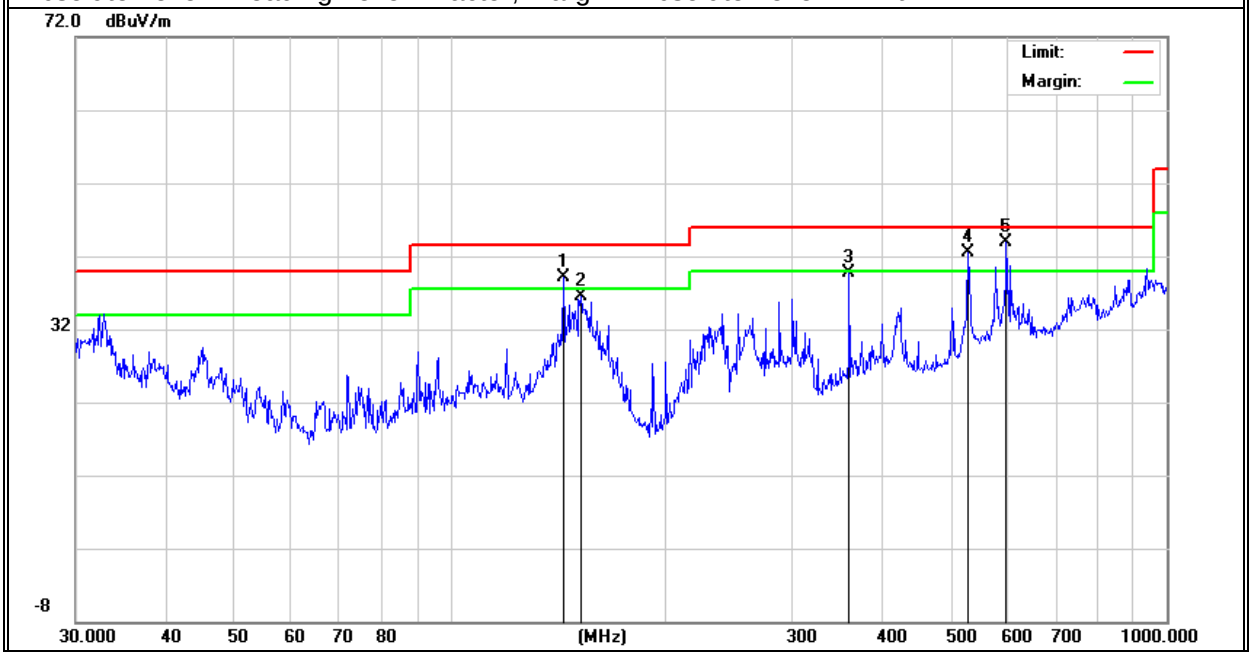

Polar (H/V)	Frequency (MHz)	Meter Reading (dBuV)	Factor (dB)	Emission Level (dBuV/m)	Limits (dBuV/m)	Margin (dB)	Remark
H	96.0986	16.61	11.08	27.69	43.50	-15.81	QP
H	143.8295	22.99	13.18	36.17	43.50	-7.33	QP
H	216.0240	23.53	11.10	34.63	46.00	-11.37	QP
H	300.3673	18.07	16.09	34.16	46.00	-11.84	QP
H	400.4318	16.99	19.64	36.63	46.00	-9.37	QP
H	528.2458	16.53	22.34	38.87	46.00	-7.13	QP

Remark:
Absolute Level= Reading Level+ Factor, Margin= Absolute Level - Limit

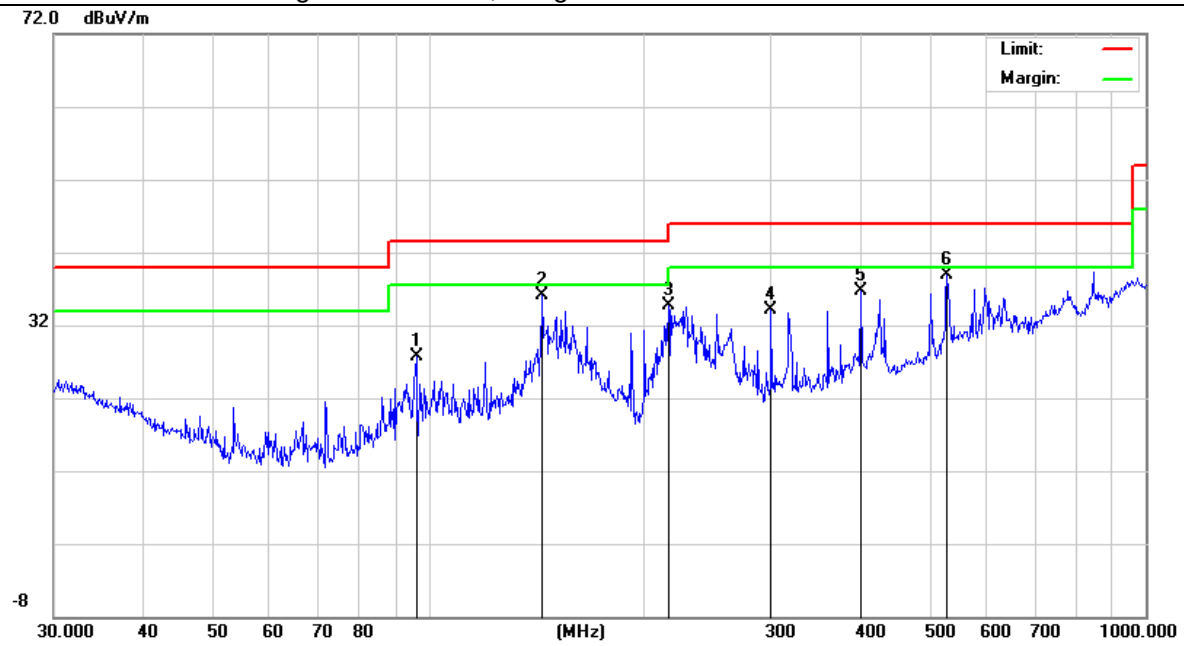

■ Spurious Emission Above 1GHz (1GHz to 25GHz)

EUT:	PMA	Model No.:	PMA1.0
Temperature:	20 ℃	Relative Humidity:	48%
Test Mode:	802.11b/g/n20/n40	Test By:	Loren Luo

All the modulation modes have been tested, EUT has two antenna A and B, the worst data is Antenna B, only shown Antenna B data below:

Frequency	Read Level	Cable loss	Antenna Factor	Preamp Factor	Emission Level	Limits	Margin	Remark	Comment
(MHz)	(dBμV)	(dB)	dB/m	(dB)	(dBμV/m)	(dBμV/m)	(dB)		
Low Channel (2412 MHz)(802.11b)--Above 1G									
4824.52	57.93	5.21	35.59	44.30	54.31	74	-19.69	Pk	Vertical
4824.52	43.00	5.21	35.59	44.30	39.38	54	-14.62	AV	Vertical
7236.61	51.04	6.48	36.27	44.60	49.07	74	-24.93	Pk	Vertical
7236.61	42.88	6.48	36.27	44.60	40.91	54	-13.09	AV	Vertical
4824.94	50.84	5.21	35.55	44.30	47.18	74	-26.82	Pk	Horizontal
4824.94	40.37	5.21	35.55	44.30	36.71	54	-17.29	AV	Horizontal
7237.08	53.21	6.48	36.27	44.52	51.32	74	-22.68	Pk	Horizontal
7237.08	43.54	6.48	36.27	44.52	41.65	54	-12.35	AV	Horizontal
Middle Channel (2437 MHz)(802.11b)--Above 1G									
4875.05	55.69	5.21	35.66	44.20	52.24	74	-21.76	Pk	Vertical
4875.05	43.56	5.21	35.66	44.20	40.11	54	-13.89	AV	Vertical
7312.04	54.99	7.10	36.50	44.43	54.04	74	-19.96	Pk	Vertical
7312.04	43.32	7.10	36.50	44.43	42.37	54	-11.63	AV	Vertical
4874.29	54.78	5.21	35.66	44.20	51.33	74	-22.67	Pk	Horizontal
4874.29	40.98	5.21	35.66	44.20	37.53	54	-16.47	AV	Horizontal
7311.65	49.45	7.10	36.50	44.43	48.50	74	-25.50	Pk	Horizontal
7311.65	41.78	7.10	36.50	44.43	40.83	54	-13.17	AV	Horizontal
High Channel (2462 MHz)(802.11b)--Above 1G									
4926.07	58.65	5.21	35.52	44.21	55.05	74	-18.95	Pk	Vertical
4926.07	43.49	5.21	35.52	44.21	39.89	54	-14.11	AV	Vertical
7386.17	51.80	7.10	36.53	44.60	50.71	74	-23.29	Pk	Vertical
7386.17	42.52	7.10	36.53	44.60	41.43	54	-12.57	AV	Vertical
4924.65	53.92	5.21	35.52	44.21	50.32	74	-23.68	Pk	Horizontal
4924.65	44.00	5.21	35.52	44.21	40.40	54	-13.60	AV	Horizontal
7386.53	50.56	7.10	36.53	44.60	49.47	74	-24.53	Pk	Horizontal
7386.53	43.21	7.10	36.53	44.60	42.12	54	-11.88	AV	Horizontal

Note: (1) Emission Level= Antenna Factor + Cable Loss + Read Level - Preamp Factor
(2) Data of measurement within this frequency range shown " -- " in the table above means the reading of emissions are attenuated more than 20dB below the permissible limits or the field strength is too small to be measured.
(3) "802.11b" mode is the worst mode. When PK value is lower than the Average value limit, average don't record.

■ Spurious Emission in Restricted Band 2310MHz -18000MHz

All the modulation modes have been tested, EUT has two antenna A and B, the worst data is Antenna B, only shown Antenna B data below:

Frequency (MHz)	Meter Reading (dBμV)	Cable Loss (dB)	Antenna Factor dB/m	Preamp Factor (dB)	Emission Level (dBμV/m)	Limits (dBμV/m)	Margin (dB)	Detector Type	Comment
802.11b									
2310.00	53.44	2.97	27.80	43.80	40.72	74	-33.28	Pk	Horizontal
2310.00	41.60	2.97	27.80	43.80	28.88	54	-25.12	AV	Horizontal
2310.00	51.02	2.97	27.80	43.80	38.30	74	-35.70	Pk	Vertical
2310.00	43.94	2.97	27.80	43.80	31.22	54	-22.78	AV	Vertical
2390.00	52.68	3.14	27.21	43.80	39.54	74	-34.46	Pk	Vertical
2390.00	43.24	3.14	27.21	43.80	30.10	54	-23.90	AV	Vertical
2390.00	51.14	3.14	27.21	43.80	38.00	74	-36.00	Pk	Horizontal
2390.00	42.35	3.14	27.21	43.80	29.21	54	-24.79	AV	Horizontal
2483.50	50.40	3.58	27.70	44.00	37.99	74	-36.01	Pk	Vertical
2483.50	41.02	3.58	27.70	44.00	28.61	54	-25.39	AV	Vertical
2483.50	51.58	3.58	27.70	44.00	39.17	74	-34.83	Pk	Horizontal
2483.50	43.18	3.58	27.70	44.00	30.77	54	-23.23	AV	Horizontal
802.11g									
2310	53.99	2.97	27.80	43.80	41.27	74	-32.73	Pk	Horizontal
2310	43.08	2.97	27.80	43.80	30.36	54	-23.64	AV	Horizontal
2310	54.37	2.97	27.80	43.80	41.65	74	-32.35	Pk	Vertical
2310	44.45	2.97	27.80	43.80	31.73	54	-22.27	AV	Vertical
2390	49.97	3.14	27.21	43.80	36.83	74	-37.17	Pk	Vertical
2390	41.17	3.14	27.21	43.80	28.03	54	-25.97	AV	Vertical
2390	53.56	3.14	27.21	43.80	40.42	74	-33.58	Pk	Horizontal
2390	44.18	3.14	27.21	43.80	31.04	54	-22.96	AV	Horizontal
2483.5	51.09	3.58	27.70	44.00	38.68	74	-35.32	Pk	Vertical
2483.5	43.00	3.58	27.70	44.00	30.59	54	-23.41	AV	Vertical
2483.5	51.08	3.58	27.70	44.00	38.67	74	-35.33	Pk	Horizontal
2483.5	43.49	3.58	27.70	44.00	31.08	54	-22.92	AV	Horizontal
802.11n20									
2310	54.08	2.97	27.80	43.80	41.36	74	-32.64	Pk	Horizontal
2310	41.65	2.97	27.80	43.80	28.93	54	-25.07	AV	Horizontal
2310	52.00	2.97	27.80	43.80	39.28	74	-34.72	Pk	Vertical
2310	41.10	2.97	27.80	43.80	28.38	54	-25.62	AV	Vertical
2390	53.86	3.14	27.21	43.80	40.72	74	-33.28	Pk	Vertical
2390	43.36	3.14	27.21	43.80	30.22	54	-23.78	AV	Vertical
2390	50.98	3.14	27.21	43.80	37.84	74	-36.16	Pk	Horizontal
2390	43.39	3.14	27.21	43.80	30.25	54	-23.75	AV	Horizontal
2483.5	53.45	3.58	27.70	44.00	41.04	74	-32.96	Pk	Vertical
2483.5	41.52	3.58	27.70	44.00	29.11	54	-24.89	AV	Vertical
2483.5	54.59	3.58	27.70	44.00	42.18	74	-31.82	Pk	Horizontal
2483.5	40.04	3.58	27.70	44.00	27.63	54	-26.37	AV	Horizontal
802.11n40									
2310	50.67	2.97	27.80	43.80	37.95	74	-36.05	Pk	Horizontal
2310	40.70	2.97	27.80	43.80	27.98	54	-26.02	AV	Horizontal
2310	49.86	2.97	27.80	43.80	37.14	74	-36.86	Pk	Vertical
2310	43.75	2.97	27.80	43.80	31.03	54	-22.97	AV	Vertical
2390	53.59	3.14	27.21	43.80	40.45	74	-33.55	Pk	Vertical
2390	41.85	3.14	27.21	43.80	28.71	54	-25.29	AV	Vertical
2390	53.36	3.14	27.21	43.80	40.22	74	-33.78	Pk	Horizontal
2390	41.84	3.14	27.21	43.80	28.70	54	-25.30	AV	Horizontal
2483.5	50.92	3.58	27.70	44.00	38.51	74	-35.49	Pk	Vertical
2483.5	43.22	3.58	27.70	44.00	30.81	54	-23.19	AV	Vertical
2483.5	51.87	3.58	27.70	44.00	39.46	74	-34.54	Pk	Horizontal
2483.5	42.64	3.58	27.70	44.00	30.23	54	-23.77	AV	Horizontal

Spurious Emission in Restricted Bands 3260MHz- 18000MHz

All the modulation modes have been tested, EUT has two antenna A and B, the worst data is Antenna B, only shown Antenna B data as below:

Frequency	Reading Level	Cable Loss	Antenna Factor	Preamp Factor	Emission Level	Limits	Margin	Detector	Comment
(MHz)	(dBμV)	(dB)	dB/m	(dB)	(dBμV/m)	(dBμV/m)	(dB)	Type	
3260	65.17	4.04	29.57	44.70	54.08	74	-19.92	Pk	Vertical
3260	54.00	4.04	29.57	44.70	42.91	54	-11.09	AV	Vertical
3260	62.73	4.04	29.57	44.70	51.64	74	-22.36	Pk	Horizontal
3260	51.16	4.04	29.57	44.70	40.07	54	-13.93	AV	Horizontal
3332	62.19	4.26	29.87	44.40	51.92	74	-22.08	Pk	Vertical
3332	51.47	4.26	29.87	44.40	41.20	54	-12.80	AV	Vertical
3332	62.54	4.26	29.87	44.40	52.27	74	-21.73	Pk	Horizontal
3332	52.93	4.26	29.87	44.40	42.66	54	-11.34	AV	Horizontal
17797	45.54	10.99	43.95	43.50	56.98	74	-17.02	Pk	Vertical
17797	31.05	10.99	43.95	43.50	42.49	54	-11.51	AV	Vertical
17788	45.91	11.81	43.69	44.60	56.81	74	-17.19	Pk	Horizontal
17788	32.74	11.81	43.69	44.60	43.64	54	-10.36	AV	Horizontal

“802.11 b” mode is the worst mode. When PK value is lower than the Average value limit, average don't record.

7.3 6DB BANDWIDTH

7.3.1 Applicable Standard

According to FCC Part 15.247(a)(2) and KDB 558074 D01 15.247 Meas Guidance v05 Section 8.2.

7.3.2 Conformance Limit

The minimum permissible 6dB bandwidth is 500 kHz.

7.3.3 Measuring Instruments

The Measuring equipment is listed in the section 6.3 of this test report.

7.3.4 Test Setup

Please refer to Section 6.1 of this test report.

7.3.5 Test Procedure

The testing follows Subclause 11.8 of ANSI C63.10.
The RF output of EUT was connected to the spectrum analyzer by RF cable and attenuator.
The path loss was compensated to the results for each measurement.
Set to the maximum power setting and enable the EUT transmit continuously.
The EUT was operating in controlled its channel.
Use the following spectrum analyzer settings:
Span = the frequency band of operation
RBW = 100KHz
VBW ≥ 3*RBW
Sweep = auto
Detector function = peak
Trace = max hold

7.3.6 Test Results

EUT:	PMA	Model No.:	PMA1.0
Temperature:	20 ℃	Relative Humidity:	48%
Test Mode:	802.11b/g/n20/n40	Test By:	Loren Luo

Note: A(B) Represent the value of antenna A and B, The worst data is Antenna A, only shown Antenna A Plot.

Mode	Channel	Frequency (MHz)	6dB bandwidth(MHz)		Limit (kHz)	Result
			Antenna A	Antenna B		
802.11b	Low	2412	9.152	8.542	500	Pass
	Middle	2437	9.335	8.613	500	Pass
	High	2462	8.589	8.846	500	Pass
802.11g	Low	2412	16.42	16.41	500	Pass
	Middle	2437	16.41	16.40	500	Pass
	High	2462	16.40	16.40	500	Pass
802.11n20	Low	2412	17.73	17.73	500	Pass
	Middle	2437	17.73	17.75	500	Pass
	High	2462	17.72	17.74	500	Pass
802.11n40	Low	2422	36.47	36.37	500	Pass
	Middle	2437	36.48	36.48	500	Pass
	High	2452	36.50	36.44	500	Pass

Test plot

(802.11b) 6dB Bandwidth plot on channel 1

(802.11g) 6dB Bandwidth plot on channel 1

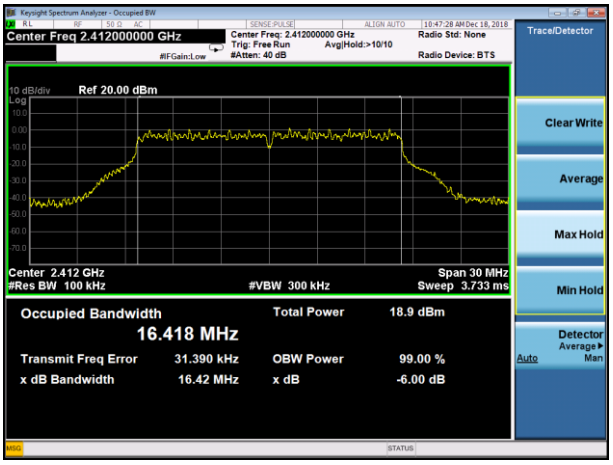

(802.11b) 6dB Bandwidth plot on channel 6

(802.11g) 6dB Bandwidth plot on channel 6

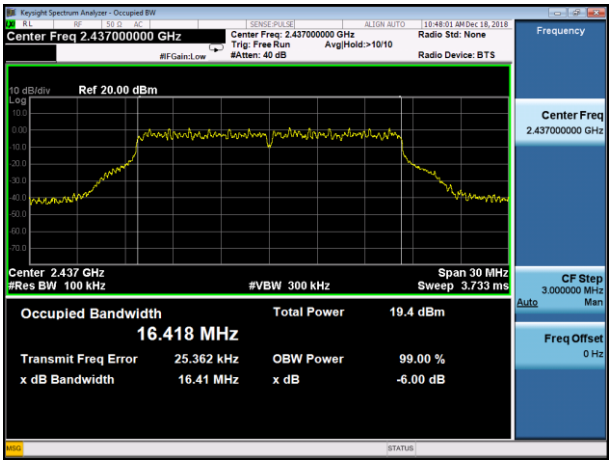

(802.11b) 6dB Bandwidth plot on channel 11

(802.11g) 6dB Bandwidth plot on channel 11

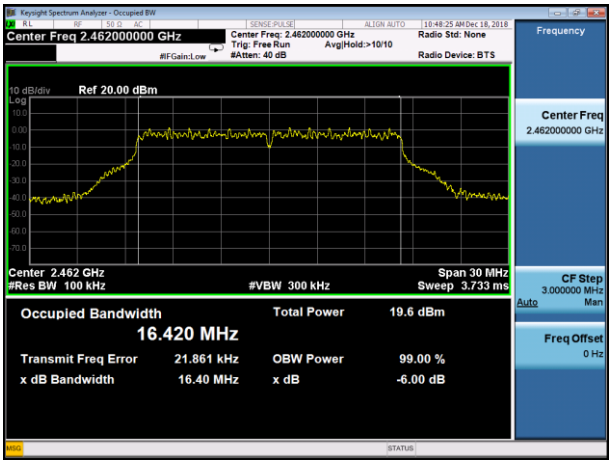

Test plot

(802.11n20) 6dB Bandwidth plot on channel 1

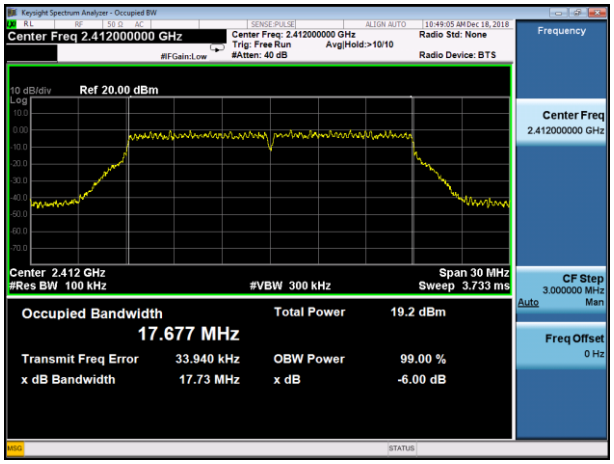

(802.11n40) 6dB Bandwidth plot on channel 3

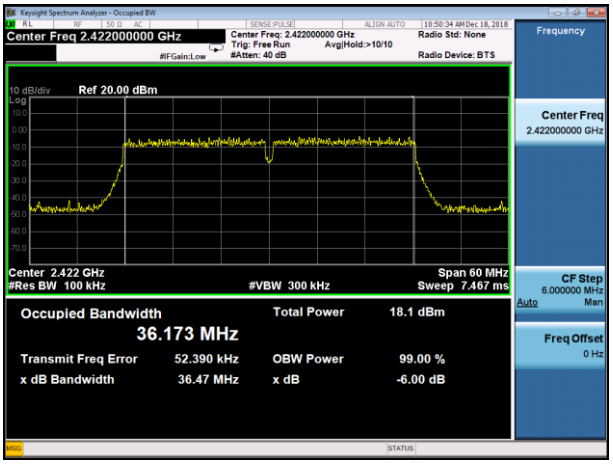

(802.11n20) 6dB Bandwidth plot on channel 6

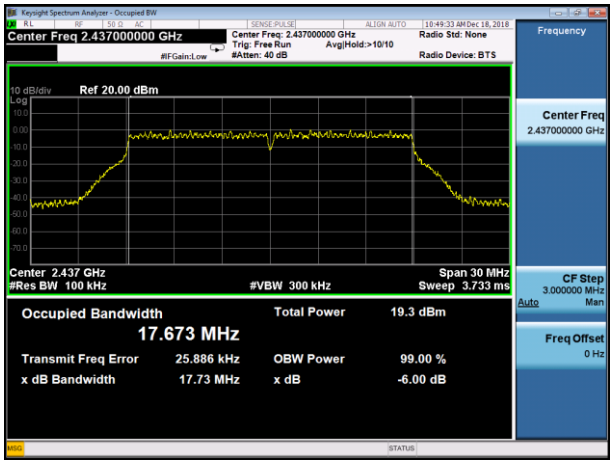

(802.11n40) 6dB Bandwidth plot on channel 6

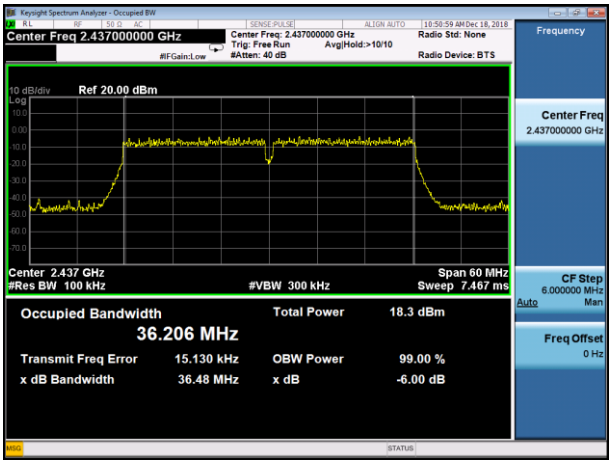

(802.11n20) 6dB Bandwidth plot on channel 11

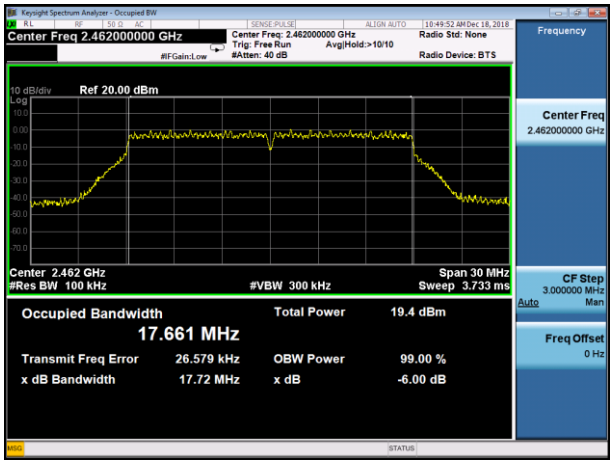

(802.11n40) 6dB Bandwidth plot on channel 9

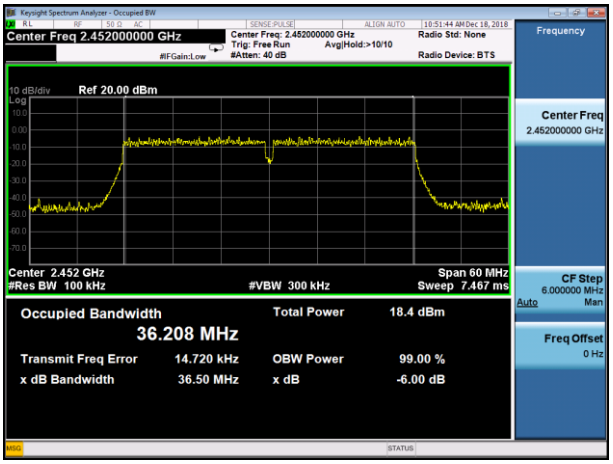

7.4 DUTY CYCLE

7.4.1 Applicable Standard

According to KDB 558074 D01 15.247 Meas Guidance v05 Section 6.

7.4.2 Conformance Limit

No limit requirement.

7.4.3 Measuring Instruments

The Measuring equipment is listed in the section 6.3 of this test report.

7.4.4 Test Setup

Please refer to Section 6.1 of this test report.

7.4.5 Test Procedure

The zero-span mode on a spectrum analyzer or EMI receiver if the response time and spacing between bins on the sweep are sufficient to permit accurate measurements of the on and off times of the transmitted signal. Set the center frequency of the instrument to the center frequency of the transmission. Set RBW ⩾ OBW if possible; otherwise, set RBW to the largest available value. Set VBW ⩾ RBW. Set detector = peak or average. The zero-span measurement method shall not be used unless both RBW and VBW are > 50/T and the number of sweep points across duration T exceeds 100. (For example, if VBW and/or RBW are limited to 3 MHz, then the zero-span method of measuring duty cycle shall not be used if T ⩽ 16.7 microseconds.)

The transmitter output is connected to the Spectrum Analyzer. We tested accroding to the zero-span measurement method, 6.0)b) in KDB 558074

The largest availble value of RBW is 8 MHz and VBW is 50 MHz. The zero-span method of measuring duty cycle shall not be used if T ⩽ 6.25 microseconds. (50/6.25 = 8)

The zero-span method was used because all measured T data are > 6.25 microseconds and both RBW and VBW are > 50/T.

The RF output of EUT was connected to the spectrum analyzer by RF cable and attenuator.
The path loss was compensated to the results for each measurement.
Set to the maximum power setting and enable the EUT transmit continuously.
The EUT was operating in controlled its channel.
Use the following spectrum analyzer settings:
Span = Zero Span
RBW = 8MHz(the largest available value)
VBW = 8MHz (≥ RBW)
Number of points in Sweep >100
Detector function = peak
Trace = Clear write
Measure T_{total} and T_{on}
Calculate Duty Cycle = T_{on} / T_{total}

7.4.6 Test Results

EUT:	PMA	Model No.:	PMA1.0
Temperature:	20 ℃	Relative Humidity:	48%
Test Mode:	802.11b/g/n20/n40	Test By:	Loren Luo

Antenna A

Mode	Data rate	Channel	T_{on}	T_{total}	Duty Cycle	Duty Cycle Factor (dB)	VBW Setting
802.11b	1Mbps	6	-	-	100%	0	10Hz
802.11g	6Mbps	6	-	-	100%	0	1KHz
802.11n HT20	MCS0	6	-	-	100%	0	1KHz
802.11n HT40	MCS0	6	-	-	100%	0	3KHz

Antenna B

Mode	Data rate	Channel	T_{on}	T_{total}	Duty Cycle	Duty Cycle Factor (dB)	VBW Setting
802.11b	1Mbps	6	-	-	100%	0	10Hz
802.11g	6Mbps	6	-	-	100%	0	1KHz
802.11n HT20	MCS0	6	-	-	100%	0	1KHz
802.11n HT40	MCS0	6	-	-	100%	0	3KHz

Note: All the modulation modes were tested, the data of the worst mode are described in the following table.

7.5 MAXIMUM OUTPUT POWER

7.5.1 Applicable Standard

According to FCC Part 15.247(b)(3) and KDB 558074 D01 15.247 Meas Guidance v05 Section 8.3.2.3.

7.5.2 Conformance Limit

The maximum peak conducted output power of the intentional radiator for systems using digital modulation in the 2400 - 2483.5 MHz bands shall not exceed: 1 Watt (30dBm). If transmitting antenna of directional gain greater than 6dBi is used, the peak output power from the intentional radiator shall be reduced below the above stated value by the amount in dB that the directional gain of the antenna exceeds 6 dBi. In case of point-to-point operation, the limit has to be reduced by 1dB for every 3dB that the directional gain of the antenna exceeds 6dBi.

7.5.3 Measuring Instruments

The following table is the setting of the power meter.

Power meter parameter	Setting
Detector	Peak

7.5.4 Test Setup

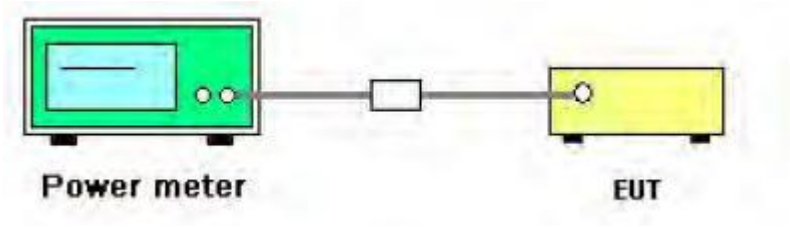

7.5.5 Test Procedure

The maximum peak conducted output power may be measured using a broadband peak RF power meter. The power meter shall have a video bandwidth that is greater than or equal to the *DTS bandwidth* and shall utilize a fast-responding diode detector.

7.5.6 EUT opration during Test

The EUT was programmed to be in continuously transmitting mode.

7.5.7 Test Results

EUT:	PMA	Model No.:	PMA1.0
Temperature:	20 ℃	Relative Humidity:	48%
Test Mode:	802.11b/g/n20/n40	Test By:	Loren Luo

Note: EUT has two antennas, and different modes support different transmit mode what describe as Following form:

Mode	Tx/Rx
11b, 11g	1Tx, 1Rx
11n(HT20/HT40)	2Tx, 2Rx

Test Channel	Frequency (MHz)	Power Setting	Duty Cycle Factor (dB)	Peak Output Power(dBm)		Total		LIMIT (dBm)	Verdict
				ANT A	ANT B	(dBm)			
802.11b									
1	2412	Default	0	14.80	13.90	-	-	28.65	PASS
6	2437	Default	0	14.80	14.40	-	-	28.65	PASS
11	2462	Default	0	14.80	14.40	-	-	28.65	PASS
802.11g									
1	2412	Default	0	12.40	11.50	-	-	28.65	PASS
6	2437	Default	0	12.40	11.90	-	-	28.65	PASS
11	2462	Default	0	12.50	11.90	-	-	28.65	PASS
802.11n HT20									
1	2412	Default	0	11.10	10.30	13.73		28.65	PASS
6	2437	Default	0	11.20	10.70	13.97		28.65	PASS
11	2462	Default	0	11.50	10.70	14.13		28.65	PASS
802.11n HT40									
3	2422	Default	0	11.70	10.80	14.28		28.65	PASS
6	2437	Default	0	11.70	11.00	14.37		28.65	PASS
9	2452	Default	0	11.80	11.40	14.61		28.65	PASS

Note: For 802.11n has MIMO mode. Directional gain=7.35dbi
7.35dbi>6.0 dbi so power limit= 30.00-(7.35-6)=28.65 in dBm

7.6 POWER SPECTRAL DENSITY

7.6.1 Applicable Standard

According to FCC Part 15.247(e) and KDB 558074 D01 15.247 Meas Guidance v05 Section 8.4.

7.6.2 Conformance Limit

The transmitter power spectral density conducted from the transmitter to the antenna shall not be greater than 8 dBm in any 3 kHz band during any time interval of continuous transmission.

7.6.3 Measuring Instruments

The Measuring equipment is listed in the section 6.3 of this test report.

7.6.4 Test Setup

Please refer to Section 6.1 of this test report.

7.6.5 Test Procedure

The testing follows Measurement Procedure Subclause 11.10.2 of ANSI C63.10
This procedure shall be used if maximum peak conducted output power was used to demonstrate compliance, and is optional if the maximum conducted (average) output power was used to demonstrate compliance.

a) Set analyzer center frequency to DTS channel center frequency.
b) Set the span to 1.5 times the DTS bandwidth.
c) Set the RBW to: 3 kHz ≤ RBW ≤ 100 kHz.
d) Set the VBW ≥ 3 *RBW.
e) Detector = peak.
f) Sweep time = auto couple.
g) Trace mode = max hold.
h) Allow trace to fully stabilize.
i) Use the peak marker function to determine the maximum amplitude level within the RBW.
j) If measured value exceeds limit, reduce RBW (no less than 3 kHz) and repeat.

7.6.6 Test Results

EUT:	PMA	Model No.:	PMA1.0
Temperature:	20 ℃	Relative Humidity:	48%
Test Mode:	802.11b/g/n20/n40	Test By:	Loren Luo

Note:
A(B) Represent the value of antenna A and B, The worst data is Antenna B, only shown Antenna B Plot.

EUT has two antennas, and different modes support different transmit mode what describe as Following form:

Mode	Tx/Rx
11b, 11g	1Tx, 1Rx
11n(HT20/HT40)	2Tx, 2Rx

Test Channel	Frequency (MHz)	Power Setting	Duty Cycle Factor (dB)	Peak Power Density (dBm/3KHz)		Total (dBm)	LIMIT (dBm/3KHz)	Verdict
				ANT A	ANT B			
802.11b								
1	2412	Default	0	-9.293	-9.715	-	6.65	PASS
6	2437	Default	0	-9.085	-8.343	-	6.65	PASS
11	2462	Default	0	-8.517	-9.345	-	6.65	PASS
802.11g								
1	2412	Default	0	-14.313	-15.204	-	6.65	PASS
6	2437	Default	0	-14.018	-14.967	-	6.65	PASS
11	2462	Default	0	-14.160	-14.345	-	6.65	PASS
802.11n HT20								
1	2412	Default	0	-14.456	-15.141	-11.77	6.65	PASS
6	2437	Default	0	-12.597	-15.618	-10.84	6.65	PASS
11	2462	Default	0	-13.754	-14.924	-11.29	6.65	PASS
802.11n HT40								
3	2422	Default	0	-16.085	-14.491	-12.20	6.65	PASS
6	2437	Default	0	-15.033	-14.793	-11.90	6.65	PASS
9	2452	Default	0	-14.782	-15.341	-12.04	6.65	PASS

Note: For 802.11n has MIMO mode. Directional gain=7.35dbi
7.35dbi>6.0 dbi so power limit= 8-(7.35-6)=6.65 in dBm

Test plot

(802.11b) PSD plot on channel 1

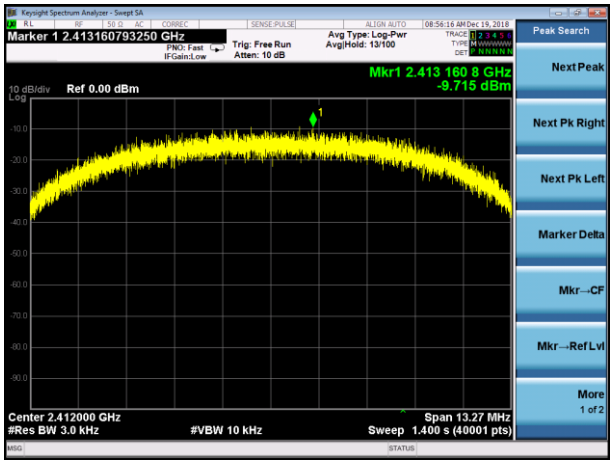

(802.11g) PSD plot on channel 1

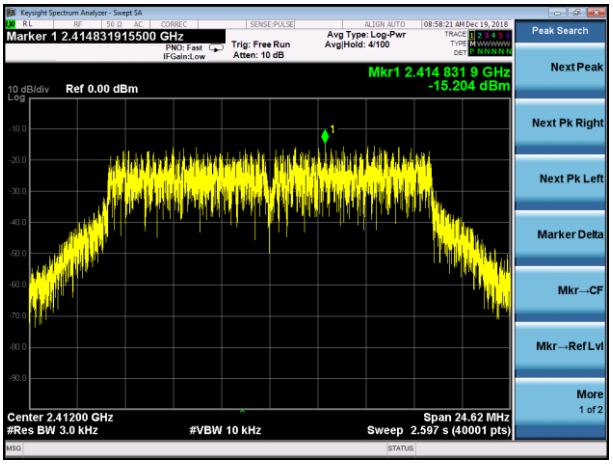

(802.11b) PSD plot on channel 6

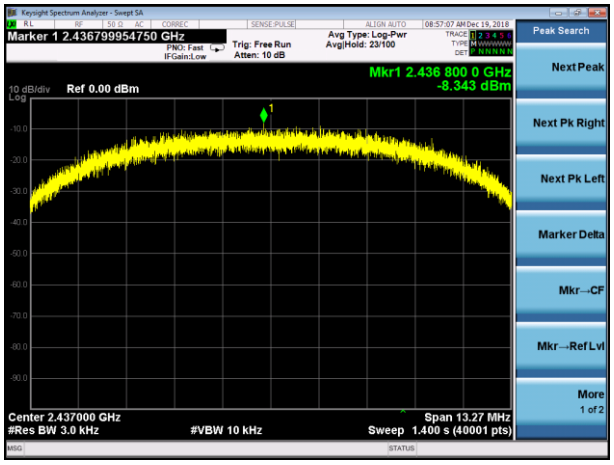

(802.11g) PSD plot on channel 6

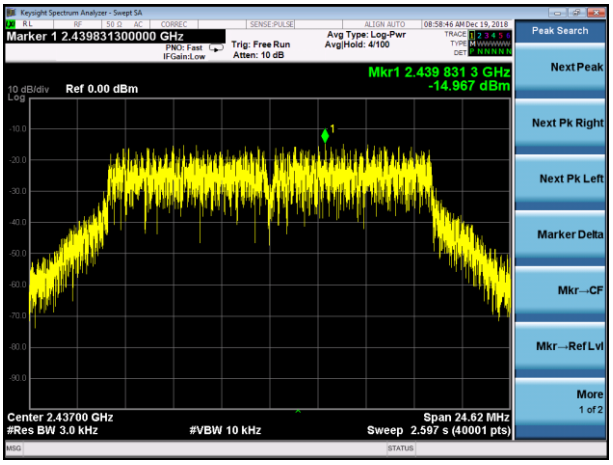

(802.11b) PSD plot on channel 11

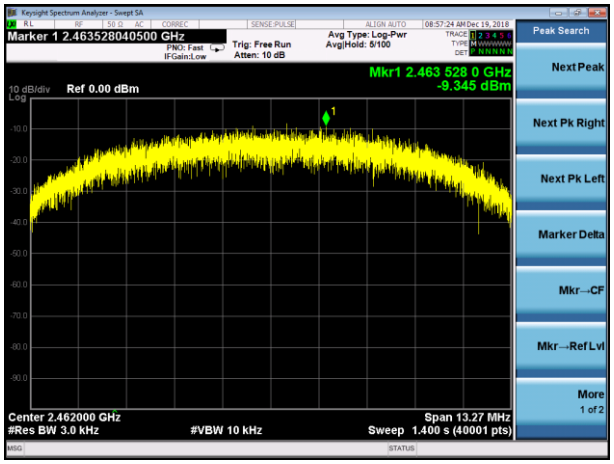

(802.11g) PSD plot on channel 11

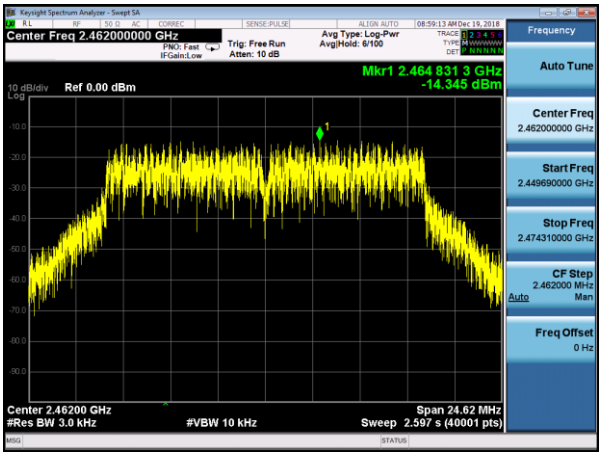

Test plot

(802.11n20) PSD plot on channel 1

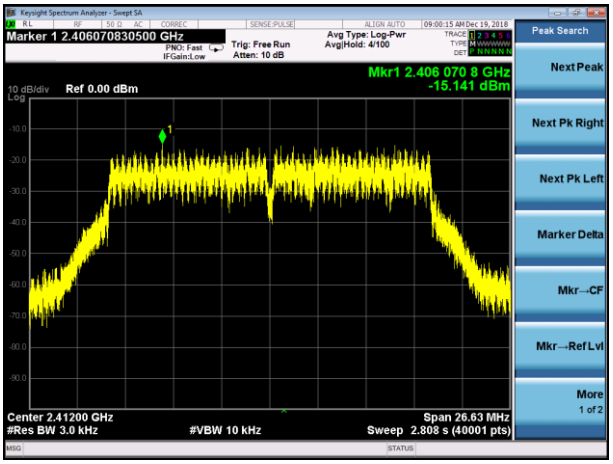

(802.11n40) PSD plot on channel 3

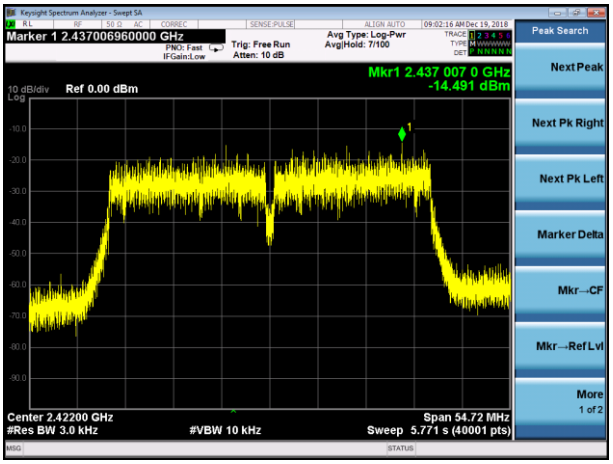

(802.11n20) PSD plot on channel 6

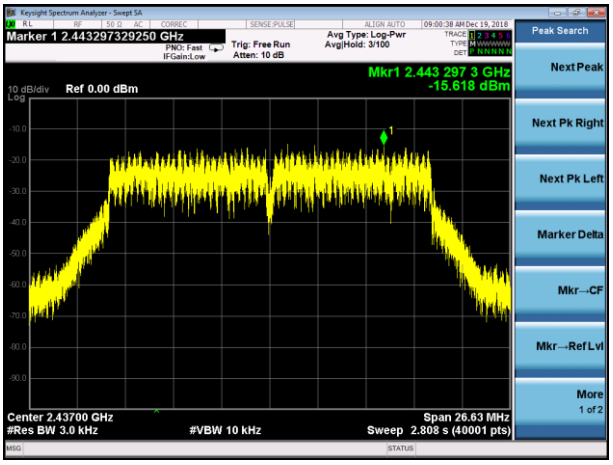

(802.11n40) PSD plot on channel 6

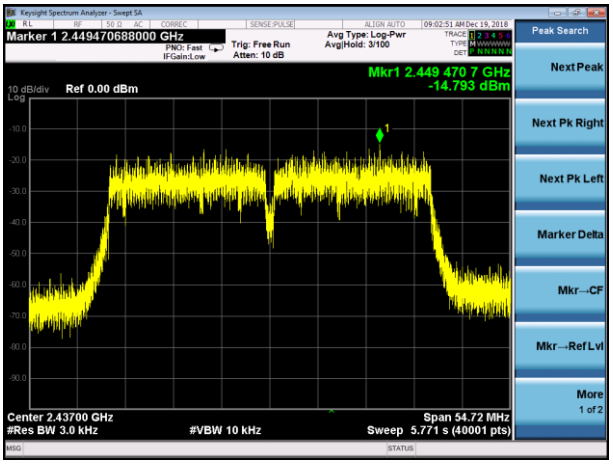

(802.11n20) PSD plot on channel 11

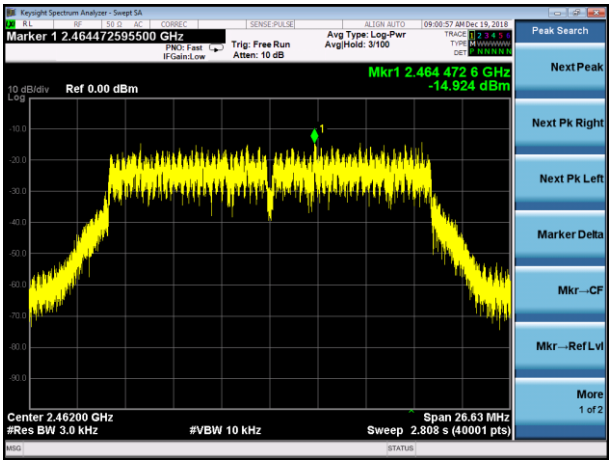

(802.11n40) PSD plot on channel 9

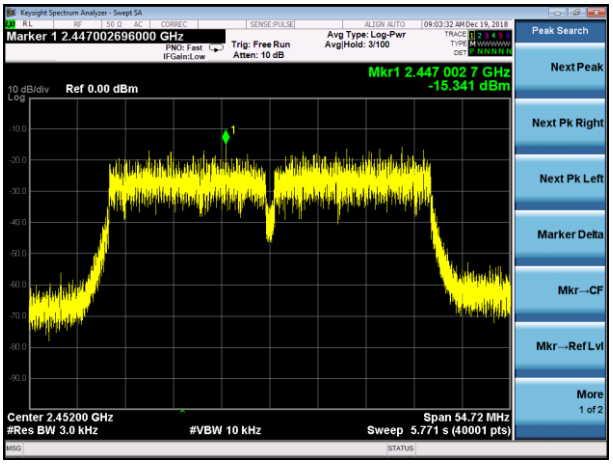

7.7 CONDUCTED BAND EDGE MEASUREMENT

7.7.1 Applicable Standard

According to FCC Part 15.247(d) and KDB 558074 D01 15.247 Meas Guidance v05 Section 8.7.

7.7.2 Conformance Limit

In any 100 kHz bandwidth outside the frequency band in which the spread spectrum or digitally modulated intentional radiator is operating, the radio frequency power that is produced by the intentional radiator shall be at least 20 dB below that in the 100 kHz bandwidth within the band that contains the highest level of the desired power, based on either an RF conducted or a radiated measurement, provided the transmitter demonstrates compliance with the peak conducted power limits. If the transmitter complies with the conducted power limits based on the use of RMS averaging over a time interval, as permitted under paragraph (b)(3) of this section, the attenuation required under this paragraph shall be 30 dB instead of 20 dB.

7.7.3 Measuring Instruments

The Measuring equipment is listed in the section 6.3 of this test report.

7.7.4 Test Setup

Please refer to Section 6.1 of this test report.

7.7.5 Test Procedure

The testing follows FCC KDB 558074 D01 15.247 Meas Guidance v05 Section 8.7.
The RF output of EUT was connected to the spectrum analyzer by RF cable and attenuator.
The path loss was compensated to the results for each measurement.
Set to the maximum power setting and enable the EUT transmit continuously.
The EUT was operating in controlled its channel.
Set RBW to 100 kHz and VBW of spectrum analyzer to 300 kHz with a convenient frequency span including 100 kHz bandwidth from band edge.
Measure the highest amplitude appearing on spectral display and set it as a reference level. Plot the graph with marking the highest point and edge frequency.
Repeat above procedures until all measured frequencies were complete.