FCC Part 15.407

RSS-247 Issue 2, Feb 2017; RSS-Gen Issue 5, Mar 2019

DYNAMIC FREQUENCY SELECTION

TEST REPORT

For

Smartlabs Holding Ltd

Nafpliou 15, 3025 Limassol, Cyprus

Report Type	**CIIPC Report**
FCC Identity:	**FCC ID: 2ASFLSML5041W1**
IC Identity:	**IC: 24800-SML5041W1**
Brand Name	**Smartlabs**
Product Name	**IPTV Set-top Box**
Model Name	**SML-5041W**
Report Number	**RLK210201001-FRW02**
Report Date	**2021/07/07**
Reviewed By	**Zeus Chen** Zeus Chen

Prepared By:

Bay Area Compliance Laboratories Corp.(Linkou Laboratory)

No. 6, Wende 2Rd., Guishan Dist., Taoyuan City 33382, Taiwan (R.O.C.)

Tel: +886 (3)3961072; Fax: +886 (3) 3961027

www.bacl.com.tw

Note: This test report is prepared for the customer shown above and for the device described herein. It may not be duplicated or used in part without prior written consent from Bay Area Compliance Laboratories Corp. (Linkou Laboratory)

Revision History

Revision	Report Number	Issue Date	Description
1.0	RLK210201001-FRW02	2021/07/07	Original Report

TABLE OF CONTENTS

1 GENERAL INFORMATION 4

1.1 PRODUCT DESCRIPTION FOR EQUIPMENT UNDER TEST (EUT) 4
1.2 OPERATION CONDITION OF EUT 5
1.3 OBJECTIVE AND TEST METHODOLOGY 5
1.4 ENVIRONMENTAL CONDITIONS AND TEST DATE 5
1.5 TEST FACILITY 5

2 SYSTEM TEST CONFIGURATION 6

2.1 TEST CHANNELS AND DESCRIPTION OF WORST TEST CONFIGURATION 6
2.2 SUPPORT EQUIPMENT LIST AND EXTERNAL CABLE LIST 6
2.3 TEST EQUIPMENT LIST AND 6

3 SUMMARY OF TEST RESULTS 7

4 APPLICABLE STANDARDS AND TEST REQUIREMENTS 8

4.1 DFS REQUIREMENT 8
4.2 DFS MEASUREMENT SYSTEM AND BLOCK DIAGRAM 13
4.3 TEST PROCEDURE 14
4.4 DESCRIPTION OF EUT 15
4.5 CHANNEL LOADING 15

5 RADAR WAVEFORM CALIBRATION 16

5.1 BLOCK DIAGRAM OF RADIATION CALIBRATION 16
5.2 TEST RESULT 16

6 CHANNEL MOVE TIME AND CHANNEL CLOSING TRANSMISSION TIME 17

6.1 TEST PROCEDURE 17
6.2 TEST RESULT 17

7 NON-OCCUPANCY PERIOD 19

7.1 TEST PROCEDURE 19
7.2 TEST RESULTS 19

1 General Information

1.1 Product Description for Equipment under Test (EUT)

Application	**Smartlabs Holding Ltd** Nafpliou 15, 3025 Limassol, Cyprus
Manufacturer	**Smartlabs Holding Ltd** Nafpliou 15, 3025 Limassol, Cyprus
Brand Name	Smartlabs
Product (Equipment)	IPTV Set-top Box
Model Name	SML-5041W
EUT Function	IEEE 802.11 an(HT20/HT40) + ac(VHT20/VHT40/VHT80) Note: Master mode not have ac VHT80 function.
Frequency Range	UNII-2a: 5250 MHz - 5350 MHz UNII-2c: 5470 MHz - 5725 MHz
Number of Channels	**For UNII-2a** IEEE 802.11a/n HT20/ac VHT20: 4 Channels IEEE 802.11n HT40/ac VHT40: 2 Channels IEEE 802.11ac VHT80: 1 Channels **For UNII-2c:** (include across channel) IEEE 802.11a/n HT20/ac VHT20: 12 Channel IEEE 802.11n HT40/ac VHT40: 6 Channels IEEE 802.11ac VHT80: 3 Channels
Operation Mode	☐Master ☐Bridge ☐Hotspot ☐Mesh (Client without radar detection) ☐Client with radar detection ☒Client without radar detection
TPC Function	☒With TPC ☐Without TPC
Firmware Version	4.22.1
Wi-Fi Driver Version	5.9.0.8_37203.20200904_COEX20200103-1717
OS Version	Linux 4_22_1 3.14.29
Antenna Information	Brand: Smartlabs; Model: SML-5041W; Type: PIFA; Gain: 1.40 dBi
Related Submittal(s)/Grant(s)	**FCC Part 15.247 DTS with FCC ID: 2ASFLSML5041W1** **FCC Part 15.407 UNII with FCC ID: 2ASFLSML5041W1**
Received Date	2021-02-01
Date of Test	2021-05-26 – 2021-05-27

Note: All measurement and test data in this report was gathered from production sample serial number: 210201001. Assigned by Bay Area Compliance Laboratories Corp. (Linkou Laboratory)

1.2 Operation Condition of EUT

Power Operation (Voltage Range)	☒ AC 120V/60Hz ☒ Adapter Brand: TEKA, Model: TEKA-TC120150US I/P: 100-240Vac, 50/60Hz, 0.5A MAX O/P: 12Vdc, 1.5A ☐ By Power Cord
	☐ DC Type ☐ DC Power Supply ☐ Battery ☐ External from USB Cable
	☐ Host System

1.3 Objective and Test Methodology

The Objective of this Test Report was to document the compliance of the Smartlabs Holding Ltd. Appliance (Model(s): SML-5041W,) to the requirements of the following Standards:

- Part 2, Subpart J, Part 15, Subparts A and C, section 15.407 of the Federal Communication Commission's rules.
- ANSI C63.10-2013 of t American National Standard of Procedures for Compliance Testing of Unlicensed Wireless Devices.
- RSS-Gen Issue 5, Mar 2019— General Requirements for Compliance of Radio Apparatus
- RSS-247 Issue 2, Feb 2017— Digital Transmission Systems (DTSs), Frequency Hopping Systems (FHSs) and Licence-Exempt Local Area Network (LE-LAN) Devices
- FCC KDB 905462 D02 UNII DFS Compliance Procedures New Rules v02
- FCC KDB 905462 D03 UNII Clients Without Radar Detection New Rules v01r02

1.4 Environmental Conditions and Test Date

Test Site	Test Date	Temperature (°C)	Relative Humidity (%)	Test Engineer
DFS (DFS-Room)	2021-02-26 – 2021-02-27	22.8-23.1	55-56	Ethan Shao

1.5 Test Facility

The Test site used by Bay Area Compliance Laboratories Corp. (Linkou Laboratory) to collect test data is located on

☒ No.6, Wende 2Rd., Guishan Dist., Taoyuan City 33382, Taiwan (R.O.C.).

Bay Area Compliance Laboratories Corp. (Linkou Laboratory) Lab is accredited to ISO 17025 by Taiwan Accreditation Foundation (TAF code: 3546) by Mutual Recognition Agreement (MRA). The test site has been approved by the FCC under the KDB 974614 D01 and is listed in the FCC Public Access Link (PAL) database. The FCC Registration No.: 0027578244. Designation No.: TW3546. The Test Firm Registration No.: 181430. For ISED#: 25102 and CAB identifier is TW3546.

2 System Test Configuration

2.1 Test Channels and Description of Worst Test Configuration

The system was configured for testing in testing mode which was provided by manufacturer. No special accessory, No modification was made to the EUT and No special equipment used during test. The test was performed under: DOS command, which was provided by the manufacturer.

2.2 Support Equipment List and External Cable List

Description	Manufacturer	Model Number	Serial Number
Laptop	APPLE	A1706	N/A
Laptop	LENOVO	Y520-15IKBN	PF17KU77
AP Router	NETGEAR	R7800	4H78815T001C1

2.3 Test Equipment List and

Description	Manufacture.	Model	Serial No.	Cal. Date.	Cal. Due.
MXG Vector Signal Generator	KEYSIGHT	N5182B	MY53051691	2020/12/27	2021/12/26
MXG X-Series Microwave Analog Signal Generator	KEYSIGHT	N5183B	MY53270771	2020/12/22	2021/12/21
EXA Signal Analyzer	Keysight	N9010A	MY55370253	2021/06/03	2022/06/02
Horn Antenna	EMCO	3115	00040736	2021/03/19	2022/03/18
Horn Antenna	EMCO	3115	2058	2021/03/18	2021/03/17
ETSI Certification of Regulations Test Solution	World Pallas	ETSI Test System v1.02.23	KYLK-01	N.C.R	N.C.R
Software	BACL	DFS Aggregate v.1	DFSA-01	N.C.R	N.C.R

***Statement of Traceability:** The testing equipment's listed above have finished the calibration by Electronics Testing Center, Taiwan (ETC) or other laboratories which were accredited by TAF or equivalent organizations. The calibration result could be traceable to the International System of Units (SI).

3 Summary of Test Results

A compliant test report to FCC 15.407 and RSS-247 section 6.3 shall be sufficient to show compliance of a transmitter or receiver with the requirement of this standard.
The following result table represents the list of measurements required under the CFR §47 Part 15.407(h), RSS-247 section 6.3 and KDB: 905462 D02 UNII DFS Compliance Procedures New Rules v02.

Dynamic frequency selection for devices operating in the bands 5250-5350 MHz, 5470-5600 MHz and 5650-5725 MHz, ISED requires the use of either the FCC KDB Procedure 905462 3 for demonstrating compliance with the DFS radar detection requirements set out in this section.

If any part of an operating device's emission bandwidth falls in the bands 5250-5350 MHz, 5470-5600 MHz or 5650-5725 MHz, the device shall comply with requirements in the following sections.

Test Item	Description of Test	Result
Detection Bandwidth	UNII Detection Bandwidth	Not applicable[Note1]
Performance Requirements Check	Initial Channel Availability Check Time (CAC)	Not applicable [Note1]
	Radar Burst at the Beginning of the CAC	Not applicable [Note1]
	Radar Burst at the End of the CAC	Not applicable [Note1]
In-Service Monitoring	Channel Move Time	Compliance
	Channel Closing Transmission Time	Compliance
	Non-Occupancy Period	Not applicable [Note1]
Radar Detection	Statistical Performance Check	Not applicable [Note1]

Note1: The EUT is the client device without radar detection

4 Applicable Standards and Test Requirements

4.1 DFS Requirement

According to RSS-247 Issue 2 Section 6.3.

Dynamic frequency selection for devices operating in the bands 5250-5350 MHz, 5470-5600 MHz and 5650-5725 MHz, ISED requires the use of either the FCC KDB Procedure 905462 for demonstrating compliance with the DFS radar detection requirements set out in this section.

If any part of an operating device's emission bandwidth falls in the bands 5250-5350 MHz, 5470-5600 MHz or 5650-5725 MHz, the device shall comply with requirements in the following sections.

- DFS radar signal detection threshold

Devices shall employ a DFS radar detection mechanism to detect the presence of radar systems and to avoid co-channel operation with radar systems. The device must detect radar signals within its entire emission bandwidth. The minimum DFS radar signal detection threshold is described below in Table 1.

Table 1: DFS Detection threshold for master devices and slave devices with radar detection

Devices	DFS Threshold
Devices with an e.i.r.p. < 200 mW AND a Power Spectral Density < 10 dBm/MHz	-62 dBm
Devices with 200 mW ≤ e.i.r.p. ≤ 1 W	-64 dBm
Note: The detection threshold power is the received power, averaged over a 1-microsecond reference to a 0 dBi antenna.	

- Operational requirements

Devices shall comply with the following requirements, however, the requirement for in-service monitoring does not apply to slave devices without radar detection.

a) In-service monitoring: an LE-LAN device shall be able to monitor the operating channel to check that a co-channel radar has not moved or started operation within range of the LE-LAN device. During in-service monitoring, the LE-LAN radar detection function continuously searches for radar signals between normal LE-LAN transmissions.

b) Channel availability check time: the device shall check whether there is a radar system already operating on the channel before it initiates a transmission on a channel and when it moves to a channel. The device may start using the channel if no radar signal with a power level greater than the interference threshold value specified in section 6.3.1 above is detected within 60 seconds. This requirement only applies in the master operational mode.

c) Channel move time: after a radar signal is detected, the device shall cease all transmissions on the operating channel within 10 seconds.

d) Channel closing transmission time: is comprised of 200 ms starting at the beginning of the channel move time plus any additional intermittent control signals required to facilitate a channel move (an aggregate of 60 ms) over the remaining 10-second period of the channel move time.

e) Non-occupancy period: a channel that has been flagged as containing a radar signal, either by a channel availability check or in-service monitoring, is subject to a 30-minute non-occupancy period where the channel cannot be used by the LE-LAN device. The non-occupancy period starts from the time that the radar signal is detected.

- Additional requirements

The following requirements shall apply:

a) The device shall automatically discontinue transmission in cases of absence of information to transmit, or operational failure. A description on how this is done shall accompany the application for equipment certification. Note that this is not intended to prohibit transmission of control or signalling information or the use of repetitive codes where required by the technology.

b) All LE-LAN devices must contain security features to protect against modification of software by unauthorized parties. Manufacturers must implement security features in any digitally modulated devices capable of

operating in any of the frequency ranges within the 5 GHz band, so that third parties are not able to reprogram the device to operate outside the parameters for which the device was certified. The software must prevent the user from operating the transmitter with operating frequencies, output power, modulation types or other radio frequency parameters outside those that were approved for the device. Manufacturers may use various means, including the use of a private network that allows only authenticated users to download software, electronic signatures in software or coding in hardware that is decoded by software to verify that new software can be legally loaded into a device to meet these requirements and must describe the methods in their application for equipment certification. Manufacturers must take steps to ensure that DFS functionality cannot be disabled by the operator of the LE-LAN device.

c) The user manual for LE-LAN devices shall contain instructions related to the restrictions mentioned in the above sections, namely that:

i. the device for operation in the band 5150–5250 MHz is only for indoor use to reduce the potential for harmful interference to co-channel mobile satellite systems;4

ii. for devices with detachable antenna(s), the maximum antenna gain permitted for devices in the bands 5250-5350 MHz and 5470-5725 MHz shall be such that the equipment still complies with the e.i.r.p. limit;

iii. for devices with detachable antenna(s), the maximum antenna gain permitted for devices in the band 5725-5850 MHz shall be such that the equipment still complies with the e.i.r.p. limits as appropriate; and

iv. where applicable, antenna type(s), antenna models(s), and worst-case tilt angle(s) necessary to remain compliant with the e.i.r.p. elevation mask requirement set forth in section 6.2.2.3 shall be clearly indicated.

- According to FCC KDB 905462 D02 UNII DFS Compliance Procedures New Rules v02 and RSS

Table 1: Applicability of DFS Requirements Prior to Use of a Channel

Requirement	Operational Mode		
	Master	Client Without Radar Detection	Client With Radar Detection
Non-Occupancy Period	Yes	Not required	Yes
DFS Detection Threshold	Yes	Not required	Yes
Channel Availability Check Time	Yes	Not required	Not required
U-NII Detection Bandwidth	Yes	Not required	Yes

Table 2: Applicability of DFS requirements during normal operation

Requirement	Operational Mode	
	Master Device or Client with Radar Detection	Client Without Radar Detection
DFS Detection Threshold	Yes	Not required
Channel Closing Transmission Time	Yes	Yes
Channel Move Time	Yes	Yes
U-NII Detection Bandwidth	Yes	Not required

Additional requirements for devices with multiple bandwidth modes	Master Device or Client with Radar Detection	Client Without Radar Detection
U-NII Detection Bandwidth and Statistical Performance Check	All BW modes must be tested	Not required
Channel Move Time and Channel Closing Transmission Time	Test using widest BW mode available	Test using the widest BW mode available for the link
All other tests	Any single BW mode	Not required
Note: Frequencies selected for statistical performance check (Section 7.8.4) should include several frequencies within the radar detection bandwidth and frequencies near the edge of the radar detection bandwidth. For 802.11 devices it is suggested to select frequencies in each of the bonded 20 MHz channels and the channel center frequency.		

The operational behavior and individual DFS requirements that are associated with these modes are as follows:

Table 3: DFS Detection Thresholds for Master Devices and Client Devices with Radar Detection

Maximum Transmit Power	Value (See Notes 1, 2, and 3)
EIRP ≥ 200 milliwatt	-64 dBm
EIRP < 200 milliwatt and power spectral density < 10 dBm/MHz	-62 dBm
EIRP < 200 milliwatt that do not meet the power spectral density requirement	-64 dBm
Note 1: This is the level at the input of the receiver assuming a 0 dBi receive antenna. **Note 2:** Throughout these test procedures an additional 1 dB has been added to the amplitude of the test transmission waveforms to account for variations in measurement equipment. This will ensure that the test signal is at or above the detection threshold level to trigger a DFS response. **Note3:** EIRP is based on the highest antenna gain. For MIMO devices refer to KDB Publication 662911 D01.	

Table 4: DFS Response Requirement Values

Parameter	Value
Non-occupancy period	Minimum 30 minutes
Channel Availability Check Time	60 seconds
Channel Move Time	10 seconds See Note 1.
Channel Closing Transmission Time	200 milliseconds + an aggregate of 60 milliseconds over remaining 10 second period. See Notes 1 and 2.
U-NII Detection Bandwidth	Minimum 100% of the U-NII 99% transmission power bandwidth. See Note 3.
Note 1: *Channel Move Time* and the *Channel Closing Transmission Time* should be performed with Radar Type 0. The measurement timing begins at the end of the Radar Type 0 burst. **Note 2:** The *Channel Closing Transmission Time* is comprised of 200 milliseconds starting at the beginning of the *Channel Move Time* plus any additional intermittent control signals required to facilitate a *Channel* move (an aggregate of 60 milliseconds) during the remainder of the 10 second period. The aggregate duration of control signals will not count quiet periods in between transmissions. **Note 3:** During the *U-NII Detection Bandwidth* detection test, radar type 0 should be used. For each frequency step the minimum percentage of detection is 90 percent. Measurements are performed with no data traffic.	

Table 5 – Short Pulse Radar Test Waveforms

Radar Type	Pulse Width (µsec)	PRI (µsec)	Number of Pulses	Minimum Percentage of Successful Detection	Minimum Number of Trials
0	1	1428	18	See Note 1	See Note 1
1	1	Test A: 15 unique PRI values randomly selected from the list of 23 PRI values in Table 5a	$\text{Roundup}\left\{\left(\frac{1}{360}\right)\cdot\left(\frac{19\cdot 10^6}{\text{PRI}_{\mu\text{sec}}}\right)\right\}$	60%	30
		Test B: 15 unique PRI values randomly selected within the range of 518-3066 µsec, with a minimum increment of 1 µsec, excluding PRI values selected in Test A			
2	1-5	150-230	23-29	60%	30
3	6-10	200-500	16-18	60%	30
4	11-20	200-500	12-16	60%	30
Aggregate (Radar Types 1-4)				80%	120
Note 1: Short Pulse Radar Type 0 should be used for the detection bandwidth test, channel move time, and channel closing time tests.					

A minimum of 30 unique waveforms are required for each of the Short Pulse Radar Types 2 through 4. If more than 30 waveforms are used for Short Pulse Radar Types 2 through 4, then each additional waveform must also be unique and not repeated from the previous waveforms. If more than 30 waveforms are used for Short Pulse Radar Type 1, then each additional waveform is generated with Test B and must also be unique and not repeated from the previous waveforms in Tests A or B.

For example if in Short Pulse Radar Type 1 Test B a PRI of 3066 µsec is selected, the number of pulses would be $\text{Roundup}\left\{\left(\frac{1}{360}\right)\cdot\left(\frac{19\cdot 10^6}{3066}\right)\right\}$ = Round up {17.2} = 18.

Table 5a - Pulse Repetition Intervals Values for Test A

Pulse Repetition Frequency Number	Pulse Repetition Frequency (Pulses Per Second)	Pulse Repetition Interval (Microseconds)
1	1930.5	518
2	1858.7	538
3	1792.1	558
4	1730.1	578
5	1672.2	598
6	1618.1	618
7	1567.4	638
8	1519.8	658
9	1474.9	678
10	1432.7	698
11	1392.8	718
12	1355	738
13	1319.3	758
14	1285.3	778
15	1253.1	798
16	1222.5	818
17	1193.3	838
18	1165.6	858
19	1139	878
20	1113.6	898
21	1089.3	918
22	1066.1	938
23	326.2	3066

The aggregate is the average of the percentage of successful detections of Short Pulse Radar Types 1-4. For example, the following table indicates how to compute the aggregate of percentage of successful detections.

Radar Type	Number of Trials	Number of Successful Detections	Minimum Percentage of Successful Detection
1	35	29	82.9%
2	30	18	60%
3	30	27	90%
4	50	44	88%
Aggregate (82.9% + 60% + 90% + 88%)/4 = 80.2%			

Table 6 – Long Pulse Radar Test Waveform

Radar Type	Pulse Width (µsec)	Chirp Width (MHz)	PRI (µsec)	Number of Pulses per *Burst*	Number of *Bursts*	Minimum Percentage of Successful Detection	Minimum Number of Trials
5	50-100	5-20	1000-2000	1-3	8-20	80%	30

Table 7 – Frequency Hopping Radar Test Waveform

Radar Type	Pulse Width (µsec)	PRI (µsec)	Pulses per Hop	Hopping Rate (kHz)	Hopping Sequence Length (msec)	Minimum Percentage of Successful Detection	Minimum Number of Trials
6	1	333	9	0.333	300	70%	30

4.2 DFS Measurement System and Block Diagram

DFS measurement system consists of two subsystems:

(1) The radar signal generating subsystem. (2) The traffic monitoring subsystem.

- **Conducted Method:**

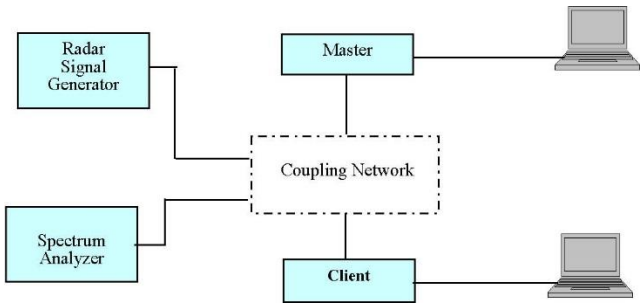

- **Setup for Master with injection at the Master:**

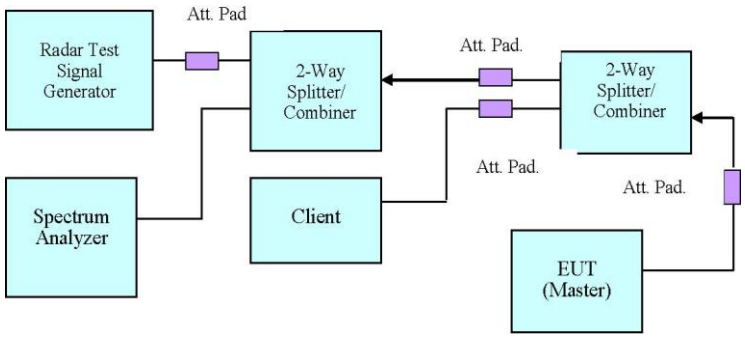

- **Setup for Client with injection at the Master:**

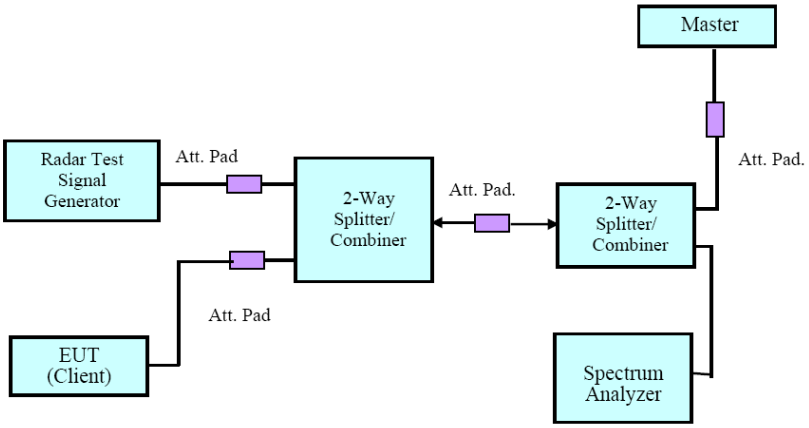

- **Setup for Client with injection at the Client**:

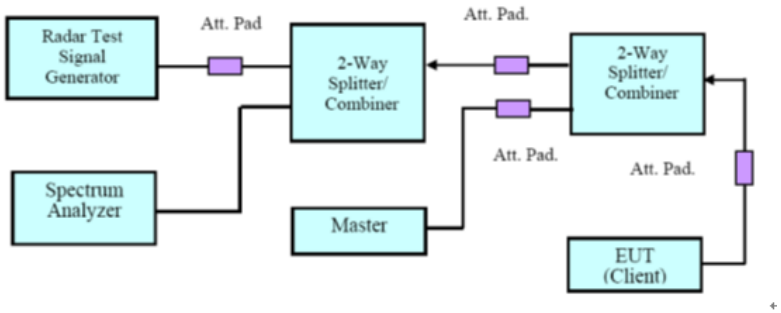

- **Radiated Method**

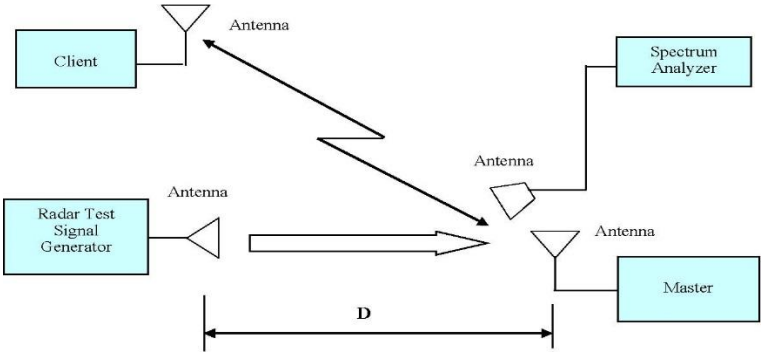

- **Calibration of DFS Detection Threshold Level**

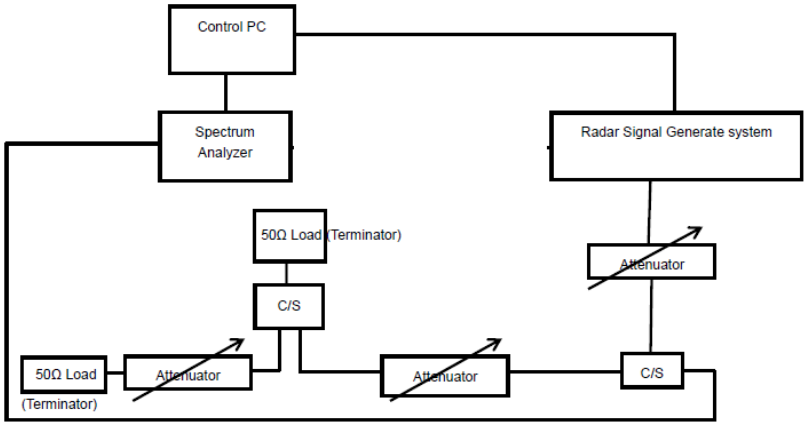

4.3 Test Procedure

A spectrum analyzer is used as a monitor verifies that the EUT status including Channel Closing Transmission Time and Channel Move Time, and does not transmit on a Channel during the Non-Occupancy Period after the diction and Channel move. It is also used to monitor EUT transmissions during the Channel Availability Check Time.

4.4 Description of EUT

The EUT operates in 5250-5350 MHz and 5470-5725 MHz range.

The rated output power of master device is >23 dBm (EIRP), therefore the required interference threshold level is -64 dBm, the required radiated threshold at antenna port is -64dBm.

Throughout these test procedures an additional 1 dB has been added to the amplitude of the test transmission waveforms to account for variations in measurement equipment. This will ensure that the test signal is at or above the detection threshold level to trigger a DFS response.

The calibrated radiated DFS detection threshold level is set to -62+ (Master Antenna Gain:)= -62+0.11= -61.89 dBm.

4.5 Channel Loading

System testing will be performed with channel-loading using means appropriate to the data types that are used by the unlicensed device. The following requirements apply:

a) The data file must be of a type that is typical for the device (i.e., MPEG-2, MPEG-4, WAV, MP3, MP4, AVI, etc.) and must generally be transmitting in a streaming mode.

b) Software to ping the client is permitted to simulate data transfer but must have random ping intervals.

c) Timing plots are required with calculations demonstrating a minimum channel loading of approximately 17% or greater. For example, channel loading can be estimated by setting the spectrum analyzer for zero span and approximate the Time On/ (Time On + Off Time). This can be done with any appropriate channel BW and modulation type.

d) Unicast or Multicast protocols are preferable but other protocols may be used. The appropriate protocol used must be described in the test procedures.

The sample is use method (C)

WLAN traffic is generated by streaming the video file TestFile.mpg, this file is used by IP and Frame based systems for loading the test channel during the In-service compliance testing of the U-NII device. The file is streamed from the Access Point to the Client in full motion video mode using the media player with the V2.61 Codec package.

5 Radar Waveform Calibration

5.1 Block Diagram of Radiation Calibration

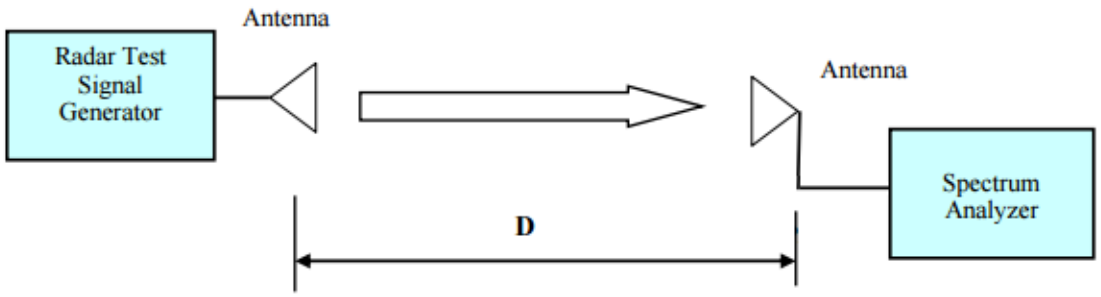

5.2 Test Result

5290 MHz Radar Type 0	Master-AP
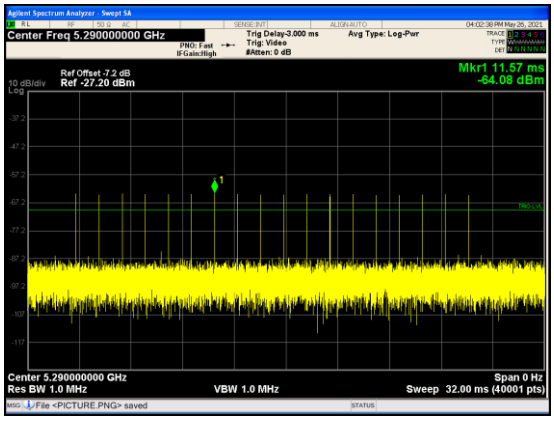	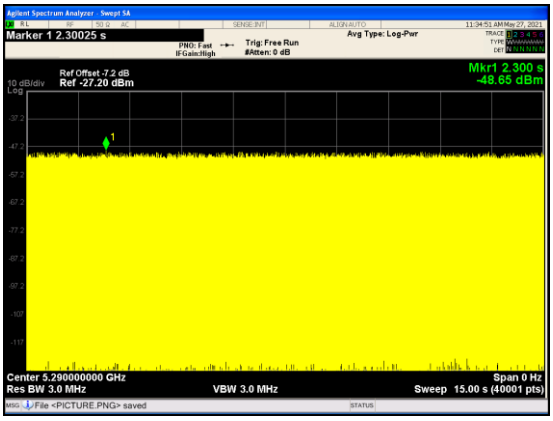
Slave-EUT	**Noise Floor**
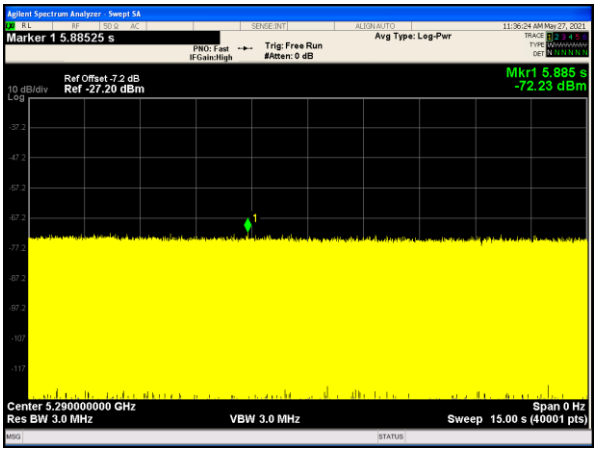	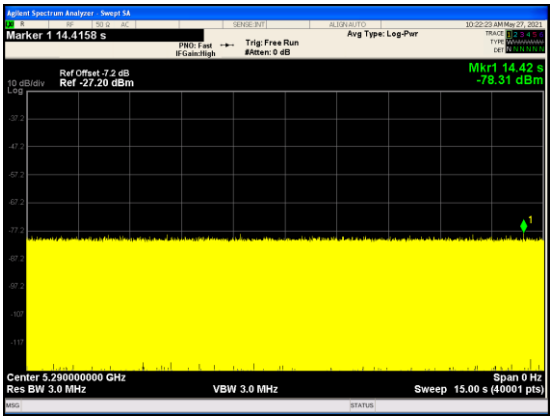

6 Channel Move Time and Channel Closing Transmission Time

6.1 Test Procedure

Perform type 0 short pulse radar waveform. The aggregate channel closing transmission time is calculated as follows:

Aggregate Transmission Time = N*Dwell Time

N is the number of spectrum analyzer bins showing a device transmission Dwell Time is the dwell time per bin (i.e. Dwell Time = S/B, S is the sweep time and B is the number of bin, i.e. 10000)

6.2 Test Result

Test Frequency (MHz)	Bandwidth (MHz)	Radar Type	Results
5290	80	Type 0	Compliance

Channel Closing Transmission Time & Channel Move Time Result							
Modulation Mode	Freq. (MHz)	Radar Type	Channel Closing Transmission Time			Channel Move Time	
			Time 0~0.2s	Time 0.2s~10s	Limit	Movie Time in 0s-10s	Limit
VHT80	5290	0	200 ms	2.2499 ms	200 ms + 60 ms	0.4417 s	10 s
Total 40000 point in 0-15.01s							

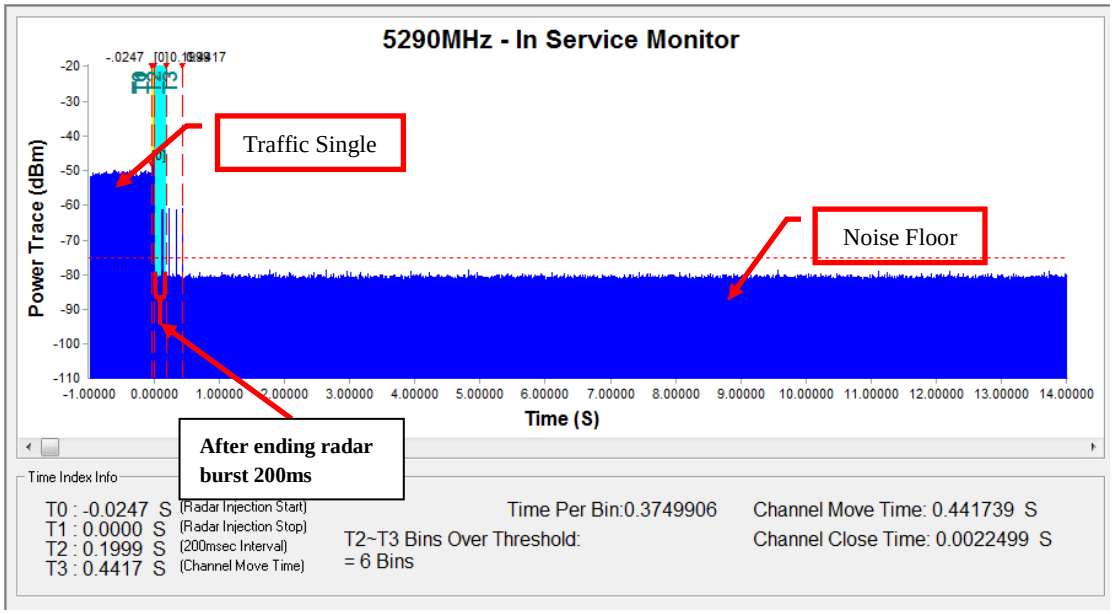

Zoom-in

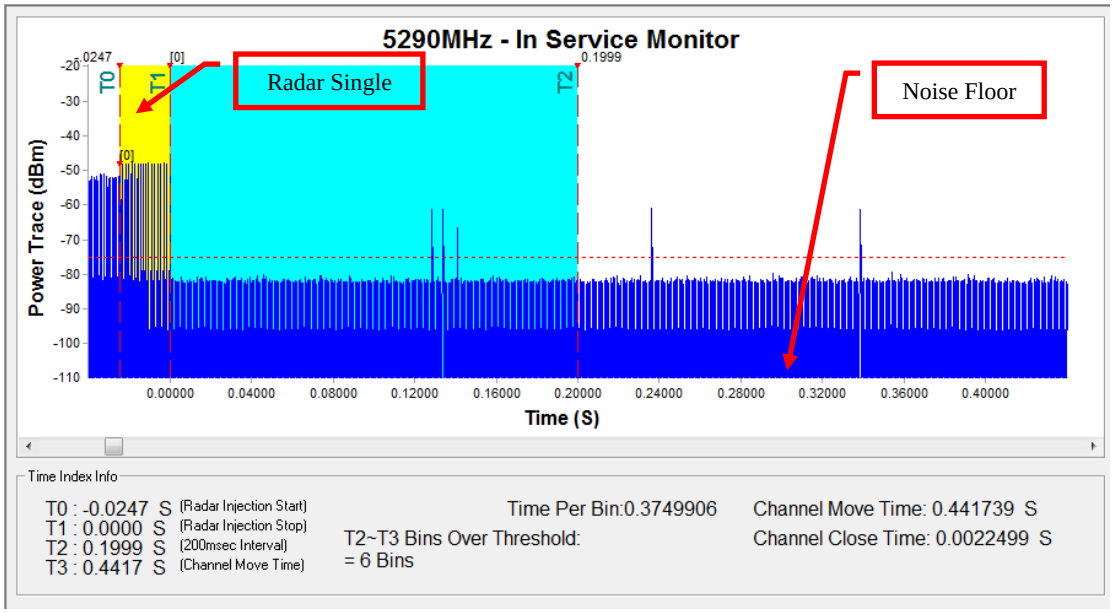

7 Non-Occupancy Period

7.1 Test Procedure

Measure the EUT for more than 30 minutes following the channel close/move time to very that the EUT does not resume any transmissions on this channel. Provide one plot to demonstrate no transmission on the channel for the non-occupancy period (30 minutes observation time).

7.2 Test Results

Non-Occupancy Period Result				
Modulation Mode	Freq. (MHz)	Non-Occupancy Period		
		Measured	Limit	Result
VHT80	5290	2 Ks	30 min	PASS

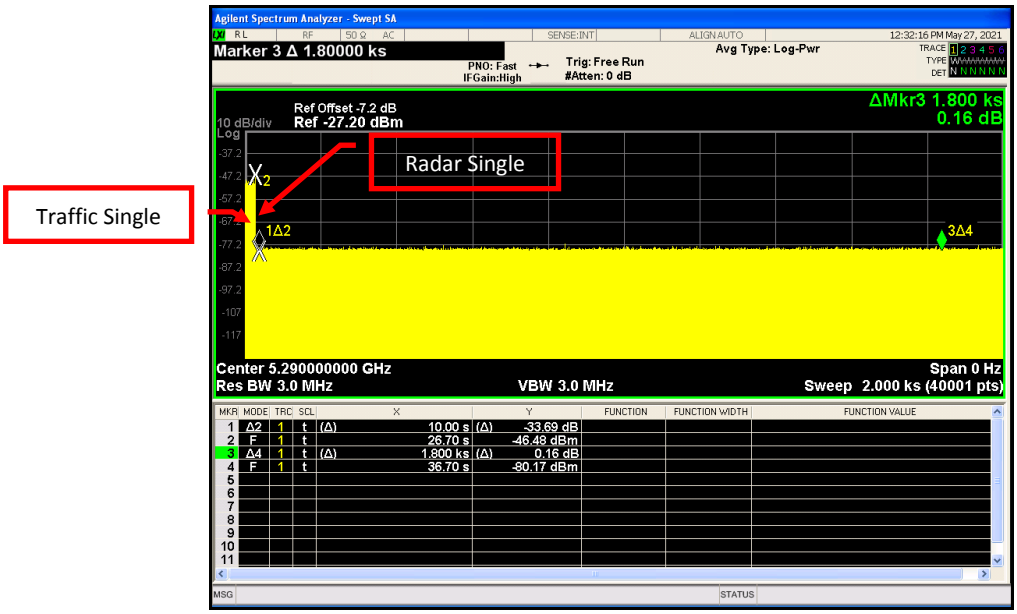

******* END OF REPORT *******