CATEGORY GUIDE

(Ⅰ) Reminder Before Use
(Ⅱ) Main Components
(Ⅲ) Received Package
(Ⅳ) Assembly Guide
(Ⅴ) Operation
※The most energy-saving operation
(Ⅵ) Recharge and Replacement of Cell
(Ⅶ) Warning
(Ⅷ) Primary Specification

1 (Ⅰ) REMINDER BEFORE USE

Please make sure that you read through the "DIY User Instructions" carefully before you install and use the product correctly. Please also keep these instructions properly so that you can confirm any areas that are unclear to you while in use.

2 (Ⅱ) MAIN COMPONENTS

(Figure -A)

3 (Ⅲ) RECEIVED PACKAGE

Placement and production are pending package design.

(Figure-B)

Product Contents

①Display (including a lithium cell cartridge)
②Controller
③Brake sensor
④AAx3 cell cartridge
⑤Hanging part cover

No.	Name	Quantity(sets)
1	Display	1
2	Controller	1
3	Brake sensor	1
4	AA×3 cell cartridge (optional)	1
5	Hanging part (cover)	
5-1	Hanging block +6°	1
5-2	Wedge block L (top and bottom make a pair)	1
5-3	Wedge block XL (top and bottom make a pair)	1
5-4	Diameter block 25.4Φ	1
5-5	Diameter block 27.2Φ	1
5-6	Diameter block 28.6Φ	1
5-7	Angle adjusting block +0°	1
5-8	Angle adjusting block +2.5°	1
5-9	Angle adjusting block +5°	1
5-10	Locking nut M5	1
5-11	Flat head screw M5×38 l	2
5-12	Round head screw M5×40 l	1
5-13	Key wrench (quick assemble &reassemble)	1
5-14	Pad, Anti-Slide	1

4 (Ⅳ) ASSEMBLY GUIDE

Precautions：

⚠ It is important that you correctly install and use this product according to the up and down directions shown in the picture.

This product is for outdoor (open air) and mobile usage (such as in a bicycle, power-assisted bicycle, etc.). In order to prevent against damages in respective areas and under various types of weather conditions, possible destruction factors such as rainwater, high or low temperature (inflation and contraction), dust, statics, and vibration were considered during design. In other words, mistaken upside down placement is likely to result in soaking or immersion in water and the inability to breathe or act correctly (with the generation of Th erroneous signal) and even damage of the product.

1.Display　　2. Controller　　3.Brake sensor

STEP1. BRAKE SENSOR

Advice: Install the sensor on the same left or right brake lever as the control rear wheel (on the right for Giant and left for Merida). If the front wheel brake is controlled by a single hand, frame spinning tends to occur at the instant of the brake; it is very dangerous. Please form a habit of braking with both hands. If it happens all of a sudden, make sure that you use the rear wheel brake. Please pay attention!

(a)Assembly of the company's patented universal sensor

1.Release the brake cable wire (such as how the cable wire is usually replaced for a bicycle; it is advised to install a brake on the rear wheel.)

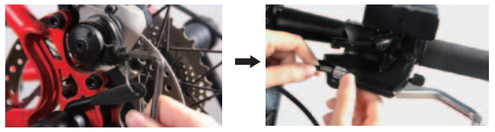

2.Place the sensor in the guide slot of the brake lever.　　3.Fasten the special screw on the sensor (turn to the left to fasten)

4.Fasten the cable wire again (in reverse to 1.)

5.Put on the outer cover and assembly of the sensor is completed.

(b)Replace the commercial brake lever with a sensor (the "brake lever")

There are multiple brands and styles available on the market, such as TEKTRO, model number:
① EL-350 (mechanical brake)
② DL-350 (hydraulic brake)

STEP2. CONTROLLER (TRANSMITTER)

Advice: Please choose according to your use habit. Place the controller to the left or right of the steering handle in order to hold the handle and turn the direction switch with your finger at the same time. (Therefore, when you make your optional purchase, please choose whether to place the direction switch to the left or right of the controller. If right and left are misplaced,
the service site may be asked to re-adjust them). The length of the connecting wire is sufficient to facilitate the installation of the sensor and the controller on the same side or separately on the left and the right sides.

Assembly：

1.Style with separate transmission and brake lever (or without transmission)
Move space available for locking between the brake lever and the transmission.
Lock the controller in between.

2.Transmission and brake lever one-piece style (for few models)
Advice: Check if there is a space in the 22.2Φ diameter available for locking the controller on the steering handle prior to purchase. Otherwise, it will be temporarily out of use. The Company will prepare the 25.4Φ and 31.8Φ styles for customers to install in the middle of the steering handle later.

STEP3. Connect to power and cover protection

After the controller is completely installed, please connect its 2P connector (female) to the 2P connector (male) of the sensor connection and properly put on the protective cover.

STEP4. Display (Receiver)

Assembly：

(Figure- C)

Confirm the up and down directions (the power button is on the right-hand side and the cell cover is on the left hand side).

1.Release the bicycle seat pipe fastening handle to pull out the seat and the tube together.

2.Refer to Table 1 below. Choose suitable matching diameter blocks and wedge blocks (or their use may be waived).

Selection criteria (①→②→③ for a set)		
① Seat tube diameter	②Wedge block size (paired A and B)	③Diameter block
31.8Φ	L	waive
30.9Φ	XL	waive
28.6Φ	LorXL	reserved for 28.6Φ
27.2Φ	LorXL	reserved for 27.2Φ
25.4Φ	XL	reserved for 25.4Φ

(Reference table 1)

3. Attach the anti-slide pad to the angle adjusting block or attach it directly onto the handling block.
(on the contact surface with the tube)

4. Insert the diameter block first into the hanging block.

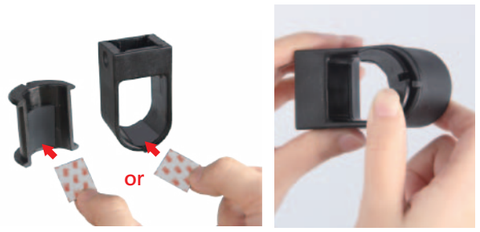

5.Then insert the seat pipe into the hanging block.

6. Insert the paired wedges (A and B) from above and below the hangling block, respectively, and use a round-head hexagon screwed socket to lock them temporarily.

7. Adjust the orientation of the hanging block (so that it is in the same orientation as the binding tenon of the display, that is, right behind the seat) and then fasten the upper and lower wedge blocks.

8. First, remove the cell cartridge cover of the display and then insert the binding tenon above it into the hanging block and fasten the flat head hexagon screwed socket before installing the cell cartridge cover back to the display. [For the options in Table (I), fastening all the way in (that is, the upper and lower wedge blocks touch each other) is fine].

9. The hanging and assembly of the display are completed.

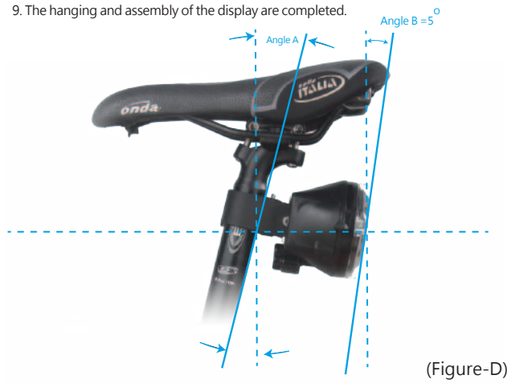

(Figure-D)

The angle A formed by the seat pipe and the vertical line of most commercial bicycles is around 11°.
For a bicycle with a different Angle A design, the "angle adjusting block" may be added to adjust the angle so that it is as close as possible.
The designed setting: The set most appropriate Angle B is 5° of the irradiation angle of the product's display.
We have +2.5° and +5° angle adjusting blocks available to be added. In addition, for +0°, when quick removal is needed to facilitate use it may be added (that is, the display may be quickly removed without removing the cell cartridge cover).

Installation：

Add the angle adjusting block between the display and the hanging block.

※Also, have a key-shaped hexagon wrench ready (to be carried around); if you are leaving the bicycle temporarily, you may remove the display and bring it with you (to prevent against theft).

(V) OPERATION

(A)Start-up

STEP1. Press and hold the power button on the "display" (Refer to Figure C). If all signals have blinked once, it means that the display is in "standby".

(Usually, if shut-down was performed before it was discontinued last time, it is required to only press and hold once. If it was not shut down last time (shut down on auto energy-saving mode), it only blinks after it has been pressed twice. Now, before STEP 2 is completed, even if any switch on the controller is ON, the display will show no signals).

STEP2. Press and hold any switch (or brake lever) on the controller and the display will show an equivalent "signal". The whole system enters the working state (ON).

Check the "blue light" for battery lower warning and evaluate if the battery power is sufficient for the current "journey." on the upper right of the transparent side of the display (next to the LED array side). There is a square tiny window (the blue light window should only be visible from rear upper right in order to avoid "confusion" with the rear signal). When battery is low (around 1/10 of the total capacity), the blinking blue light appears, meaning that it is running out of power and it is necessary to consider replacing the cell cartridge, recharging or replacing the battery in order to prevent against the impossibility to emit signals as a result of no more power available. In addition, when blue light is no longer blinking, power is disconnected and after another 10 minutes, the blue light goes out automatically, too.

(B)Operating or Working

1.The brake light automatically turns on or off simultaneously with the use (grip) of the brake lever.
2. Other signals: Manually turn the respective switches on the controller,
L (turn left), R (turn right), H (emergency), D (night light), to ON or OFF for control.

3. Sensor "signal" status of display
1-When only a single switch on the controller is ON, as expected, its shows the desired signal.
2-When multiple switches are ON, two most important "signals" will take turns to show.
Priority: S (Brake)→ H (Emergency) → L (Turn left) → R (Turn right) → D (Night light)
For more information, please refer to the specification.

P.S.： H emergency light, once in use (ON), will make it impossible to control or show the left or right turn signal (ON also becomes invalid); this feature or user habit is the same as the H (emergency) light of ordinary automobiles. Therefore, remember that it is preferred not to have the turning action once the emergency light is ON (or, it is required to turn off the H light, left, or right turn signal in order to have valid commands before turning can occur).

(C)The most power-saving shut-down

STEP1. Turn each switch on the controller to OFF first; there is no signal on the display now.
STEP2. Then, press the power button on the display. When it sounds while being pressed and no blinking sign appears, it means that the power has been turned OFF.
This completes the most power-saving shut-down.

(D)Auto shut-down of display (imperfect shut-down)

As long as no switching action (including braking) occurs on the controller for around 30 minutes, that is, the display does not receive any new instruction, the internal IC will automatically disconnect power and stop any signal. The display stops wasting power, too. If there is still any switch ON on the controller, the ON switch can still suffer minimal loss of current. If left inactive for a relatively long period of time, the life span of the cell in the controller (CR2032) will depreciate, too. Therefore, remember at all times to recover each switch on the controller to OFF while not in use.

(VI) RECHARGE AND REPLACEMENT OF CELL

(A)Display cell

There is a square tiny window on the upper right of the transparent side of the display (next to the LED array side). When the cell is about to run out (around 3.5 V). Blinking blue light begins to appear, meaning that the battery is low. If the blue light is no longer blinking, the power will be disconnected.
To remove the cell cartridge: (18650 and AA x 3 cartridges are interchangeable.)

1. Open the cell cartridge cover (it is easier to open the cover applying force as shown in the picture)

or

2. Remove the cell cartridge from the display.

(a) Recharge of the "18650 lithium cell cartridge"

Advice: Although blue light blinks up to disconnection of power, under normal circumstances, the cell may be used (for approximately another 90 minutes). In order for the cell to have a longer life span, however, as soon as you see blinking blue light, it is advised that you recharge the cell as soon as possible.
(The cell and its protection circuit have been sealed in the cell cartridge through ultrasonic processing and hence it is prohibited to dismantle the cell cartridge in order to prevent against danger.)

To recharge：

1.Use a general PC or mobile phone (excluding APPLE) USB cord to recharge
(mini USB on the one end and micro USB on the other hand)
2.Power adapter specification: DC 5V and 1A
3.During recharge, when the LED indicator turns red, it means recharge is ongoing and green means that recharge is completed.

Precautions： If the cell cartridge is to be left unused for an extended period of time (more than six months), please fully charge it first. When the 18650 lithium cell cartridge is below 3.2 V, despite the fact that the current to its internal protection circuit is disconnected, The cell itself will still have minimal "self" discharge. Therefore, the cell cartridge (below 3.2 V) that has been used up, if placed for a long time continuously, excessive self- discharge might occur to result in the impossibility to recharge the cell again and its damage.
Therefore, "remember" to recharge fully prior to long-term placement.

(b) Replacement of cell for "AA × 3 cell cartridge."

1.How to open the cell cartridge →
2.Cell specification: AA dry cell × 3
3.Please follow the "+" and "-" signs in the cell cartridge while placing in a new cell.
4. Press the cell cartridge upper cover
(a) or (b) is completed, then put the cell cartridge back to the display and shut down the cell cartridge cover (in reverse to how it was removed).

(B)Replacement of controller cell

When it is impossible to operate the display through the controller or brake lever, it means that the cell in the controller has run out of power.

How to replace the cell:

1.Turn to loose the screws and remove the cell cartridge cover.
2.Press and push out the old cell.
3.Cell specification: CR2032 x 2 , V= 3.1 V
4.Place in a new cell and press to buckle the cell cover again (with the packing inside) and fasten screws again.

Attention: There is no power switch on the controller and no pre-warning device when power is run out, either. Under normal use (all switches on the controller are "OFF" in real time prior to shut-down), it may be used for longer than approximately one year. If there is any switch that is not OFF after a shut-down (particularly in the case of a night light as it does not have a buzzer alert), despite the fact that it is shut down, the switch continues to consume power (minimally yet day and night) and power is likely to be run out early or by the end of three months. Therefore, to save trouble from frequent replacement of the cell, it is required to remember to turn OFF all switches upon shut-down.

(VII) WARNING

- Do not dump the whole 18650 cell (cartridge) in water or in a fire source as there is a concern of explosion.
- The cover is made of various types of plastics; it is preferred not to be in direct contact with chemicals such as solvents (strong acidity or base) in order to avoid melt-down.
- Do not fiercely hit plastics as damage might result.

Federal Communication Commission Interference Statement
This equipment has been tested and found to comply with the limits for a Class B digital device, pursuant to Part 15 of the FCC Rules. These limits are designed to provide reasonable protection against harmful interference in a residential installation.
This equipment generates, uses and can radiate radio frequency energy and, if not installed and used in accordance with the instructions, may cause harmful interference to radio communications. However, there is no guarantee that interference will not occur in a particular installation. If this equipment does cause harmful interference to radio or television reception, which can be determined by turning the equipment off and on, the user is encouraged to try to correct the interference by one of the following measures:
. Reorient or relocate the receiving antenna.
. Increase the separation between the equipment and receiver.
. Connect the equipment into an outlet on a circuit different from that to which the receiver is connected.
. Consult the dealer or an experienced radio/TV technician for help.
FCC Caution: To assure continued compliance, any changes or modifications not expressly approved by the party responsible for compliance could void the user's authority to operate this equipment. (Example - use only shielded interface cables when connecting to computer or peripheral devices).
FCC Radiation Exposure Statement
This equipment complies with FCC RF radiation exposure limits set forth for an uncontrolled environment. This equipment should be installed and operated with a minimum distance of 0.5 centimeters between the radiator and your body.
This transmitter must not be co-located or operating in conjunction with any other antenna or transmitter.
The antennas used for this transmitter must be installed to provide a separation distance of at least 0.5 cm from all persons and must not be co-located or operating in conjunction with any other antenna or transmitter.

This device complies with Part 15 of the FCC Rules. Operation is subject to the following two conditions:
(1) This device may not cause harmful interference, and
(2) This device must accept any interference received, including interference that may cause undesired operation.

(VIII) PRIMARY SPECIFICATION

	SPECIFICATION & PERFORMANCE	MAIN ELEMENTS: 1. Brake sensor (Or replacement with a sensor handle)	2. Controller	3. Display
A	COMMUNICATION BETWEEN ELEMENTS		↔ WIRE	↔ WIRELESS 2.4G/RF
B	INSTALLATION SITE (RECOMMENDED)	Brake lever (or replaced handle with brake sensor lever)	Steering handle	Seat pipe

C PERFORMANCE

(1) Brake light: Automatic sensor switch

Automatic sensor procedure		Light displayed
■To address situations during travel, - hold the brake lever to let the sensor intercept signals - and send them through the wire to the controller	■signals are sent (wireless) to notify the display to turn on or off the brake →	■Brake light: On or Off as soon as signals are received (Red, bright)

(2-1) Other indicators: Separate ON/OFF switches

Control switch	Light displayed
Night light (ON/OFF)	Night light (ON) (Red, slightly bright)
Left turn signal (ON/OFF)	Left turn signal(ON) (Yellow, bright, blinking, buzzer)
Right turn signal (ON/OFF)	Right turn signal(ON) (Yellow, bright, blinking, buzzer)
Emergency event warning (ON/OFF)	Emergency event warning(ON) (Yellow, bright, blinking, buzzer)

(2-2) Other indicators: When more than 2 switches are ON at the same time: Rotate to show two most important messages.
(Priority: 1. Emergency light 2. Brake light 3. Left or right turn signal 4. Night light) ◦ Example:
(a) Brake and left turn signal (rotate to blink)
(b)Brake and right turn signal (rotate to blink)
(c)Emergency light and brake light (rotate to blink).....

(3) Left and right warning lights: Left and right warning lights and left and right turn signals blink at the same time (yellow, bright, blink, buzzer)

D POWER

SPECIFICATION & PERFORMANCE	MAIN ELEMENTS: 2. Controller	3. Display	
1 CELL	CR2032*2 (Li-ion button cell/disposable)	AA*3 (Dry cell/disposable)	18650*1 (Li-ion cell/rechargeable)
2 INSTALLATION	Install directly (Seal the cell cover with screws)	Independent removable cell cartridge (choose one of the two)	
3 VOLTAGE	3.2V~2.1V	5.1V~3.2V	4.25V~3.2V
4 POWER SUPPLEMENTATION	Replacement of cell	The cell cartridge can be removed for replacement of cell.	Recharge with a USB cable Adapter (DC 5 V 1A) (The cell cartridge may not be removed to avoid danger.)
5 ENERGY-SAVING DESIGN	N/A	There is a power switch on the display. Whenever it is turned ON, it blinks (to confirm that it is ON). In addition, to extend the life span (duration of use) of the cell, if there is no variation between ON and OFF for 30 minutes, such as parking/not turned off while not in use), the power will be turned OFF automatically. To use again, simply turn on the power switch (OFF and then ON again).	
6 BATTERY LOW WARNING LIGHT	N/A	The blue LED starts to blink at around 3.5 V and remains on at 3.2 V. After around 10 minutes, it automatically goes off. It is, however, not usable below 3.2 V. (And is not bright, either)	

E WEIGHT

1. Display	Around 230 g
2.Controller	Around 104 g
3.Brake sensor	Around 32 g
4.AA x 3 cell cartridge	Around 84 g
5.18650 cell cartridge	Around 76 g
6.Hanging block (set) (OEM)	Around 70 g
---(for various DIY sizes)	Around 184 g

Total weight: On the bicycle Around 486 g
DIY pack Around 700 g (net weight)

- **Patented in multiple countries**

Invention patent number

(1)Display	US Registration No. US9,637,191 B2	To 2035
(2)Brake sensor	Taiwan Registration No. I 586575	To 2036

Utility model patent number

(1)Display	Japan Registration No. 3196434	To 2024
	Taiwan Registration No. 497130	To 2024
	Australia Registration No. 201410414	To 2022
	China Registration No. ZL2014206698489	To 2024

T-107, DR-107

BICYCLE WARNING LIGHT
DIY User Instruction manual

Product improvement, minor change is NOT changed.

BICYCLE WARNING LIGHT

TENNUS INDUSTRIAL CO., LTD.
TEL:00886-4-2371-7509