USER MANUAL

EC200-K9/EC201-M9 TWO WAY CAR ALARM

Engine start

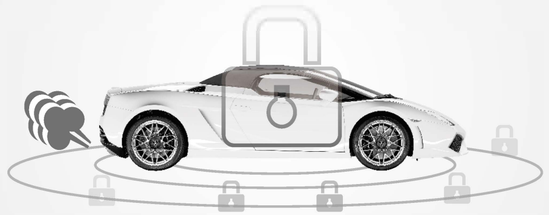

CE FC ISO/TS16949:2016

1.1 Sound /Flash Arm

After parking ,take the keys off and close all the doors ,then press the button " " to lock the door.
The LED indicator will gleam, the flash light will gleam once, the siren emits a "Bi" sound once .Then the system will be in sound / flash arm status. (shock sensor starts to work) .Then the transmitter will emit "BI" sound once. Meanwhile, the icons " " and " " "on the screen will light on, the side door icon gleam twice ,and the background light will also light on.
Press the button " " once again,the LED will flash,the flash lights will gleam once,The system enter into Sound /Flash Arm status this time(shock sensor and microwave sensor start to work).The siren will emits a sound like "Bi".Then a music sound "Do-Re-Mi" will emit from the transmitter,and the icons " " and " " will light on,side door icon will flash twice,and background light will light on.

1.2 Silent Arm

After parking ,take the keys off and close all the doors ,then press the button " " once to lock the door.
The LED indicator will gleam, the flash light will gleam once, the siren will not chirp.Then the system will be in silent arm status (shock sensor are working) .Then the transmitter will emit "BI" sound once. Meanwhile, the icons " "and " "on the screen will light on, the side door icon gleam twice.
To press " "button again, the LED light will gleam once ,flash light will gleam once.The siren will not chirp then the system will be in High-level Silent Arm Status(shock sensor and microwave sensor start to work), then the transmitter will emit "Do-Re-Mi" sound once. Meanwhile, the icons " "and " "on the screen will light on, the side door icon gleam twice.

1.3 Shock Sensor

In arm status, if shock sensor is triggered by hit first time, the siren will chirp 5 times, the flash lights will gleam at the same time and the engine will be cut off .Then the transmitter will make sound like "Bi" for 5 times with vibration for one time to remind and warn the car owner,and the shock and flash lights icon will light on at the same time.If it is triggered again by hit within 15 senconds,then the siren will chirp loudly for 30 seconds with flash lights gleaming.The transmitter will make sound like "Bi-Bi-Bi" for 30 seconds,then vibrate for 8 times,vibrating icon and flash lights icon will be light on.After alarming,the system will return to previous status.In silent arm status,the siren will not chirp,others are same as Sound /Flash Arm mode.

1.4 Microwave sensor(optional)

In arm status,if somebody or object is moving around for 5s and is detected by microwave sensor, the engine will be cut off, the flash light will not light on ,and siren will chirp 5 times to enter into first-level arm status. At this moment, the transmitter will remit sound like Bi for 5 times with vibration for one time , flash lights will gleam , to remind and warn the car owner.The icon of headlight and "[ ]"will be on,the background light will light on,the transmitter alam circularly once;
If somebody or object is moving around for 5s and is detected by microwave sensor within 15s,then the engine will be cut off,the flash lights will gleam,the siren will chirp loudly for 30seconds to remind and warn the car owner,then enter into second-level arm status.The transmitter will remit a sound like "Bi-Bi-Bi" for 30 seconds,the icon of headlight and "[ ]"will light on,the background light will light on,and the transmitter will vibrate for 8 times after alarming.
In silent arm status,the siren will not chirp,others are same as Sound /Flash Arm mode.
In disarm status, press the button" "or " "once,to set arm mode without microwave sensor working ,press the button " "or " " twice,to set arm mode with working of microwave sensor function.
If parking under raining outside,then the raining will be detected by microwave sensor and cause it to alarm.In the case,the microwave sensor should be shut down by transmitter to avoid false alarm.

1.5 Door Intruding alarm

In arm status, if car door was opened or foot brake is pressed, it will trigger system to alarm, the siren chirping for 30s,the flash light will gleam, the engine will be cut off.Side door icon and flash light icon will flash and background will light on.The transmitter will make sound as"Bi-Bi-BI"for 30s and will vibrate after alaming.The system will return to previous status after alarming.

1.6 ACC ON Triggered

In arm status, Switch ACC to ON position. The siren will chirp for 30 seconds, the flash light will flash, and the engine will be cut off, the trunk release icon and flash light icon on the transmitter will gleam, and the background light will be light on.
Meanwhile, the transmitter will sound as "Bi-Bi-Bi" for 30 seconds ,and will vibrate for 8 times after alarming.The alarm system will return to the previous status after the alarm.

1.7 Emergency Alarm

In arm status, any trigger, such as door opened, ACC ON, foot brake pressed will make siren to chirp for 30 seconds, the flash light will flash, the engine will be cut off in this situation. Meanwhile, the side door and trunk icon will blink on screen of the transmitter, and background light will light on. the transmitter will emit a sound "Bi-Bi-Bi"for 30 seconds or vibrate several times and will start to vibrate for 8 times after alaming. The system will return to the previous status after alarming. If the vibration is triggered in Emergency alarm status simultaneously, the vibration icon will be on screen and background light will light on.
Note: No matter what kind of alarm triggering, the engine will be cut off for 40 seconds. The alarm system will return to the previous status after alarming. In arm status,the alarm can be triggered since the same reason. If the sensor detected a reason that triggering alarm constantly, the system will alarm for 4 minutes, and then will stop automatically. All sensors will restart to detect when other sensors are triggered, but still can detect the trigger reason.If still detected another reason that is triggering alarm constantly ,it will alarm another 4minutes

1.8 Siren Pause

In arm status ,press the button " " or " "to pause siren chirp . Meanwhile, the arm system will return to previous status , and two transmitters will also stop alarming.

1.9 Disarm

In sound /flash arm status, press the button " "once to unlock doors, flash lights will gleam twice, the siren will chirp twice, then return back to the disarm status. The transmitter will emit a sound "BI.BI" twice, the side door icon will be on for roughly 5 seconds, and the icon " "will also be on at the same time, background light will light on.
When disarm in silent arm mode, except the siren will not chirp, other functions are same as the sound/flash mode.

1.10 Remote trunk release

When engine is cut off, keep pressing the button " "and " "simultaneously for one second or more to release the trunk (A trunk release motor must be fitted for this trunk) .Three Twitter sound will emit from the transmitter, then the trunk release icon will light on for 5 seconds after gleaming three times, and background light will light on to remind the trunk release successfully.
In arm status, the shock sensor will not be triggered to alarm,but side-door triggering,foot press triggering,and ACC triggering will make system to alarm.

1.11 Anti-hijacking

When driving, keep pressing the button " "for 2 seconds or above to enter into Anti-hijacking function , the light will flash urgently, the siren will chirp loudly and flash light will flash. the engine will be cut off automatically after 20 seconds ,only press the button " "can disarm.

1.12 Door opening flash lights setting

Switch ACC to ON position, keep pressing the button for 2 seconds, the siren will chirp twice to set door open with flash lights function. Keep pressing the button " "for 2 seconds to cancel this function, the siren will chirp once.
(Note:Factory default setting is on)

1.13 Emergency Disarm

Two Methods：
Fist Method:Open the door,and keep pressing the footbrake,then switch the key From OFF to ON position ten times.Then keep it on the On position for 2s or bove at last time.The system will diarm,and enter into emergency disarm status;Can not set arm again unless remove this status.At the moment,press" "botton on transmitter can remove this status or match another transmitter to remove this status after code learning.
Second Method:Switch the ACC from OFF to ON position and then press reset button once to disarm the system and enter into Emergency Disarm status.Car owner cannot set arm unless cancel this function.
Press the button " " can cancel this function or change other transmitter and proceed learning code to cancel this function.

1.14 Alarm reminding and auto-alarm

After parking and cutting off engine, the owner closed the door and left the car after 8 seconds, the siren will make a sound "be …… "be" three times to remind to set the alarm, the transmitter will alarm with vibration ,the icon " " and " " will gleam alternately for 5 seconds to remind owner setting alarm. If not alarm within 30 seconds, the arm system will turn into the silent arm status (please set Auto-alarm on transmitter) the door will not lock and the icon " "will blink 5 seconds and then the icon enter into " ", and "AUTO-ALARM " icon will be on with music.
When set AUTO- Alarm on transmitter, after parking and engine cut off, owner close the door but not arm, owner can press the button " " twice within 5 seconds to disarm the system completely before the Auto-Alarm system working.

When in AUTO-ARM status, press the button " " once, and without opening the door, pressing foot brake and switching ACC to on, it will return to arm status and lock.
Note: 1. If the system remind you to wait, the door is opening or Switched ACC to on position ever, Auto-Arm system will not work.
2.If car doors was opened at one time, it will be Auto-Arm system once the car door closed.
＊Auto alarm option method＊:
In disarm status,switch the car key to ON position,and press the reset button for 5 seconds.The siren will chirp for 2 times.The auto-arm system function is activated.And keep pressing the reset button for 5 seconds ,the siren will chirp once.The auto-arm system function is cancelled.
(Note:The factory default setting is ON)

1.15Reminding close the door

In arm status, if the door close improperly, the siren will chirp once and the flash light will gleam three times to remind the owner to close the door after 8s. The transmitter will emit a sound "Bi-Bi" or vibrate 5 times to remind the owner. And the side door icon will gleam, the background light will light on o remind the owner close the door. Car owner should disarm first, and close the door and then set the system into arm status. If not close the door well after 48 seconds, the siren will chirp, the flash light will gleam simultaneously. The side door icon and flash light icon on transmitter will gleam for 30 seconds, the background light will light on. And transmitter will make a sound like "Bi-Bi" for 30 seconds and vibrate 8 times after alarming .If still not close the door well after brain unit and flash/sound alarm for one cycel, then the main unit and transmitter will stop alarming only disarm or close the door well. After 4 minutes will stop alarming (Other triggers are still be in detect) .

1.16 Re-arm(Anti-false disarm)

In arm status, if press the button " "to disarm but car door is not opened within 25 seconds. the system will rearm automatically by itself as it is regarded as false disarm. And the door lock sound will come from the transmitter and the transmitter will vibrate once to remind the owner that system is in arm status. It will emit a"Du"sound in the flash/ light arm status , and it won't sound in silent arm status.
In arm status, press the button " "to disarm, if detect out the door opened in 0.5 seconds after being locked (the dome light will be lighted up). If detect out the ACC or footbrake is not triggered within 55 seconds, the system will regarded it as false disarm and return to previous arm status automatically. It will emit a door lock sound to remind owner the system in arm status.

1.17 Central door locking automation

Driving for 15 seconds then pressing the footbrake, the central door locking system will lock automatically;
While the system will unlock automatically when the engine is cut off.
If the car door not closed well, after driving for 15s if press the footbrake ,the main unit will remind the driver with a sound "DU" and flash light will gleam once. The system will not lock the door if the door not closed well at this moment. After another 15s press the foot brake ,main unit will also emit a sound "du"once, and the flash light will gleam once at the same time. When close the door well and press the foot brake after 15s, the central door lock will lock automatically.
When driving: Press the button " " will lock the car, and press the button " "will unlock the car.

1.18 Remote engine start

In arm status,press the button" "for at least 3s to start the engine.A beep sound emits from the transmitter for reminding which means the engine is started successfully.It should be operated in neutral position and hold the brake.
A.Once the engine has been started,the icon" "and "START"will blink at the same time,the air conditioner will work after 15s,the car will be warming-up for 12 minutes;After 12 minutes,the engine will be cut off automatically and back to previous status；During the warming-up,press the button " "for 3s again,it will cut off the engine and return to previous arm status.A beep sound will emit from the transmitter for reminding.
B.When car is warming up, press the button " "to unlock for driving and turn the car key to ACC ON within 30s,otherwise it would return to previous arm status.
C.If it is failed to start the engine,the system will return to previous arm status.
Note:This function will not allow to be activated if the hand brake handle is not held on and it should be operated in neutral position.To remind the user,the siren will sound 3 times and flash lights will flash for 3 times.Then it will rearm.
The company will not responsible for any accident if the car is not operated in neutral position and held on the handbrake.

1.19 Timer Engine Start

In arm satus,when you set the timer engine start,the icon "START"will light on.The engine will be started automatically when time is up.A beep sound will emit from the transmitter to remind.Please make sure that it should be operated in neutral position and the hand brake is held on.
A.Once the engine has been started,the icon " "and"START"will gleam at the same time ,the air conditioner will work after 15s,the car will be warming-up for 12 minutes；After 12 minutes,the engine will be cut off automatically and back to previous status；During the warming-up,press " " button for 3s again,it will turn off the engine and return to previous arm status.A beep sound will emit from the transmitter for reminding
B.When car is warming up.press the button " " to unlock for driving and turn the car key to ACC ON within 30s,otherwise it would return to previous arm status.
C.If it is failed to start the engine,the system will return to previous arm status.
Note:This function will not allow to be activated if the hand brake handle is not held on and it should be operated in neutral position.To remind the user,the siren will sound for 3times and flash lights will flahs for 3 times.Then it will rearm.
The company will not responsible for any accident if the car is not operated in neutral position.

1.20 Temperature display in the car

a.Every time you arm or disarm the car ,the transmitter will display the temperature in the car and then change to lock.
b.When starting successfully,the transmitter will display the temperature and time remaining alternately.

1.21 Car finding

If the car owner doesn't know where is the car:
Keep pressing the button " "for 2s, the siren will chirp for 10s at the moment,and the flash light will gleam at the same time. Remind owner the car position with sound/ flash.
Keep pressing the button " "for 2s, the flash light will gleam for 10s but without siren chirping。Remind owner with flash
No matter the main unit remind with sound / flash or flash, press any button will stop car reminding.

1.22 Power off memory

In case the system is powered off, the setting status will be recovering once powered on.

1.23 Window roll up automation

When in sound/flash arm status,silent arm status or Auto-arm status, the power window lifting s lifting signal will output for 20s.

1.24 LED indicator

In arm status, LED light will gleam 2 times every 2s to remind the owner and warn others that the car is in arm status. If the alarm is triggered by hit or microwave, the LED will gleam quickly and constantly when in arm status. The LED will gleam 4 times every 2s after the alarming to remind the owner of alarm being triggered before. It will stop until disarm and tum ACC to on position. If alarm system is triggered by door opening, ACC ON ,or foot brake pressing, the LED light will gleam quickly and continuously until disarm and switch ACC to ON position.

1.25 Triggering Memory

In arm status, if the system triggered to alarm, the triggering information would be recorded. When disarm and open the door, the main unit will emit a sound to remind car owner to check the car since the alarm was triggered .Turn ACC to ON, the LED light will stop gleam.
A.Alarm triggered by hit, to remind the car owner, the siren will sound like "Du-Du" twice .The siren will not chirp if it is in the silent arm status. LED light will gleam to remind the owner of alarm being triggered by hit and to check the vehicle. Switch ACC to ON position, LED light will stop gleam.
B.Alarm triggered by side door openning , ACC, foot brake the siren will emit sound "Du-Du-Du-Du" for four times, LED light will gleam continuously remind the car owner to check vehicles.The LED will stop gleam until turn ACC turns on.。
When system disarmed , the car owner opens the door ,the triggering memory will remind the car owner that the alarm system was triggered. If ACC ON, it will delete the triggering memory.(when it is disarmed without ACC on, open the door two times, every time will trigger to alarm, and then the memory will be deleted except the LED indicator.)

1.26 Power status reminding

When battery power is low, press any button on the transmitter to finish corresponding action, it will emit a warning tone to remind the battery power is low. Meanwhile, the battery icon will show the corresponding electric quantity. There are total four bars, if have four means full power; if the battery icon only have the frame means that need to exchange. When not press the button, sensor will detect the battery at any time.

If the sensor detected that the battery power is low , it will show the remaining bars only without warning tone.
Note：When Battery is low，it will affect the control distance.

1.27 Electrical / pneumatic locking

There is a switch "J1" on the transmitter, shift it to the "electrical power lock" position, press the button" " or " ", lock or unlock time is 0.5s. The car should be fitted with Electric lock.
When shift it to the " pneumatic lock" position, press the button " "or " " to lock or unlock lock and unlock time is 3.5s .The car should be fitted with pneumatic lock. It's according to the vehicle mode.
Note: The system default setting is Electrical lock.

1.28 TIME、AUTO-ARM、shock setting

◎Keep pressing the button " " and " "for 1 second simultaneously to enter into the setting mode, the transmitter will sound once and " " will gleam at the moment.
◎Then press the button " " to switch settings (times/minute, time/hour,Alarm clock on/Off, Alarm clock /Minute, Alarm clock /Hour,and AUTO-ARM on/off)circularly. Corresponding icon will flash.
◎Press the button " "to adjust the setting data, then press the button" " for the next setting adjustment. Press the button " " and " " at the same time for 1 second can save the setting mode and then exit the setting.If press the button" ",the setting will not be saved.
parameter setting:
◎Time: hour and minutes setting.
Alarm:To set the alarm clock on/off,hour,munite; When the alarm ringring, the alarm clock icon will gleam and the background light will light on.
◎AUTO-ARM：Set the the system arm automatically, ON means arm automation will work when the car door close well on roughly 1 minutes. OFF means the arm automation will not work when the door close well on roughly 1 minutes.
◎Auto-alarm:to set the system enter in to arm status automatically.
◎Exit: press the button " " and " "simultaneously, then save and exit the setting mode. The transmitter will emit a warning sound and then return back to standby mode and time display.

1.29 Background light

Press the button " " and " "once simultaneously, the background light will ligt on for seeing the time on screen at night easily.

1.30 Valet/service mode

1.Switch ACC to the ON position, keep pressing "setting" button for 2s , the transmitter will emit a sound "Bi". After 5s, then press the mute button, a sound "Bi" from siren remind the valet mode has been activated, and the LED indicator will be on all the time.(When the valet mode is activated ,the transmitter can open or close the door, no matter if the ACC switch on or not. If use transmitter to release the trunk, other functions will be shield)
In valet mode, then keep pressing "setting" button for 2 seconds ,the siren will chirp 2 times,LED indicator will off to remind valet mode has been exited successfully.
2.Switch ACC to the ON position, press reset button for 5 times , the siren will chirp once the LED indicator will be on all the time to remind the owner the valet mode is activated succefully.In valet mode,press reset button 5 times,the siren will chirp 2 times,the LED indicator will be off to remind valet mode has been exited successfully.((When the valet mode is activated ,the transmitter can open or close the door, no matter if the ACC switch on or not. If use transmitter to release the trunk, other functions will be shield)
(Note:The factory default setting is OFF)

1.31 Turbo timer mode

After driving, hold the hand brake, and take off the car key, the system will enter into turbo timing mode automatically; the engine running for 2 minutes, at this time, if open the door and close again, the system will exit exit or you can press the button " " for 2s to exit directly.
When parking and take away the key then open and close door, ,if the system is in disarm mode, open the door again the system will exit the turbo timer mode, at this time, start the engine by remote, the siren will chirp 5 times and flash light gleam 5 times.
Turn the car key to ACC ON position, press the button and at the same time to open or close the turbo timing mode. If the siren beep once which mean active the turbo timer function The default setting is OFF .

1.32 Door detecting and dome light delay

1.When press the button to enter into arm status, if detected the side door closed improperly, the system will remind every 8s. If detected the door still not close well, the system will remain detecting till 45s. After 45s, it will alarm directly if the door still closed improperly. If detected the door closed well at any time within 8s to 45s, the system will enter into arm mode. The prompt is just limited to the first 8 seconds only, and 9 to 45 seconds won't remind.
2.Press unlock button in auto-arm status, the system will detect for 0.5s。If a signal output from the side door (the system can identify if the car is fitted with dome light), will enter into arm status after 55s. If there is no signal output from the side door, the system will identify that there is no dome light function. After 25 seconds, the system will enter into the arm status .

1.33 Code learning

Method1: Keep pressing the footbrake,and switch the key to ON position for 8 times.Then keep it in ON position in the eighth. LED light will light on. Then press any button on the first transmitter within 8s, LED indicator will gleam, and the siren will emit the "du" sound twice. The transmitter will respond with music, that means the code learning for the first transmitter is successful. Press any button on the second transmitter within 8s, the LED indicator will gleam ,the siren emit a"du" sound 4 times, and the transmitter will respond with music,that means the second transmitter code learning is successful. One brain unit only can match two transmitters.Take off the key afterting code learning.

Method 2: Keep pressing the code learning button, LED light will light on. Then press any button on the first transmitter, LED indicator will gleam, and the siren will emit the "du" sound twice. The transmitter will respond with music, that means the code learning for the first transmitter is successful. Press any button on the second transmitter within 8s, the LED indicator will gleam ,the siren emit a"du" sound 4 times, and the transmitter will respond with music,that means the second transmitter code learning is successful. After leamin,g loosen the button. One unit only can match two transmitters.

Wiring Diagram

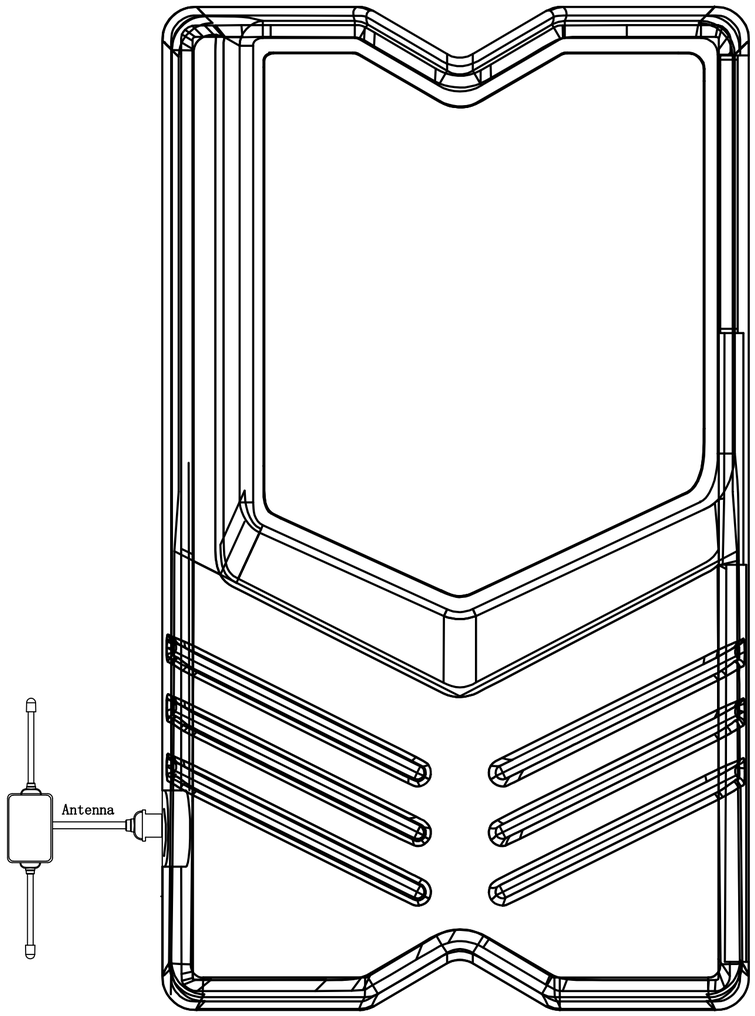

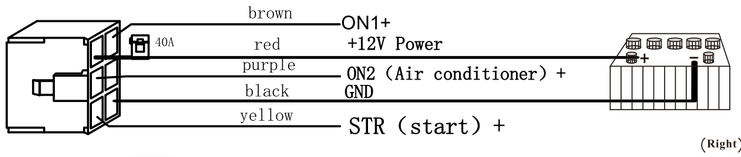

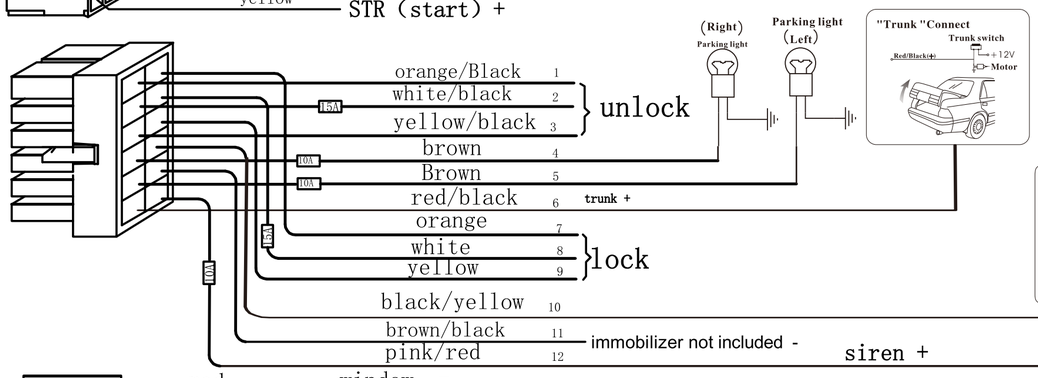

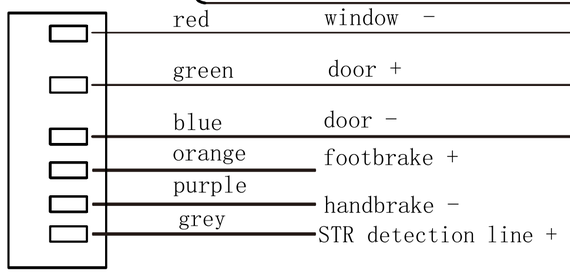

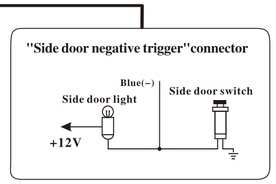

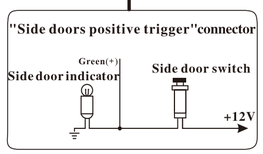

Auxiliary signal negative output
This wire can connect to Transponder bypass or power window control.

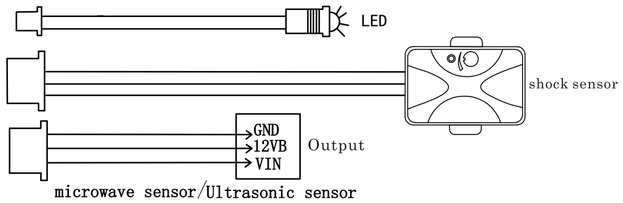

reset switch installation

The **reset switch** should be installed into the driving cab where can not easy to be found. This is for emergency reset and function programming.

Central locking diagram

Central door lock diagram

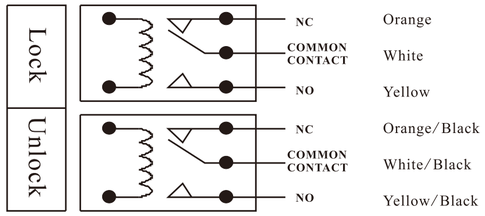

Central locking positive /negative wiring diagram

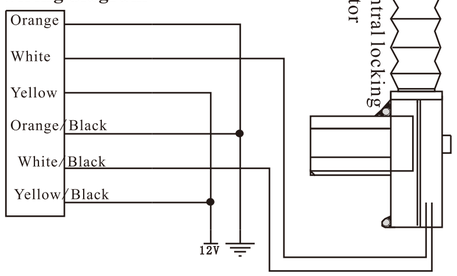

Central locking negative wiring diagram

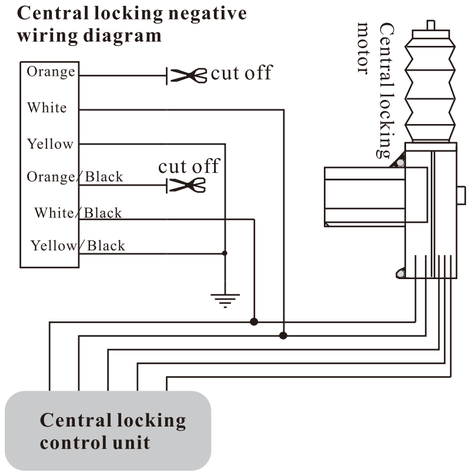

Central locking positive wiring diagram

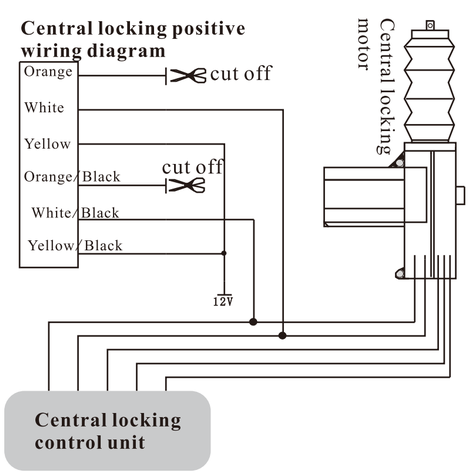

Pneumatic lock trigger wiring diagram

Vehicle: AUDI, BENZ

Please open the main brain and choose the central door lock time: 3.5S

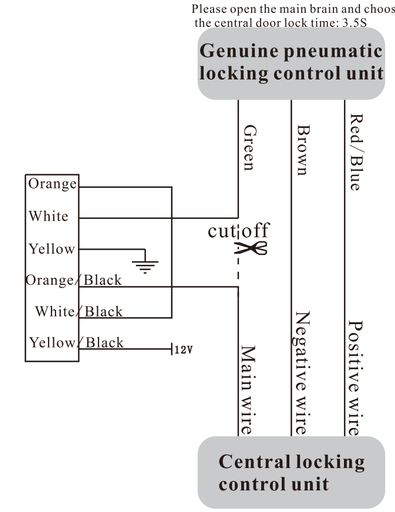

40107900040

FCC Statement

This device complies with part 15 of the FCC rules. Operation is subject to the following two conditions: (1) this device may not cause harmful interference, and (2) this device must accept any interference received, including interference that may cause undesired operation.

Changes or modifications not expressly approved by the party responsible for compliance could void the user's authority to operate the equipment.

NOTE: This equipment has been tested and found to comply with the limits for a Class B digital device, pursuant to part 15 of the FCC Rules. These limits are designed to provide reasonable protection against harmful interference in a residential installation. This equipment generates uses and can radiate radio frequency energy and, if not installed and used in accordance with the instructions, may cause harmful interference to radio communications. However, there is no guarantee that interference will not occur in a particular installation. If this equipment does cause harmful interference to radio or television reception, which can be determined by turning the equipment off and on, the user is encouraged to try to correct the interference by one or more of the following measures:

- Reorient or relocate the receiving antenna.
- Increase the separation between the equipment and receiver.
- Connect the equipment into an outlet on a circuit different from that to which the receiver is connected.
- Consult the dealer or an experienced radio/TV technician for help.

The device has been evaluated to meet general RF exposure requirement. The device can be used in portable exposure condition without restriction.