ISRAEL TESTING LABORATORIES
Global Certifications You Can Trust

ACCREDITED
TESTING Cert No.1152.01

DATE: 6 April 2020

I.T.L. (PRODUCT TESTING) LTD.

FCC Radio Test Report

For

A.R.I. Flow Control Accessories LTD

Equipment under test:

ARISense Smart Air Valve System

Partner Unit

Tested by: _____
M. Zohar

Approved by: _____
D. Shidlowsky

This report must not be reproduced, except in full, without the written permission of I.T.L. (Product Testing) Ltd.
This report relates only to items tested.

ISRAEL TESTING LABORATORIES
Global Certifications You Can Trust

Measurement/Technical Report for

A.R.I. Flow Control Accessories LTD

ARISense Smart Air Valve System

Partner Unit

FCC ID: 2ASHC-ARISENSE-P19

This report concerns:	Original Grant: X Class II change: Class I change:
Equipment Class:	TNB – Licensed Non-Broadcast Station Transmitter
Limits used:	47CFR Parts 2; 90

Measurement procedure used is ANSI C63.26-2015

Substitution Method used as in ANSI TIA-603-E (2016)

Application for Certification prepared by:
R. Pinchuck
ITL (Product Testing) Ltd.
1 Bat Sheva St.
Lod 7120101
Israel
E-mail: rpinchuck@itl.co.il

Applicant for this device:
(different from "prepared by")
Amir Chapnick, R&D Engineer
A.R.I. Flow Control Accessories LTD
Kfar Haruv
Golan Heights, 1293200, Israel
Tel: +972 4-676-1786
Email: chapnik@ari.co.il

TABLE OF CONTENTS

1. GENERAL INFORMATION ---------- 5
1.1 Administrative Information 5
1.2 List of Accreditations 6
1.3 Test Methodology 7
1.4 Product Description 7

2. SYSTEM TEST CONFIGURATION ---------- 8
2.1 Justification 8
2.2 EUT Exercise Software 8
2.3 Special Accessories 8
2.4 Equipment Modifications 8
2.5 Configuration of Tested System 9

3. TEST SET-UP PHOTOS ---------- 10

4. RF POWER OUTPUT ---------- 14
4.1 Test specification 14
4.2 Test Procedure 14
4.3 Test Limit 14
4.4 Test Results 14
4.5 Test Equipment Used; RF Power Output* 16

5. OCCUPIED BANDWIDTH ---------- 17
5.1 Test Specification 17
5.2 Test Procedure 17
5.3 Test Limit 17
5.4 Test Results 17
5.5 Test Equipment Used; Occupied Bandwidth* 18

6. EMISSION MASK ---------- 19
6.1 Test Specification 19
6.2 Test Procedure 19
6.3 Test Limit 19
6.4 Test Results 19
6.5 Test Equipment Used; Emission Mask* 21

7. SPURIOUS RADIATED EMISSION ---------- 22
7.1 Test specification 22
7.2 Test Procedure 22
7.3 Test Limit 23
7.4 Test Results 23
7.5 Test Instrumentation Used; Radiated Measurements* 24

8. TRANSMITTER FREQUENCY STABILITY ---------- 25
8.1 Test specification 25
8.2 Test Procedure 25
8.3 Test Limit 25
8.4 Test Results 25
8.5 Test Equipment Used; Transmitter Frequency Stability* 26

9. TRANSIENT FREQUENCY BEHAVIOR ---------- 27
9.1 Test specification 27
9.2 Test Procedure 27
9.3 Test Limit 27
9.4 Test Results 27
9.5 Test Equipment Used; Transient Frequency Behavior* 29

10. ANTENNA TYPE/INFORMATION ---------- 30

11. RF EXPOSURE/SAFETY ---------- 31

12. APPENDIX A - CORRECTION FACTORS ---------- 32
12.1 Correction factors for RF OATS Cable 35m ITL #1911 32
12.2 Correction factor for RF cable for Anechoic Chamber ITL #1840..... 33
12.3 Correction factors for Active Loop Antenna 34
12.4 Correction factors for biconical antenna ITL #1356 35
12.5 Correction factors for log periodic antenna ITL # 1349..... 36
12.6 Correction factors for Double –Ridged Waveguide Horn ANTENNA..... 37

1. General Information

1.1 Administrative Information

Manufacturer:	A.R.I. Flow Control Accessories LTD
Manufacturer's Address:	Kfar Haruv, Golan Heights 1293200, Israel Tel: +972 4-676-1786
Manufacturer's Representative:	Amir Chapnik
Equipment Under Test (E.U.T):	ARISense Smart Air Valve System
Equipment Model No.:	Partner Unit
Equipment Serial No.:	Not designated
Date of Receipt of E.U.T:	January 21, 2019
Start of Test:	January 21, 2019
End of Test:	January 5, 2020
Test Laboratory Location:	I.T.L (Product Testing) Ltd. 1 Batsheva St, Lod, Israel 7120101
Test Specifications	FCC Part 2, 90

1.2 List of Accreditations

The EMC laboratory of I.T.L. is accredited by/registered with the following bodies:

1. The American Association for Laboratory Accreditation (A2LA) (U.S.A.), Certificate No. 1152.01.
2. The Federal Communications Commission (FCC) (U.S.A.), FCC Designation Number is IL1005.
3. The Israel Ministry of the Environment (Israel), Registration No. 1104/01.
4. Department of Innovation, Science and Economic Development (ISED) Canada, CAB identifier: IL1002

I.T.L. Product Testing Ltd. is accredited by the American Association for Laboratory Accreditation (A2LA) and the results shown in this test report have been determined in accordance with I.T.L.'s terms of accreditation unless stated otherwise in the report.

1.3 Test Methodology

Radiated and conducted testing was performed according to the procedures in ANSI C63.26: 2015 and ANSI/TIA-603-E: 2016, Section 2.2.12.

1.4 Product Description

A.R.I.'s ARISENSE is a Data Transmitting System that collects and transmits Air Valves' status and accessories data to a central web server.
The system provides a comprehensive view of the air valves installed at the water system pipelines.
It detects abnormal issues before they occur, notifies needs for service, significantly reduces maintenance costs and prevents fines caused by leakage, spillage, clogging, tilting, vandalism, high pressure and flooding.
ARISENSE employs a combination of sensors integrated within the air valve's housing that continuously monitor the valve's functioning and performance, and transmit the data to the web server.

2. System Test Configuration

2.1 Justification

1. The E.U.T contain an UHF 450-460MHz band transceiver.

2. Radiated emission evaluation was performed in typical installation orientation as declared by the customer.

3. The E.U.T has 4 optional valve types. Based on exploratory testing that was performed, the "worst case" valve was the CAT No. valve: D-040.

CAT No. Valve	Fundamental (dBuV/m)	2nd Harmonic (dBuV/m)
D-020	130.0	90.0
D-025L	128.8	90.8
D-025	128.4	81.8
D-040	132.1	92.3

Figure 1. Screening Results – Valve Type

4. Only for testing purposes, the E.U.T was powered from an AC/DC power supply. In operational mode, the E.U.T is only battery operated.

2.2 EUT Exercise Software

I-VE Tool via USB

2.3 Special Accessories

AC/DC adapter:
Manufacturer: Active energe
Part number: ACT 3.65-1.5
Serial number: N/A

2.4 Equipment Modifications

Initially, the E.U.T didn't meet the spurious emission requirements (-20dBm). The manufacturer took the following corrective action:
The output buffer level at the frequencies of 450.006 & 460MHz was changed to "55" buffer level.

2.5 Configuration of Tested System

Product Name	ARISense Smart Air Valve System
Model Name	Partner Unit
Working voltage	3.6VDC battery operated (Lithium)
Mode of operation	Transceiver
Modulations	GFSK
Assigned Frequency Range	450-470MHz
Operation Frequency Rang	450.006- 460.000MHz
Antenna Gain	+1.0dBi
DATA rate	N/A
Modulation BW	12.5kHz

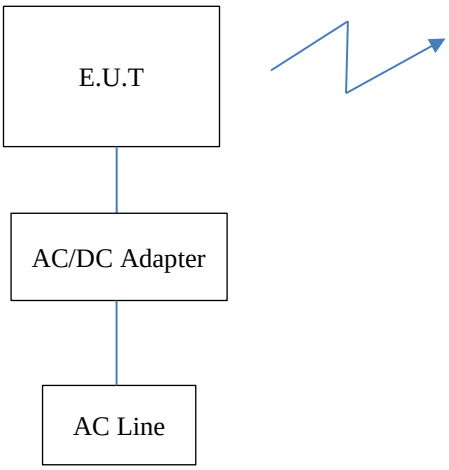

Figure 2. Radiated Test Set-Up

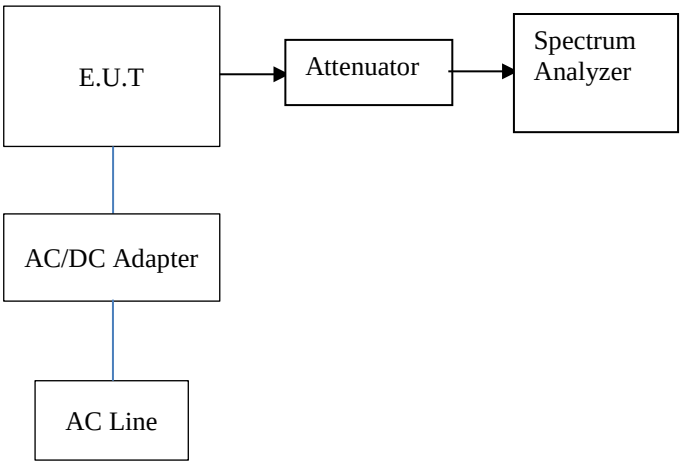

Figure 3. Conducted Test Set-Up

3. Test Set-Up Photos

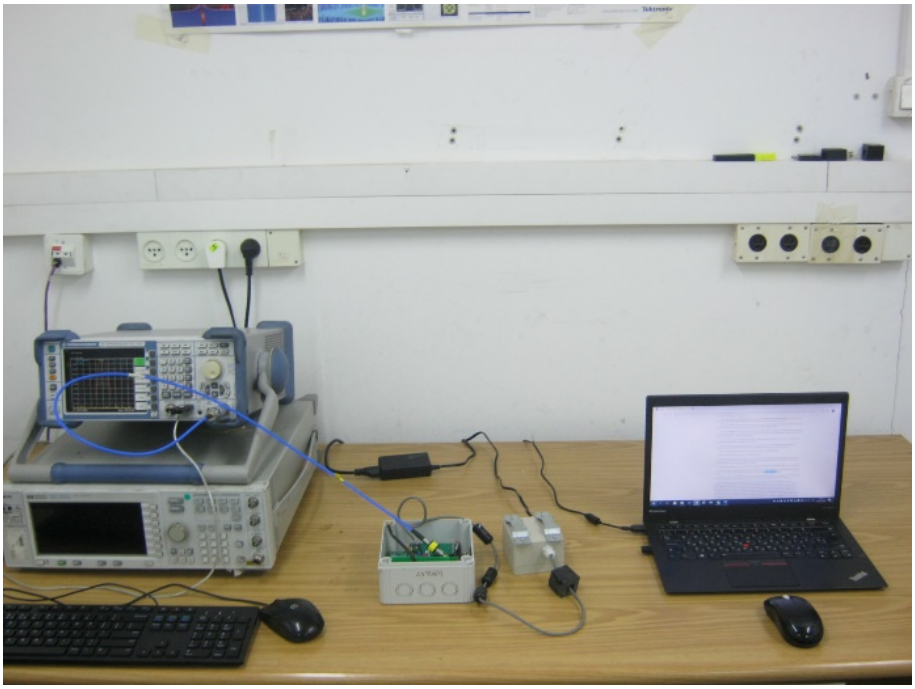

Figure 4. Mask Emission Test

Figure 5. Radiated Emission Test, 0.009-30MHz

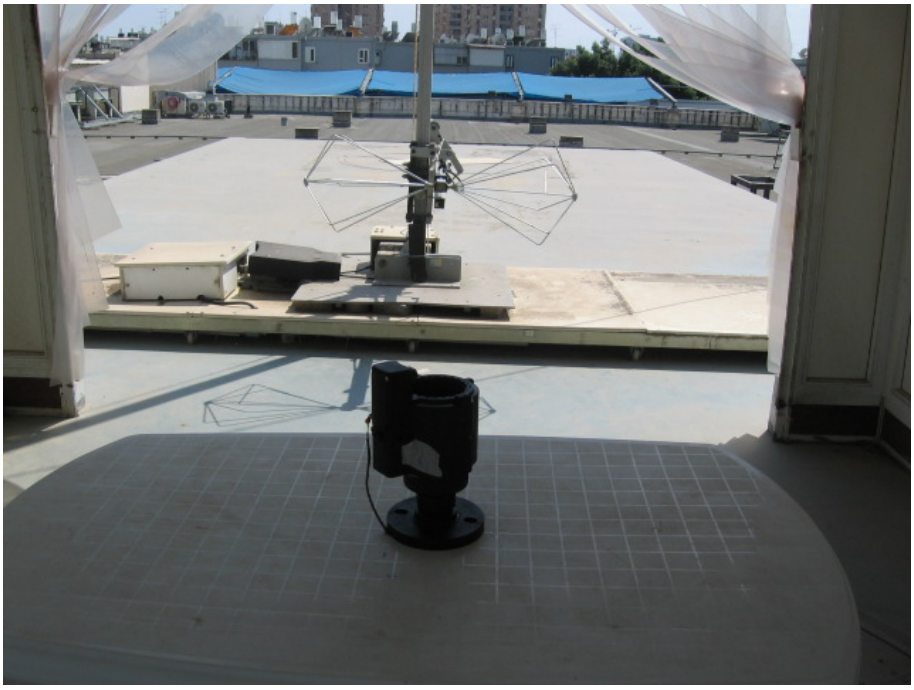

Figure 6. Radiated Emission Test, 30-200MHz

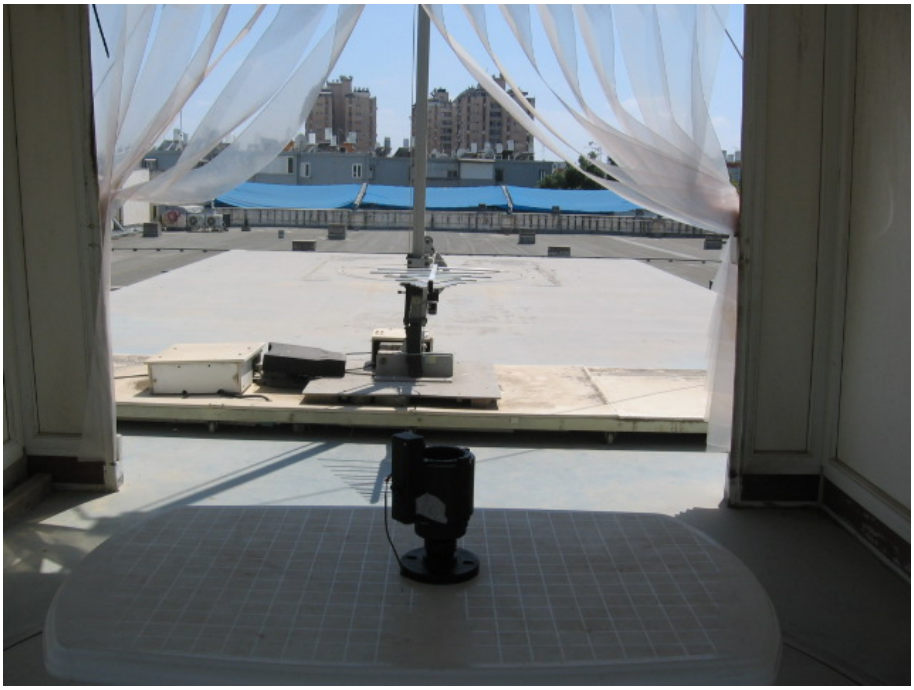

Figure 7. Radiated Emission Test, 200-1000MHz

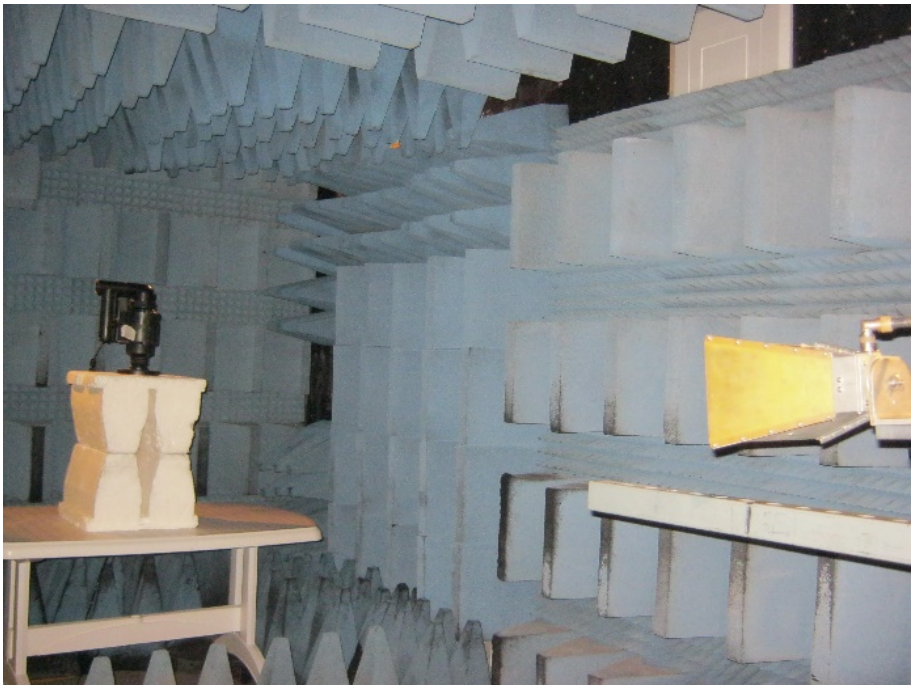

Figure 8. Radiated Emission Test, 1000-5000MHz

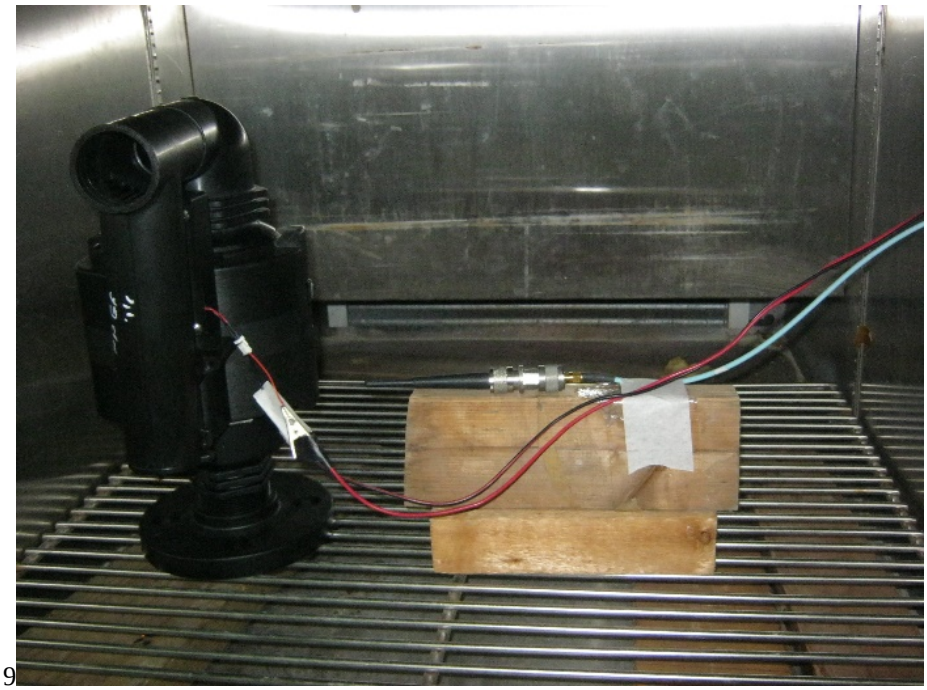

9

Figure 9. Frequency Stability Test

Figure 10. Frequency Behavior Test

4. RF Power Output

4.1 Test Specification

FCC, Part 90, Section 205(h)

4.2 Test Procedure

(Temperature (22°C)/ Humidity (52%RH))
Test method used: ANSI C63.26 (2015), Section 5.2.3.3

The E.U.T was placed on a remote-controlled turntable in the OATS.
The E.U.T was placed on a non-metallic table, 0.8 meters above the ground, at a distance of 3 meters. The readings were maximized by adjusting the antenna height between 1-4 meters, the turntable azimuth between 0-360°, and the antenna polarization.

Radiated output power levels were measured at selected operation frequencies and the results were converted to power level according to the formula as shown below:

$$P = \frac{(E_{V/m} \times d)^2}{(30 \times G)} \quad [W]$$

E - Field Strength (V/m)

d – Distance from transmitter (m)

G – Antenna gain

P – Peak power (W)

ERP(dBm)= EIRP(dBm)- 2.15

4.3 Test Limit

Maximum ERP 2W (33dBm).

4.4 Test Results

Carrier Channel	Antenna Pol.	Maximum Peak Level	Effective Radiated Power Level	Limit	Margin
(MHz)	(V/H)	(dBµV/m)	(dBm)	(dBm)	(dB)
450.006	V	122.1	24.8	33.0	-8.2
	H	112.5	15.2	33.0	-17.8
460.000	V	123.2	25.9	33.0	-7.1
	H	116.4	19.1	33.0	-13.9

Figure 11 RF Power Output

JUDGEMENT: Passed

See additional information in *Figure 12* to *Figure 15*.

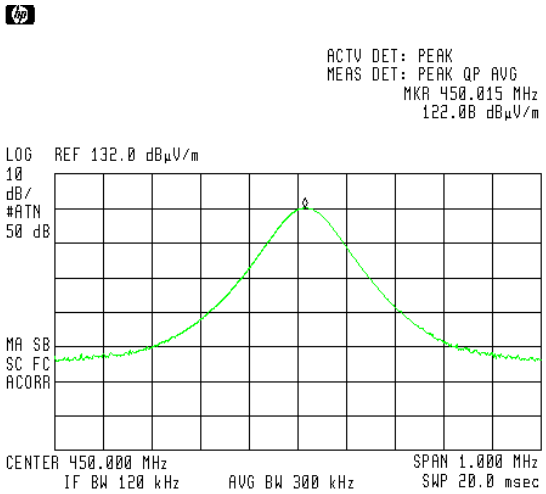

Figure 12. 450.006MHz, Vertical

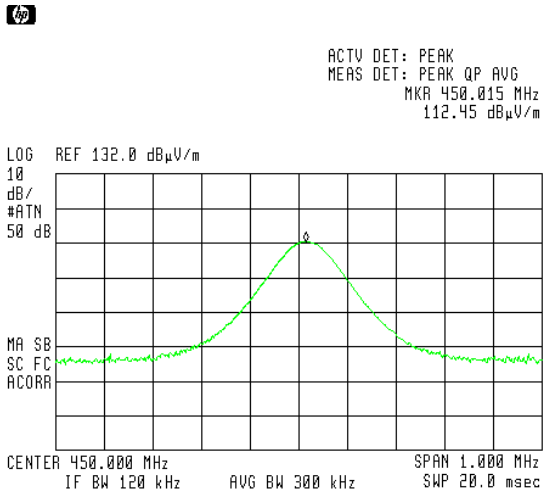

Figure 13. 450.006MHz, Horizontal

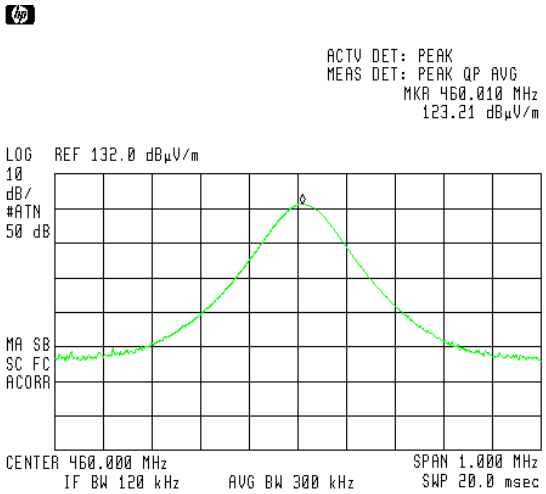

Figure 14. 460.000MHz, Vertical

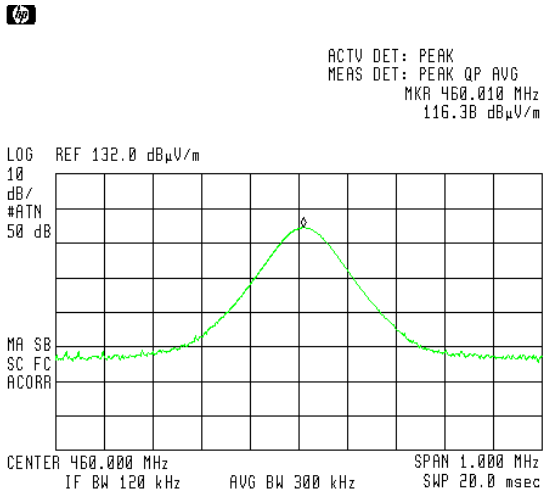

Figure 15. 460.000MHz, Horizontal

*4.5 Test Equipment Used; RF Power Output**

Instrument	Manufacturer	Model	Serial Number	Calibration	
				Last Calibration Date	Next Calibration Due
EMI Receiver	HP	8542E	3906A00276	February 28, 2019	February 28, 2020
RF Filter Section	HP	85420E	3705A00248	February 28, 2019	February 28, 2020
35m Coaxial Cable for Oats	EIM (Huber Suhner)	RG214-11N(X2) RG214/U		May 26, 2019	May 31, 2020
Antenna Log Periodic	EMCO	3146	9505-4081	May 31, 2018	May 31, 2020
Antenna Mast	ETS	2070-2	-	NCR	NCR
Turntable	ETS	2087	-	NCR	NCR
Mast & Table Controller	ETS/EMCO	2090	9608-1456	NCR	NCR

*Testing performed June 24, 2019.

Figure 16 Test Equipment Used

5. Occupied Bandwidth

5.1 Test Specification

FCC, Part 90, Sub Part I, Section 209(b)(5)

5.2 Test Procedure

(Temperature (22°C)/ Humidity (62%RH))
Test method used: ANSI C63.26 (2015), Section 5.4.4

The E.U.T. antenna terminal was connected to the Spectrum Analyzer through an external attenuator and an appropriate coaxial cable. Special attention was taken to prevent Spectrum Analyzer RF input overload.
RBW set to value between 1% to 5% from the OBW.

5.3 Test Limit

Operations using equipment designed to operate with a 12.5 kHz channel bandwidth will be authorized at 11.25 kHz bandwidth.

5.4 Test Results

JUDGEMENT: Passed

See additional information in *Figure 17* to *Figure 18.*

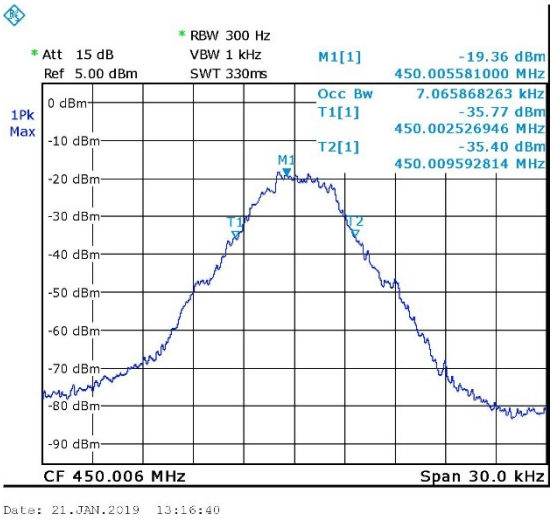

Figure 17. 450.006MHz

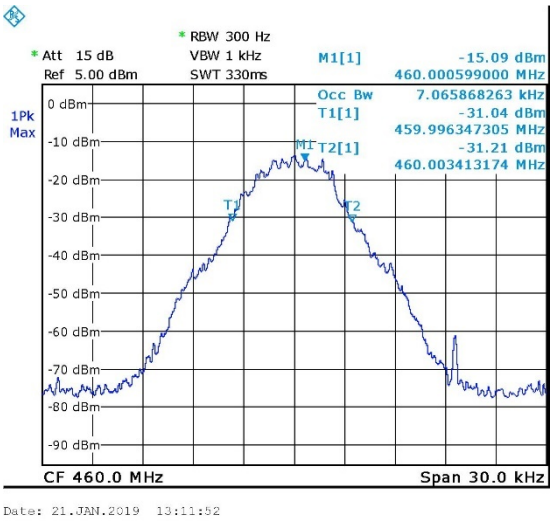

Figure 18. 460.000MHz

*5.5 Test Equipment Used; Occupied Bandwidth**

Instrument	Manufacturer	Model	Serial Number	Calibration	
				Last Calibration Date	Next Calibration Due
Spectrum Analyzer	R&S	FSL6	100194	February 19, 2018	February 28, 2019
RF Cable	EIM	705A009301 EIM		December 24, 2018	December 31, 2019
30db Attenuator	MCL	BW-S30W5	533	December 24, 2018	December 31, 2019

*Testing performed January 21, 2019

Figure 19 Test Equipment Used

6. Emission Mask

6.1 Test Specification

FCC, Part 90, Sub Part I, Section 210

6.2 Test Procedure

(Temperature (20°C)/ Humidity (62%RH))
Test method used: ANSI C63.26 (2015), Section 5.7

The E.U.T. antenna terminal was connected to the Spectrum Analyzer through an external attenuator and an appropriate coaxial cable (loss=30.5dB).

Special attention was taken to prevent Spectrum Analyzer RF input overload.
For Mask D measurements, RBW of 100Hz was used.

6.3 Test Limit

Mask D

6.4 Test Results

JUDGEMENT: Passed

See additional information in *Figure 20* to *Figure 21*.

Emission Mask

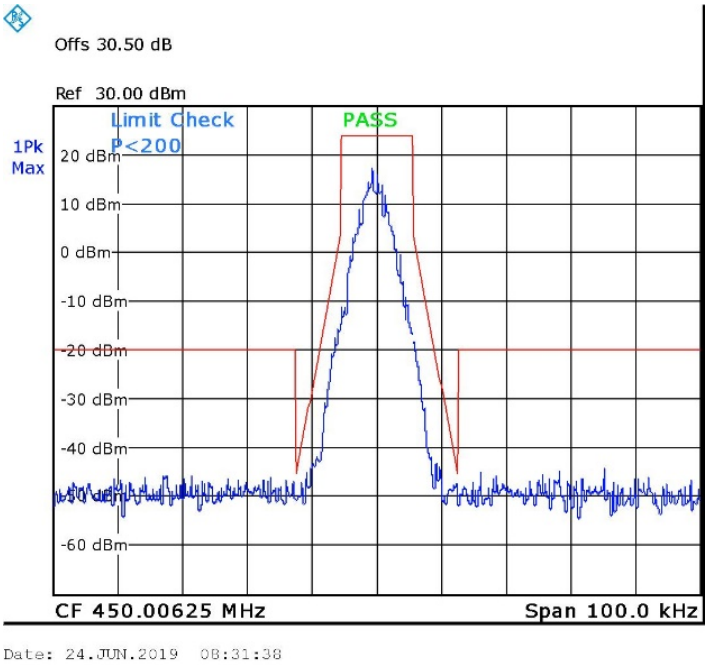

Figure 20. 450.006MHz

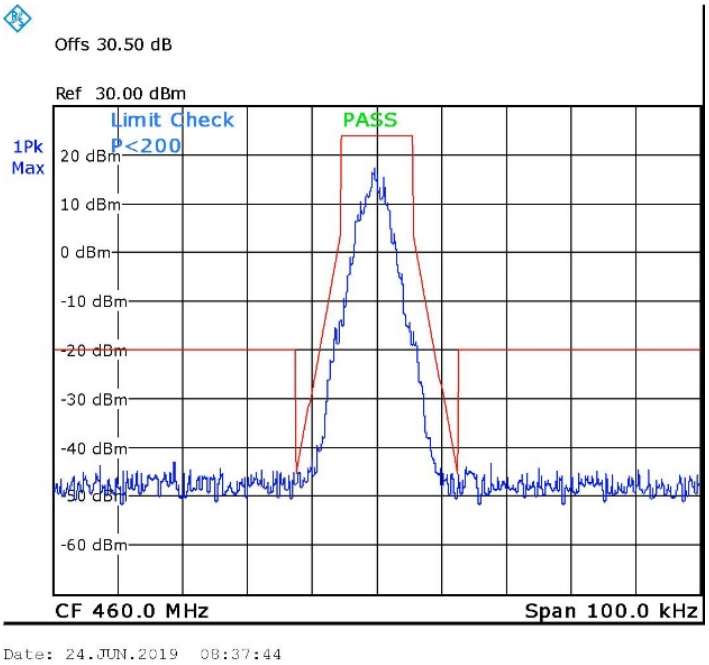

Figure 21. 460.000MHz

*6.5 Test Equipment Used; Emission Mask**

Instrument	Manufacturer	Model	Serial Number	Calibration	
				Last Calibration Date	Next Calibration Due
Spectrum Analyzer	R&S	FSL6	100194	March 24, 2019	March 31, 2020
RF Cable	EIM	705A009301 EIM		December 24, 2018	December 31, 2019
30db Attenuator	MCL	BW-S30W5	533	December 24, 2018	December 31, 2019

*Testing performed June 24, 2019

Figure 22 Test Equipment Used

7. Spurious Radiated Emission

7.1 Test Specification

FCC, Part 90, Sub Part I, Section 210

7.2 Test Procedure

(Temperature (28°C)/ Humidity (50%RH))
Test method used: ANSI C63.26 (2015), Section 5.5.3

For measurements between 0.009MHz-30.0MHz:

The E.U.T was tested inside the shielded room and placed on a non-metallic table, 0.8 meters above the ground. The readings were maximized by the turntable azimuth between 0-360°, and the antenna polarization. The emissions were measured at a distance of 3 meters.

The frequency range 0.009MHz-30MHz was scanned.

For measurements between 30.0MHz-1.0GHz:
A preliminary measurement to characterize the E.U.T was performed inside the shielded room at a distance of 3 meters, using peak detection mode and broadband antennas. The preliminary measurements produced a list of the highest emissions. The E.U.T was then transferred to the open site, and placed on a remote-controlled turntable. The E.U.T was placed on a non-metallic table, 0.8 meters above the ground, at a distance of 3 meters. The readings were maximized by adjusting the antenna height between 1-4 meters, the turntable azimuth between 0-360°, and the antenna polarization.
The frequency range 30.0MHz -1.0GHz was scanned and the list of the highest emissions was verified and updated accordingly.

For measurements between 1.0GHz-5.0GHz:

The E.U.T was tested inside the shielded room and placed on a non-metallic table, 1.5 meters above the ground. The readings were maximized by the turntable azimuth between 0-360°, and the antenna polarization. The emissions were measured at a distance of 3 meters.

The frequency range 1.0GHz -5.0GHz was scanned.

The E.U.T. was replaced by a substitution antenna driven by a signal generator. The height was readjusted for maximum reading. The signal generator level was adjusted to obtain the same reading on the EMI receiver
The signals observed were converted to radiated power using:

$$P_d(\text{dBm}) = P_g(\text{dBm}) - \text{Cable Loss (dB)} + \text{Substitution Antenna Gain (dBd)}$$

P_d = Dipole equivalent power (result).
P_g = Signal generator output level.
A Peak detector was using for this test.

The table below describe only results with the highest radiation.

7.3 Test Limit

The power of any emission outside of the authorized operating frequency ranges must be attenuated below the transmitting power (P) by a factor of at least 50 + 10*log (P) dB, yielding –20dBm.

7.4 Test Results

Carrier Channel	Freq.	Antenna Pol.	Maximum Peak Level	Signal Generator RF Output	Cable Loss	Antenna Gain	Effective Radiated Power Level	Limit	Margin
(MHz)	(MHz)	(V/H)	(dBµV/m)	(dBm)	(dB)	(dBd)	(dBm)	(dBm)	(dB)
450.006	900.0	V	72.5	-28.9	0.5	5.0	-24.4	-20.0	-4.4
	900.0	H	76.0	-25.0	0.5	5.0	-20.5	-20.0	-0.5
	1350.0	V	55.5	-44.4	0.5	7.0	-37.9	-20.0	-17.9
	1350.0	H	56.6	-42.4	0.5	7.0	-35.9	-20.0	-15.9
	1800.0	V	58.7	-43.6	0.5	7.0	-37.1	-20.0	-17.1
	1800.0	H	59.3	-42.8	0.5	7.0	-36.3	-20.0	-16.3
460.000	920.0	V	66.0	-35.4	0.5	5.0	-30.9	-20.0	-10.9
	920.0	H	75.8	-25.1	0.5	5.0	-20.6	-20.0	-0.6
	1380.0	V	58.7	-40.7	0.5	7.0	-34.2	-20.0	-14.2
	1380.0	H	58.2	-41.0	0.5	7.0	-34.5	-20.0	-14.5
	1840.0	V	63.3	-39.3	0.5	7.0	-32.8	-20.0	-12.8
	1840.0	H	58.8	-43.8	0.5	7.0	-37.3	-20.0	-17.3

Figure 23 Spurious Radiated Emission

JUDGEMENT: Passed by 0.5 dB

7.5 Test Instrumentation Used; Radiated Measurements*

Instrument	Manufacturer	Model	Serial Number	Calibration	
				Last Calibration Date	Next Calibration Due
EMI Receiver	HP	8542E	3906A00276	February 28, 2019	February 28, 2020
RF Filter Section	HP	85420E	3705A00248	February 28, 2019	February 28, 2020
EMI Receiver	R&S	ESCI7	100724	February 27, 2019	February 28, 2020
Spectrum Analyzer	HP	8593EM	3536A00120ADI	February 26, 2019	February 28, 2020
Active Loop Antenna	EMCO	6502	9506-2950	October 19, 2017	October 31, 2019
Antenna Biconical	EMCO	3110B	9912-3337	May 21, 2019	May 31, 2020
Antenna Log Periodic	EMCO	3146	9505-4081	May 31, 2018	May 31, 2020
Horn Antenna 1G-18G	ETS	3115	29845	May 31, 2018	May 31, 2021
Low Noise Amplifier	Narda	LNA-DBS-0411N313	013	December 24, 2018	December 31, 2019
Low Noise Amplifier	Sophia Wireless	LNA 28-B	232	December 24, 2018	December 31, 2019
Semi Anechoic Civil Chamber	ETS	S81	SL 11643	NCR	NCR
Antenna Mast	ETS	2070-2	-	NCR	NCR
Turntable	ETS	2087	-	NCR	NCR
Mast & Table Controller	ETS/EMCO	2090	9608-1456	NCR	NCR

*Testing performed May 26, 2019

Figure 24 Test Equipment Used

8. Transmitter Frequency Stability

8.1 Test Specification

FCC, Part 90, Sub Part I, Section 213; Part 2, Section 1055

8.2 Test Procedure

(Temperature (22°C)/ Humidity (45%RH))
Test method used: ANSI C63.26 (2015), Section 5.2.6

The E.U.T operation mode and test setup are as described in Section 2 of this report.

The E.U.T. was operated with a CW signal at 460MHz.

The E.U.T. was placed inside a temperature chamber.

The spectrum analyzer was set to 20.0 kHz span and 1.0 kHz RBW, 3.0 kHz VBW.

Counter function was set for this evaluation.

The E.U.T. was operated from external 3.6VDC at nominal temperature (+25.0°C).

The carrier frequency was measured and recorded (reference frequency reading).

The carrier frequency was measured and recorded after at least 20 minutes of exposing the E.U.T. to the temperature.

8.3 Test Limit

In the 421-512 MHz band, fixed and base stations with a 12.5 kHz channel bandwidth must have a frequency stability of ±1.5 ppm(690Hz).

8.4 Test Results

JUDGEMENT: Passed

The details of the results are given in *Figure 25*.

Transmitter Frequency Stability

Temperature	Voltage	Frequency	Drift	Limit
(°C)	(VDC)	(MHz)	(Hz)	(Hz)
+20.0	3.06	459.999418	+15.0	690.0
	3.6	**459.999403**	**-**	690.0
	4.14	459.999425	+22.0	690.0
-30.0	3.6	459.999178	-225.0	690.0
-20.0	3.6	459.999269	-134.0	690.0
-10.0	3.6	459.999404	+1.0	690.0
0.0	3.6	459.999421	+18.0	690.0
+10.0	3.6	459.999438	+35.0	690.0
+30.0	3.6	459.999473	+70.0	690.0
+40.0	3.6	459.999500	+97.0	690.0
+50.0	3.6	459.999505	+102.0	690.0

Figure 25. Frequency Stability Test Results

*8.5 Test Equipment Used; Transmitter Frequency Stability**

Instrument	Manufacturer	Model	Serial No.	Last Calibration Date	Next Calibration Due
Spectrum Analyzer	R&S	FSL6	100194	March 24, 2019	March 31, 2020
Climatic Chamber	Thermotron	SM-32C	251030	February 27, 2019	February 28, 2020

*Testing performed May 26, 2019

Figure 26 Test Equipment Used

9. Transient Frequency Behavior

9.1 Test Specification

FCC, Part 90, Section 214

9.2 Test Procedure

(Temperature (22°C)/ Humidity (45%RH))
Test method used: ANSI TIA 603 -E, Section 2.2.19

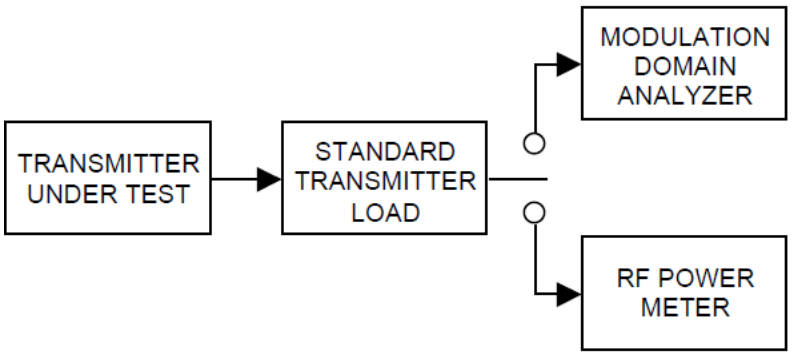

NOTE: for the above proposed set up we used 21.4MHz IF output spectrum analyzer connected to the modulation domain analyzer to convert the operation frequency to 21.4MHz.

9.3 Test Limit

Transmitters designed to operate in the 150-174 MHz and 421-512 MHz frequency bands must maintain transient frequencies within the maximum frequency difference limits during the time intervals indicated:

Time Intervals	Maximum Frequency Difference	421 to 512 MHz
T1*	±12.5kHz	10msec
T2	±6.25kHz	25msec
T3*	±12.5kHz	10msec

** Note: If the transmitter carrier output power rating is 6 watts or less, the frequency difference during this time period may exceed the maximum frequency difference for this time period.*

9.4 Test Results

JUDGEMENT: Passed

The details of the results are given in *Figure 27* to *Figure 28.*

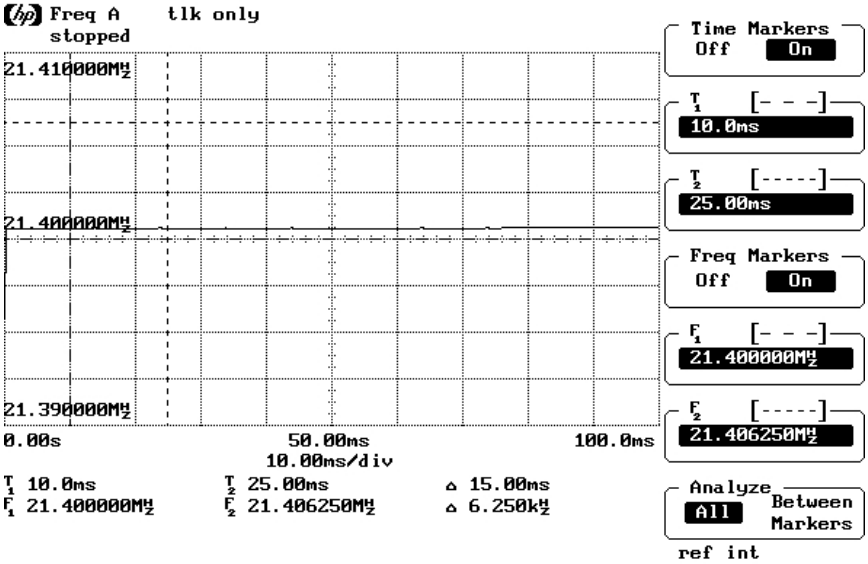

Figure 27. Transient Frequency Behavior "ON" Test Results

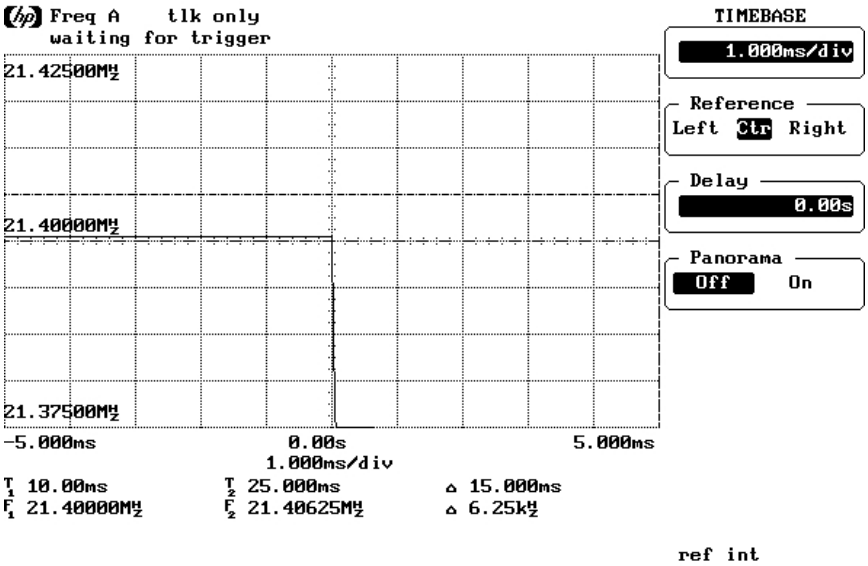

Figure 28. Transient Frequency Behavior "OFF" Test Results

*9.5 Test Equipment Used; Transient Frequency Behavior**

Instrument	Manufacturer	Model	Serial No.	Last Calibration Date	Next Calibration Due
Spectrum Analyzer	HP	8568B	2732A3970	February 27, 2019	February 28, 2020
Spectrum Analyzer Display	HP	85662A	2616A16146	February 7, 2019	February 28, 2020
Modulation Domain Analyzer	HP	53310A	-	January 3, 2019	January 31, 2021

*Testing performed January 5, 2020

Figure 29 Test Equipment Used

10. Antenna Type/Information

Dipole, printed antenna, Omni directional
Peak gain 1.0 dB

11. RF Exposure/Safety

The E.U.T. is a smart air valve. Typical placement of the E.U.T. is in an air valve system. The typical distance between the E.U.T. and the user is at least 20cm.

Calculation of Maximum Permissible Exposure (MPE)
Based on Section 1.1310 Requirements

Using table 1 of Section 1.1310 limit for general population/uncontrolled exposures, the above level is an average over 30 minutes.

1) FCC limit at 460 MHz is: f/1500 (mW/cm^2) = 460/1500 = 0.31 (mW/cm^2)
2) The power density produced by the E.U.T. is

$$S = \frac{P_t G_t}{4\pi R^2}$$

P_t- Transmitted Power = EIRP = 26.9dBm – 1dBi antenna gain = 25.9 dBm
Antenna dipole printed antenna 450-470MHz; 1dBi

G_T- Antenna Gain, 1 dBi gain =1.26 numeric

R- Distance from Transmitter using 20cm worst case

3) The peak power density is:

S= 25.9 x1.26/4π(20^2) = 0.006mW/cm^2

This is below the FCC limit of 0.31 (mW/cm^2)

12. APPENDIX A - CORRECTION FACTORS

12.1 Correction factors for RF OATS Cable 35m ITL #1911

Frequency (MHz)	loss (dB)
30.0	1.3
50.0	1.7
100.0	2.6
200.0	3.7
300.0	4.7
400.0	5.5
500.0	6.3
600.0	7.0
700.0	7.6
800.0	8.4
900.0	9.0
1000.0	9.6

12.2 Correction factor for RF cable for Anechoic Chamber ITL #1840

FREQ (MHz)	LOSS (dB)
1000.0	1.5
2000.0	2.1
3000.0	2.7
4000.0	3.1
5000.0	3.5
6000.0	4.1
7000.0	4.6
8000.0	4.9
9000.0	5.7
10000.0	5.7
11000.0	6.1
12000.0	6.1
13000.0	6.2
14000.0	6.7
15000.0	7.4
16000.0	7.5
17000.0	7.9
18000.0	8.1
19000.0	8.8
20000.0	9.1

NOTES:

1. *The cable is manufactured by Commscope*
2. *The cable type is 0623 WBC-400, serial # G020132 and 10m long*

12.3 Correction factors for Active Loop Antenna

ITL # 1075

F(MHz)	AF(dB/m)
0.01	18.4
0.02	14.3
0.03	13.3
0.05	11.7
0.1	11.4
0.2	11.2
0.3	11.2
0.5	11.2
0.7	11.2
1	11.4
2	11.5
3	11.5
4	11.4
5	11.3
6	11.1
7	11.1
8	11.1
9	11
10	11
20	10
30	8

12.4 Correction factors for biconical antenna ITL #1356

Frequency [MHz]	AF [dB/m]
30	13.00
35	10.89
40	10.59
45	10.63
50	10.12
60	9.26
70	7.74
80	6.63
90	8.23
100	11.12
120	13.16
140	13.07
160	14.80
180	16.95
200	17.17

12.5 Correction factors for log periodic antenna ITL # 1349

Frequency	AF
[MHz]	[dB/m]
200	11.58
250	12.04
300	14.76
400	15.55
500	17.85
600	18.66
700	20.87
800	21.15
900	22.32
1000	24.22

12.6 Correction factors for Double –Ridged Waveguide Horn ANTENNA

3 meter range; ITL # 1352

FREQUENCY (GHz)	AFE (dB/m)		FREQUENCY (GHz)	AFE (dB/m)
0.75	25.0		9.5	38.0
1.0	23.5		10.0	38.5
1.5	26.0		10.5	38.5
2.0	29.0		11.0	38.5
2.5	27.5		11.5	38.5
3.0	30.0		12.0	38.0
3.5	31.5		12.5	38.5
4.0	32.5		13.0	40.0
4.5	32.5		13.5	41.0
5.0	33.0		14.0	40.0
5.5	35.0		14.5	39.0
6.0	36.5		15.0	38.0
6.5	36.5		15.5	37.5
7.0	37.5		16.0	37.5
7.5	37.5		16.5	39.0
8.0	37.5		17.0	40.0
8.5	38.0		17.5	42.0
9.0	37.5		18.0	42.5