Outdoor Sports Watch

User Manual

Thank you for choosing our smart watch. You can read this manual and have a thorough understanding of the use and operation of the equipment.

The Company reserves the right to make changes to the contents of this manual without prior notice

Model: DT28

Product includes: Package*1, manual*1, Smart Watch*1, Charging line*1.

I. Function description of bracelet

1.1 Button description:

A: Press and hold the switch button, short press to lock the screen/wake up the screen.

B: Return to the upper level interface.

1.2 Charging instructions:

Magnetic charging is as shown below.

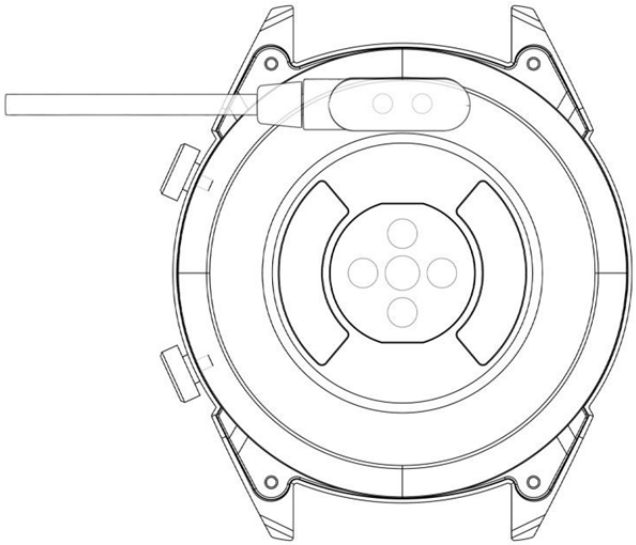

*Be aware that the two contacts of the USB cable are not allowed to contact the conductor at the same time, or it will cause the circuit to burn.

1.1 Dial plate interface in standby mode:
1) Swipe right to open the push message interface;
2) Swipe down to open the drop-down menu which displays brightness, settings, do not disturb. Swipe left to open the weather interface
3) Swipe up to open the main menu list interface;
4) Press and hold the dial plate interface in standby mode to swipe and switch. Press and hold after selecting to set successfully.
1.2 Push message
Swipe right the standby interface to open the push message interface and bind the bracelet with Fundo app. When the notification authority is enabled, the new message received by the mobile notification bar will be pushed to the bracelet. A total of 8 pieces of messages can be saved. The message received after the 8th message will overwrite the previously received message one by one.
1.3 Drop-down menu
Swipe down the standby interface to open the drop-down menu interface.
1) The left icon shows the Bluetooth connection status
2) Click the middle icon to turn on/off the Do Not Disturb mode. When the Do Not Disturb mode is on, the vibration is activated only for Find the Bracelet and the Alarm;
3) The right icon can be used to adjust the screen brightness;
1.4 Step count
The step count is on by default. This interface displays the current number of steps in the bracelet. The data is cleared every day at 12 am.
1.5 Sleep
Sleep monitoring time period: from 21:00 to 9:00 in the next day, after the bracelet generates data and exits sleep monitoring, it binds Fundo app to synchronize the sleep data from bracelet end to APP end.
1.6 Bluetooth music
Android: after connecting the bracelet in the phone settings, open the music player, play/pause and switch songs at the bracelet end; (no need to bind in the app, if it is already bound, please unbind it and connect in the phone settings)
IOS: Open the music player after the bracelet is bound to the app, play/pause and switch songs at the bracelet end.
1.7 Weather
After the phone is connected to the network and the app has acquired the weather information, bind the bracelet to the app and push the weather information in the app to the bracelet.
1.8 Sports mode (walking, running, cycling, hiking, swimming, football, basketball, table tennis, badminton)
1.8.1 Select the corresponding sports mode and click the screen to enter corresponding sports mode after countdown 3, 2, 1; swipe right to jump to the end of the sports interface, click "pause" to return to the sports interface to continue sports,

click "□" to end the sports and save the data;
1.8.2 Sports data can be saved when the distance is greater than 200 meters or the time is greater than 5 minutes; when the sports end without satisfying the condition, it will prompt “the data is too little to be saved”
1.8.3 After the bracelet is bound to the app, click the synchronization on the Fundo sports history interface to synchronize the history data of the sports at bracelet end and view trajectory and detailed data at the app end.
1.9 ECG measurement
It can test ECG and monitor ECG status;
Please properly wear the bracelet during test. After the function is on, touch the touch screen position with finger to start measurement. The test ends at 60s. If it is less than 60s, it prompts to return to prompt page where the finger should be placed.
1.10 Heart rate
Wear the bracelet correctly on the (left hand/right hand) wrist and enter the heart rate menu for continuous measurement of the heart rate. After the bracelet is bound to the app, the heart rate data is synchronized to the app in real time.
1.11 Blood pressure
Wear the bracelet correctly on the (left hand/right right) wrist and enter the blood pressure menu for single measurement of blood pressure value. After the bracelet is bound to app, the blood pressure data can be synchronized to the app in real time.
1.12 Blood oxygen
Wear the bracelet correctly on the (left hand/right right) wrist and enter the blood oxygen menu for single measurement of blood oxygen value. After the bracelet is bound to app, the blood oxygen data can be synchronized to the app in real time.
1.13 Alarm clock
Bind bracelet to the app and set synchronized alarm clock in the app to the bracelet.
1.14 Sedentary reminder
Turn on/off sedentary reminder
1.15 Stopwatch
Enter the timing interface by clicking stopwatch, click the start icon to start timing and click again to pause. Swipe right to exit. When entering the stopwatch again, the previous timing is cleared and the timing is restarted.
1.16 Find mobile phone
Click Find the mobile phone at bracelet end to pop up a prompt box after the bracelet is bound to the app.
1.17 Remote camera
After the bracelet is bound to the app, click camera in the app and show remote camera icon on the bracelet and automatically turn on camera on mobile phone. Click the screen at the bracelet end to control the phone to take photos which are stored at the mobile phone end.
1.18 Settings
1.18.1 Sedentary reminder
It’s off by default. After connecting the APP, the on/off function at app end can control the function at bracelet end. This function can be manually turned on or off at bracelet

end, but the APP is not affected.

1.18.2 Raise to wake

It's off by default. After connecting the APP, the on/off function at app end can control the function at bracelet end. This function can be manually turned on or off at bracelet end, but the APP is not affected.

1.18.3 About

View the Bluetooth name and Bluetooth address and version number

1.18.4 Restore factory settings

Click Restore factory settings to restore the bracelet to the factory state

1.18.5 Shutdown

After clicking Shutdown, the bracelet is turned off.

II. Bind Fundo app

1. APP download method

1.1 Scan QR code to download

1.2 Search in application market to download

Android:

search Fundo in Myapp, Wandoujia, Google play and other application markets to download

IOS:

Search Fundo in the App Store to download

Android: the application icon of Fundo after installation is as shown:

iPhone: the application icon of Fundo after installation is as shown:

2 Bind Bluetooth

2.1 Unconnected:

After the bracelet is on, Bluetooth is always in the search state. After opening the APK/APP, enter more-connected devices, click search, and select the corresponding bracelet device name to bind the bracelet to the app successfully.

2.2 Bind to the Fundo app:

Bracelet time synchronization: After the bracelet is successfully bound to the app, click to realize the synchronization of the time and time format of the bracelet and the

mobile phone.

2.3 Find devices

After the bracelet is successfully bound to the app, click Find Bracelet to vibrate and wake up bracelet screen for three times;

2.4 Data synchronization

After the bracelet is successfully bound to the app, the health data of the bracelet can be synchronized to the app; open the heart rate, sleep, and sports interface to select the date, click icon in the upper right corner to successfully share the data of current interface to the QQ, QQ space, WeChat, WeChat moment, Facebook, Twitter, etc.;

2.5 Message push

After the bracelet is successfully bound to the app, the corresponding notification authority in the mobile phone system is enabled. Enter more-notification application in app, start corresponding third party applications.

2.5.1. Call reminder:

Enable the call reminder in the personal application. When the mobile end receives one or more incoming calls, the bracelet will receive one or more call reminder at the same time;

2.5.2. SMS notification:

Enable SMS notification in the personal application. When the mobile end receives one or more SMS, the bracelet will receive one or more SMS reminders at the same time;

2.5.3. Other application message notifications:

Enable corresponding message notification in the personal application, such as WeChat, QQ, Facebook, Twitter, etc. When the mobile phone end receives one or more application message notifications, the bracelet end will receive one or more corresponding message notifications at the same time.

2.6 WeChat sports

The sports data of the bracelet can be synchronized to the WeChat sports ranking list. Follow the official account "Fundo health" to select the binding device and fill in the MAC address of the device for binding. After the binding is successful, the official account can synchronize the sports data (MAC address : Enter the bracelet to view);

Binding method:

The Android end suggests the binding to APP before the binding to WeChat.

The iPhone end does not need to bind the APP. Unbind first and ignore the device in the phone settings, then bind in the WeChat;

2.7 Do Not Disturb mode

When the Do Not Disturb mode is on, only Find bracelet and the alarm clock have vibration reminder.

2.8 Drinking reminder

Set the period from start to end and frequency (minutes), click to enter the resetting, select the water reminder date (week), check the drinking reminder and save. When the drinking reminder time arrives, it vibrates and shows drinking icon at the bracelet end.

2.9 Sedentary reminder

Set the period from start to end and sedentary interval (minutes), threshold (steps), click to enter the resetting to select the sedentary reminder date (week). When the sedentary reminder time arrives, it vibrates and shows sedentary icon at the bracelet end.

2.10 Alarm clock reminder

Click the alarm clock reminder setting to add the alarm time. When the alarm time arrives, the bracelet will prompt: the alarm icon and time, and vibrate for 20 times;

2.11 Reminder mode

a. Wake up screen: Any reminders other than alarm clock, sedentary and drinking reminder will only be prompted with bright screen at bracelet end;

b. Vibrate: Any reminders other than alarm clock, sedentary and drinking reminder will only be prompted with vibration at bracelet end;

c. Wake up screen + vibrate: for any reminder, the bracelet end only displays bright screen + vibrates;

2.12 Heart rate detection

Set the period from start to end and sedentary time interval (minutes), check the heart rate test and save.

2.13 Firmware upgrade

Detect whether the firmware version of the bracelet is the latest one. Prompt to update and upgrade to the latest version when there is a new one.

2.14 Unbind

After the bracelet is bound to app, click the connected device name or swipe left to unbind in More interface. Ignore the paired device in the iPhone settings.

●FAQ

*Do not expose this device to overcooling or overheated conditions for a long time, otherwise it will cause permanent damage.

*Why can’t wear watch when taking a hot bath?

As bath water temperature is high, it will generate mass steam which is in gaseous phase and characterized by small molecule radius. It is easy to penetrate through watch housing gap. When temperature lowers, it will become liquid phase water drop, which is easy to cause short circuit in the watch, resulting in damaged circuit board and watch.

*The watch can’t start up or charge

If your newly received watch can’t start up, it maybe because battery is under protection due to collision during watch transportation. Plug in charging cable to activate the watch.

If your watch can’t start up due to too low battery or the watch has not been used for a long time, please plug in USB cable and charge for half an hour for activation.

Warranty

1. If it appears quality problems caused by manufacturing, materials, design within one year（since the day of purchase）, we will offer free warranty for. We will offer free warranty for battery and adapter within 6 months. Premise is using normally and correctly.

2. About the fault caused by the users personal reasons, we don't offer free warranty, as follows:

1). Disassemble or refit the product.

2). Caused by immodesty drop

3). All artificial damage or misuse (such as: make water into the host, the external force shatter, scratch damage of peripheral components, etc.), all these are beyond the scope of the warranty.

3. When ask for free warranty, you must provide a warranty card with the seal of purchase place and purchase date.

4. If you met problems during use, please contact the shop customer service which you bought from.

5. Please make the final products as the standard.

Date of purchase:

IMEI code:

Buy store:

Customer signature:

Clerk Signature:

Shop stamp:

FCC statement:

§ 15.19 Labelling requirements.

This device complies with part 15 of the FCC Rules. Operation is subject to the following two conditions: (1) This device may not cause harmful interference, and (2) this device must accept any interference received, including interference that may cause undesired operation.

§ 15.21 Information to user.

Any Changes or modifications not expressly approved by the party responsible for compliance could void the user's authority to operate the equipment.

§ 15.105 Information to the user.

Note: This equipment has been tested and found to comply with the limits for a Class B digital device, pursuant to part 15 of the FCC Rules. These limits are designed to provide reasonable protection against harmful interference in a residential installation. This equipment generates uses and can radiate radio frequency energy and, if not installed and used in accordance with the instructions, may cause harmful interference to radio communications. However, there is no guarantee that interference will not occur in a particular installation. If this equipment does cause harmful interference to radio or television reception, which can be determined by turning the equipment off and on, the user is encouraged to try to correct the interference by one or more of the following measures:

-Reorient or relocate the receiving antenna.

-Increase the separation between theequipment and receiver.

-Connect the equipment into an outlet on a circuit different from that to which the receiver is connected.

-Consult the dealer or an experienced radio/TV technician for help.

*** RF warning for Portable device:**

The device has been evaluated to meet general RF exposure requirement. The device can be used in portable exposure condition without restriction.