## 01 Structure & Function

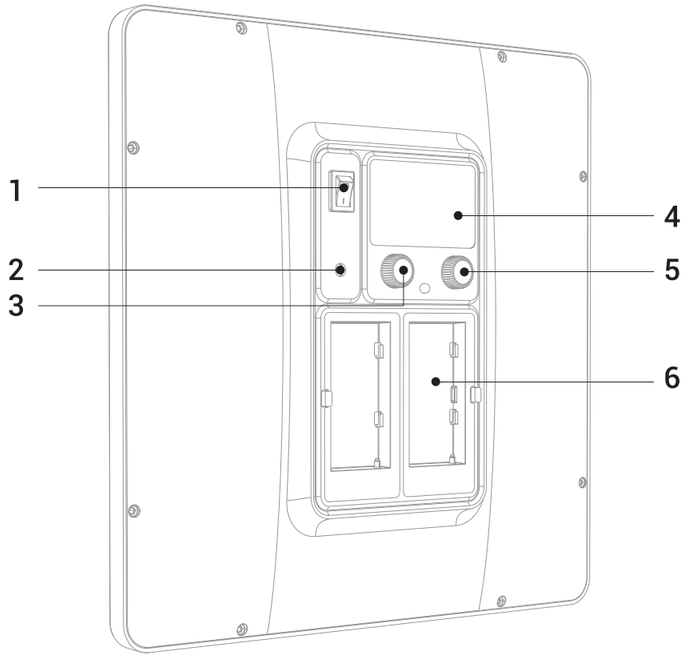


1. Power switch
2. DC power input socket
3. Power knob
4. Display screen
5. Color temp. knob
6. NP battery plate

## 02 Installation and Usage

1. 1.Install NP batteries in the left and right NP battery slots, or connect a DC 17V⎓2.8A power supply to the DC power interface. Turn on the power switch.
2. Rotate the power adjustment knob / color temperature adjustment knob to adjust the power (00%-100%) / color temperature (2700K-6500K).
3. Turn off the power after use.

## 03 Package List

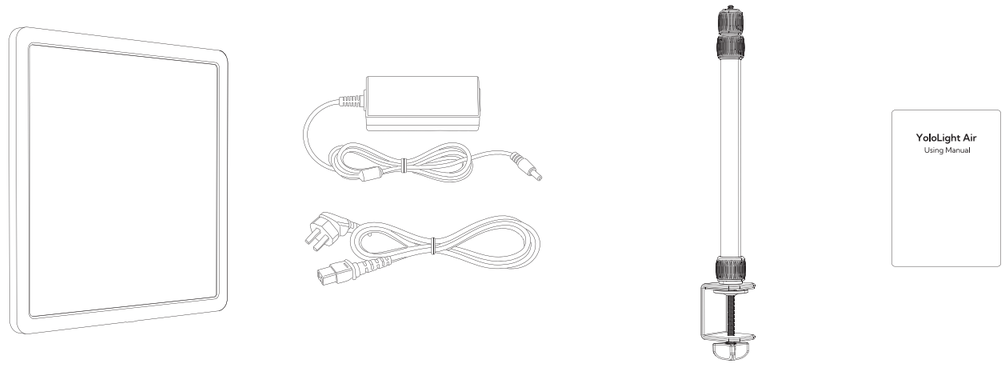


YoloLight Air × 1

Power adapter (17V 2.8A) × 1
Power cable (3m) × 1

Master Mount × 1

User Manual × 1

## 04 Specification

| Parameter | Value |
|---|---|
| Model | YX-LIG-CN001 |
| Input | DC 17V |
| CCT | (2700K–6500K) ±200K |
| CRI | ≥96 |
| TLCI | ≥96 |
| Luminous flux | 4600 LM |
| Bright angle | 120° |
| Power adjustment | 00% ~ 100% |

## 05 Maintenance

1. When replacing accessories and maintaining the equipment, make sure to disconnect the power supply.
2. Please store it in a dry and ventilated place at room temperature after using.
3. When it fails or gets wet, it can be used after repairing by professional person.
4. The product is one year warranty.

## 06 Precautions

1. Make sure using the power supply with earth wire and leakage protection switch.
2. Make sure power is off before changing its accessories and maintenance.
3. High voltage is inside the equipment, non-professionals are forbidden to disassemble.
4. Don't touch or cover the heating part of light to avoid burns and electric shock.
5. Don't look directly at the light source or irradiate the skin for a long time.

## 07 Common Faults and Solutions

| Fault | Solution |
|---|---|
| **No electricity** | Check power cable is damaged or not, the plug is inserted well or not, power switch is damaged or not. |
| **With electricity, digital display can not light up** | Display screen is damaged (repaired by professional person) |
| **Adjustable knob can not work** | Adjustable knob is damaged (repaired by professional person) |

This equipment has been tested and found to comply with the limits for a Class B digital device, pursuant to Part 15 of the FCC Rules. These limits are designed to provide reasonable protection against harmful interference in a residential installation. This equipment generates uses and can radiate radio frequency energy and, if not installed and used in accordance with the instructions, may cause harmful interference to radio communications. However, there is no guarantee that interference will not occur in a particular installation. If this equipment does cause harmful interference to radio or television reception, which can be determined by turning the equipment off and on, the user is encouraged to try to correct the interference by one or more of the following measures:-- Reorient or relocate the receiving antenna.
-- Increase the separation between the equipment and receiver.
-- Connect the equipment into an outlet on a circuit different from that to which the receiver is connected.
-- Consult the dealer or an experienced radio/TV technician for help.

This device complies with part 15 of the FCC Rules. Operation is subject to the following two conditions:
(1) This device may not cause harmful interference, and (2) this device must accept any interference received, including interference that may cause undesired operation.

Changes or modifications not expressly approved by the party responsible for compliance could void the user's authority to operate the equipment

***RF warning for Mobile device:**
This equipment complies with FCC radiation exposure limits set forth for an uncontrolled environment. This equipment should be installed and operated with minimum distance 20cm between the radiator & your body.


### Hangzhou Xingxi Technology Co., Ltd.

Official Website: www.yololiv.com
E-Mail: Contact@yololiv.com
Company Address: Room 112, 112M, Building 1, No. 1818-1, Wenyi West Road, Yuhang Street, Yuhang District, Hangzhou, Zhejiang Province


SCAN FOR MORE INFORMATION

YOLOLIV

# YoloLight Air

Using Manual

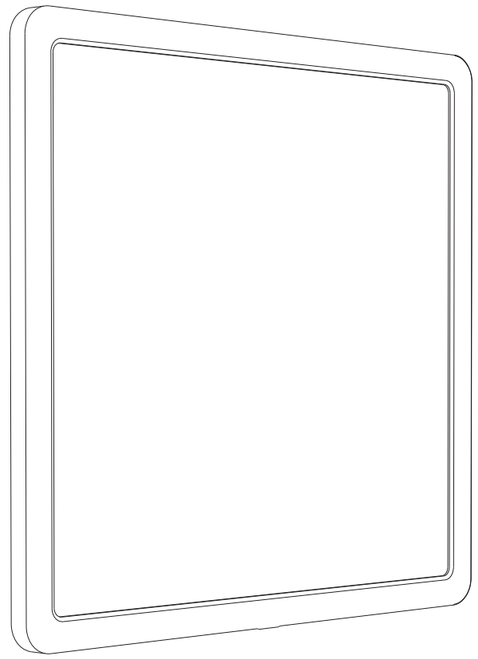

## Thanks so much for choosing YoloLight Air

The YoloLight Air features high-CRI LEDs with a soft, flattering output and adjustable color temperature (2700K–6500K), delivering up to 4600 lumens with a lifespan of over 50,000 hours. Its slim design includes an LCD display and silent aluminum heat dissipation, making it ideal for podcasts, content creators, streamers, video calls, and professional production.

Please read the manual carefully before use. Specifications are based on standard test conditions (23°C). Product details may change without prior notice, and slight variations may occur between batches. While we strive for accuracy, errors may exist, and the final product shall prevail.