Thunder

USER MANUAL

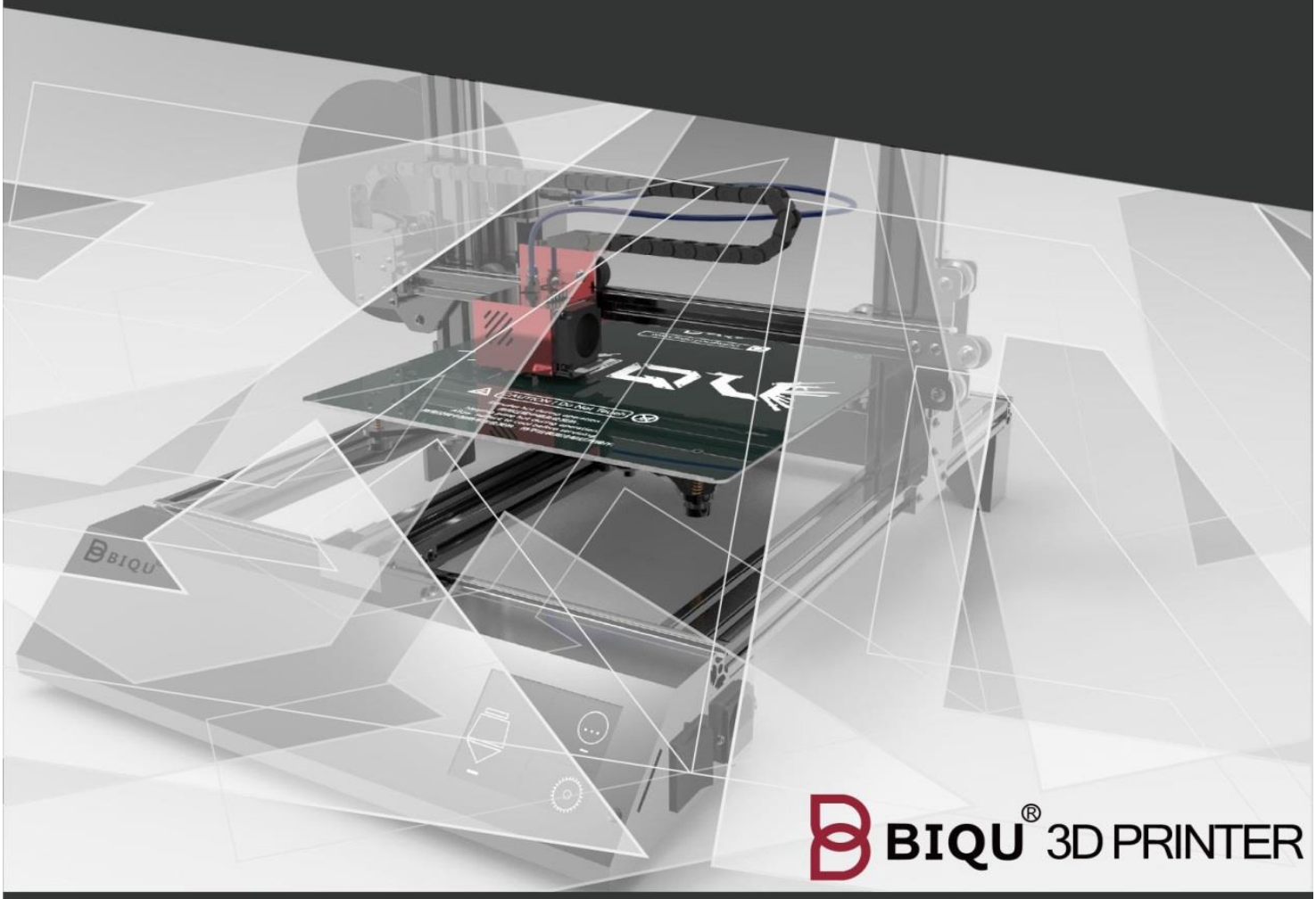

BIQU® 3D PRINTER

SHENZHEN BIGTREE TECHNOLOGY CO.,LTD

Table of Content

One: Product Overview 1
Two: Tools and Supplies 3
Three: Assembly 4
3.1 Machine Assembly 4
3.2 Machine Wiring 7
Four: User interface 9
Five: Specification 15
Six: Feature Overview 16
Seven: Smart Phone Connection 18
Eight: Slicer 23
Nine: Connect and Print 28
9.1 Repetier-Host Installation 28
9.2 Connect Printer with Repetier-Host 29
Ten: Trouble Shooting 34
Eleven: Important Information 36

One: Product Overview

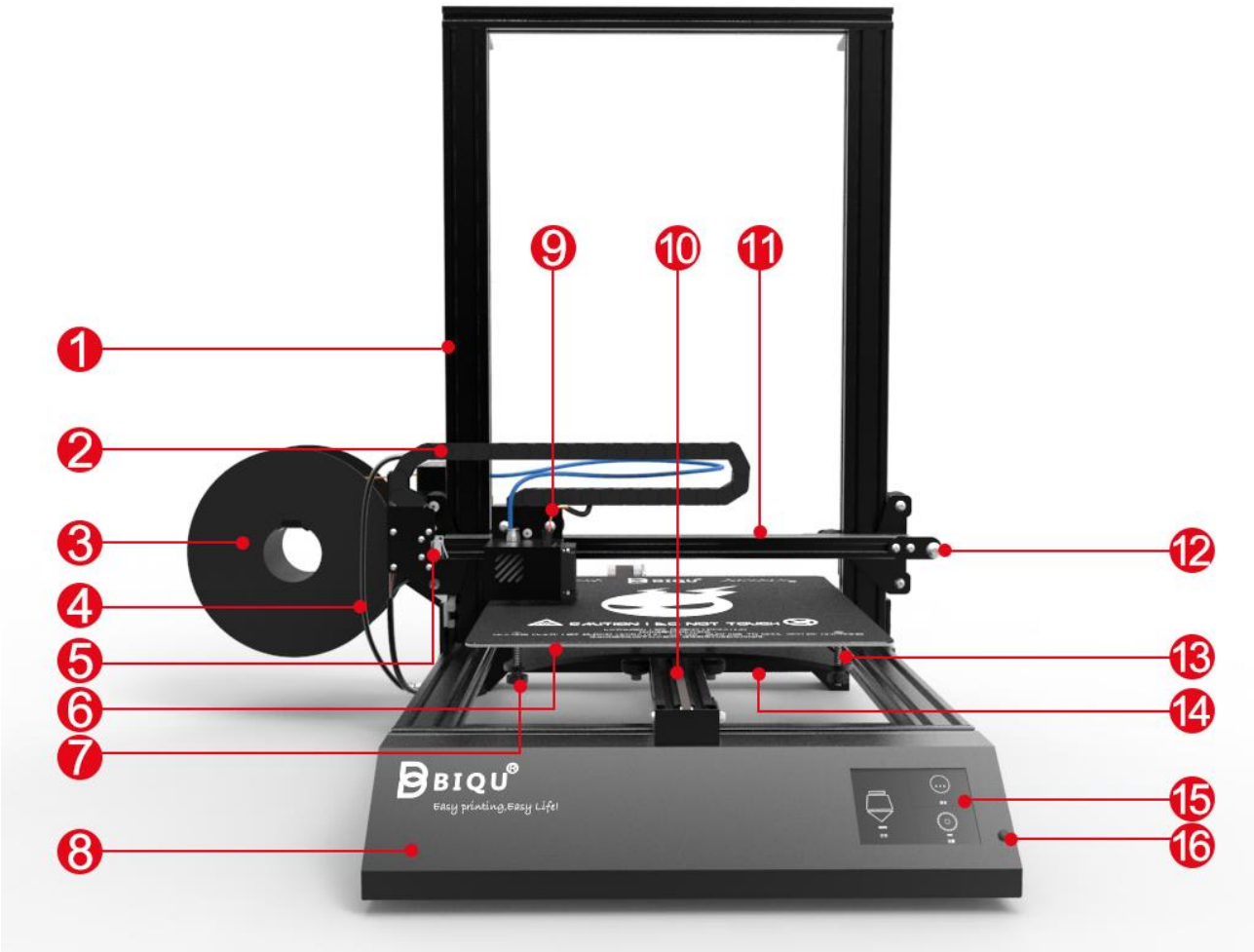

1. z-axis aluminum extrusion
2. cable chain
3. filament
4. circular connector
5. x-axis limit switch
6. heated bed
7. fine adjust nut
8. system unit
9. extruder module
10. y-axis aluminum extrusion
11. x-axis aluminum extrusion
12. bearing
13. spring
14. support plate
15. screen
16. reset button

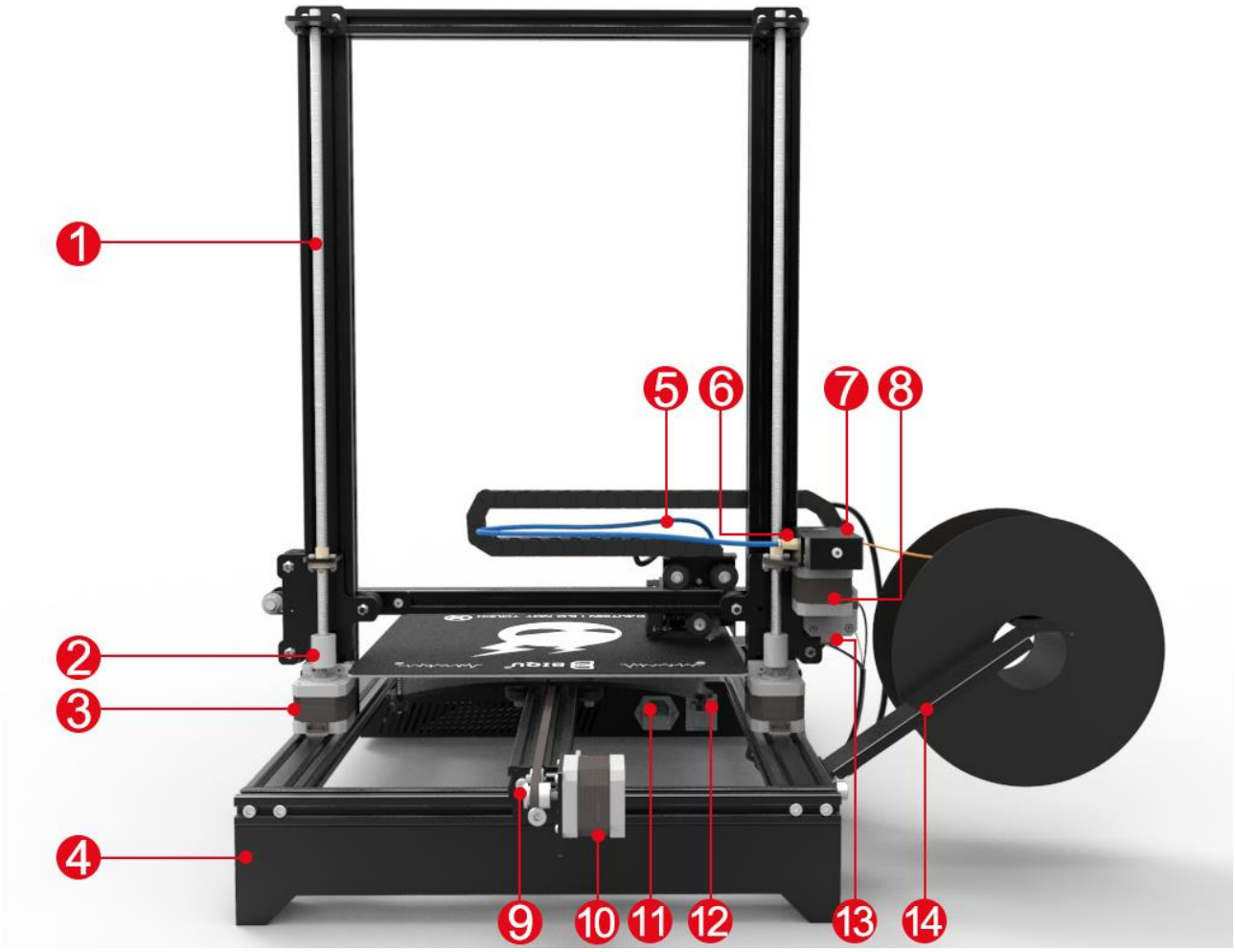

1. screw rod
2. motor coupling
3. z-axis stepper motor
4. support plate
5. teflon tube
6. one-touch fitting
7. extruder
8. extruder stepper
9. y-axis synchronous wheel
10. y-axis stepper motor
11. AC plug
12. on/off switch
13. x-axis stepper
14. filament holder

Two: Tools and Supplies

Please make sure you receive all the tools and supplies, contact your seller as soon as possible if anything is missing.

0.4mm nozzle

SD card reader

SD card

USB cable

Allen key

Diagonal cutting pliers

Zip ties

Film pressure sensor

Filament

Three: Assembly

3.1 Machine Assembly

Please make sure the machine is not damaged during shipping. If there is any problem, contact the seller as soon as possible. If the machine is in good condition, and no tools or supplies are missing, feel free to start installing your printer.

Step one: place the aluminum extrusion (2) such that they are facing toward the front of the printer (1), use the bolts from bag A1 (black M5*25 bolt) (3) to fasten both aluminum extrusions.

Step two: check that the aluminum extrusion (1) is secured, make sure (2) and (3) are orientated correctly according to the picture.

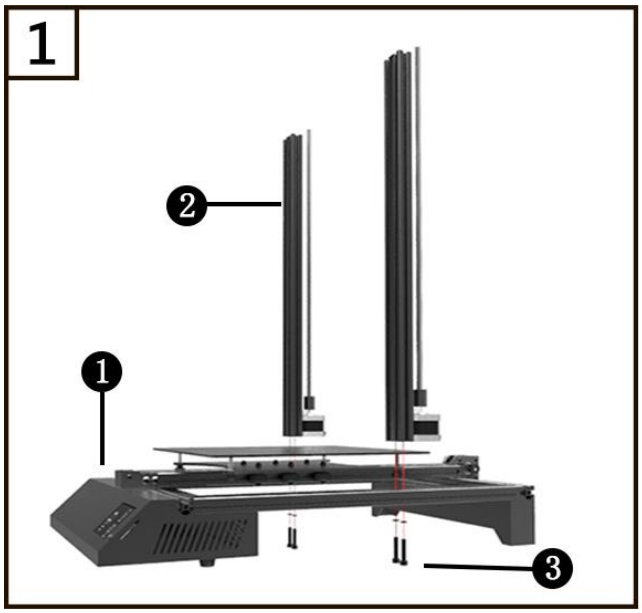

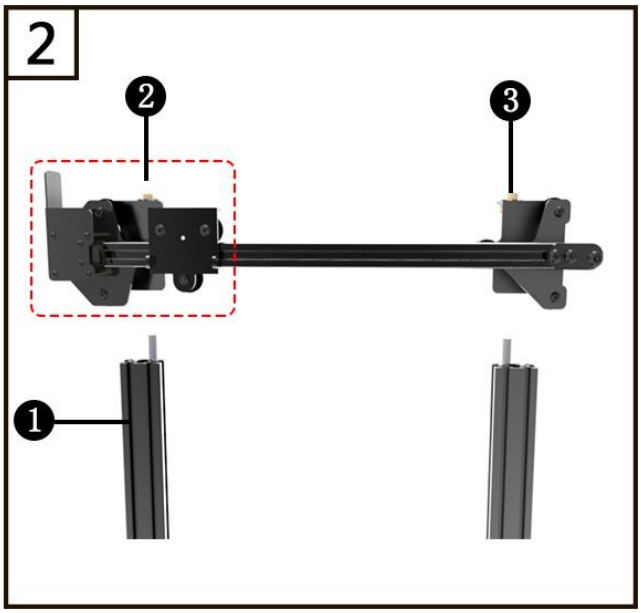

Step three: twist couplings of both z-axis steppers at the same time so that the x-axis rail can slide in smoothly.

Step four: make sure the aluminum extrusion is facing the front (similar to step one), use the hardware in bag A1 (black M5*25 bolts, M5 washers) to secure the top aluminum extrusion.

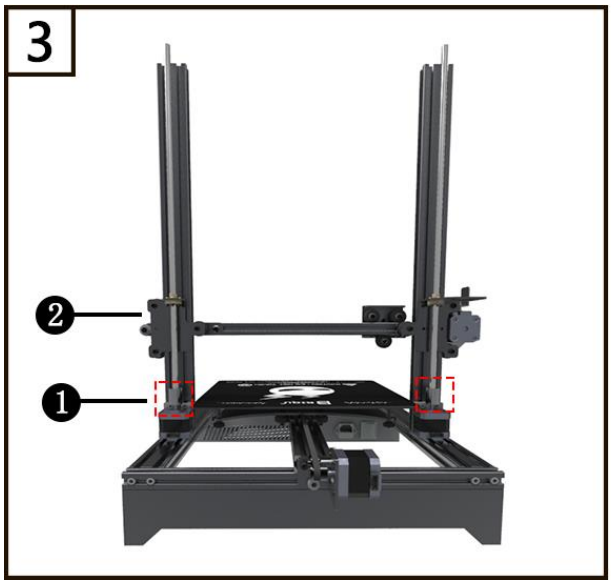

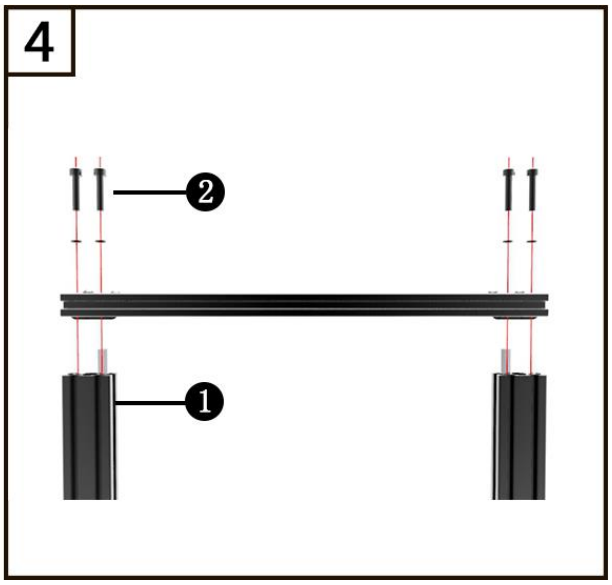

Step five: extruder stepper installation. Make sure you place the stepper (1) with the correct orientation as highlighted with the red box. Four threaded holes are facing the aluminum plate (2). Use then bag of hardware labeled as A2 (black M3*10 bolt) (3). Tighten the stepper as shown.

Step six: find the x-axis slider (1), use bag A3 hardware (black M4*8 bolt), and tighten up extruder module (2).

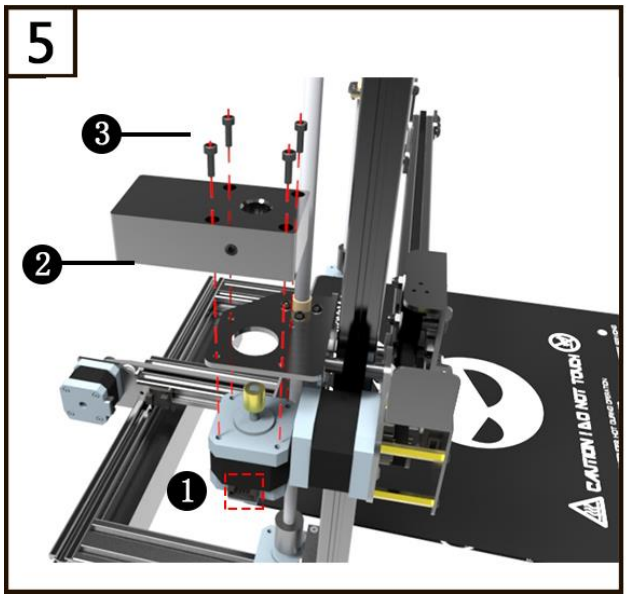

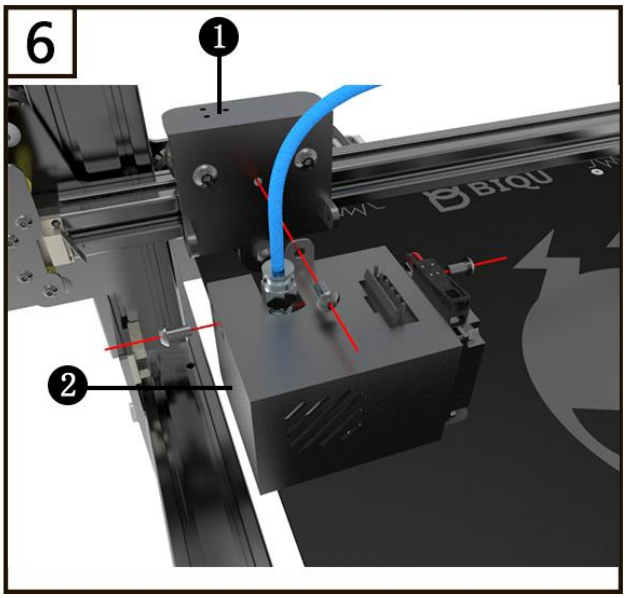

Step seven: place the extruder wiring harness on the right, use the bolts in bag A4 to secure the cable chain from left side (2) to right side (3), this way is easier.

Step eight: slightly loosen the nuts near plate (1) and filament holder (2), fasten on the aluminum extrusion.

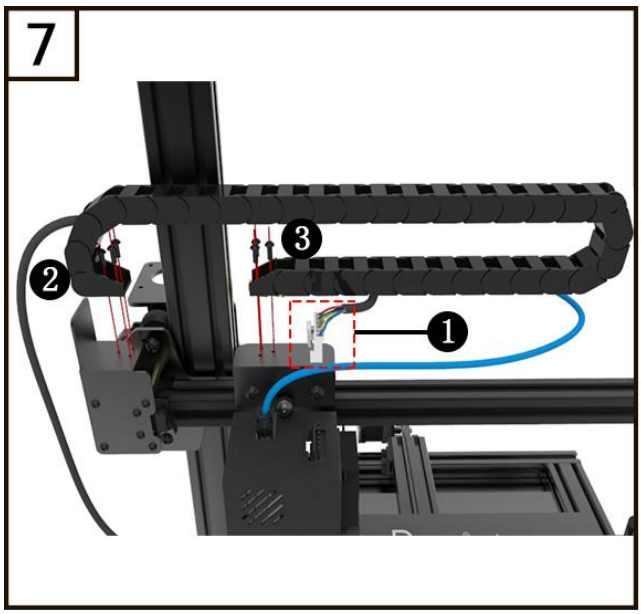

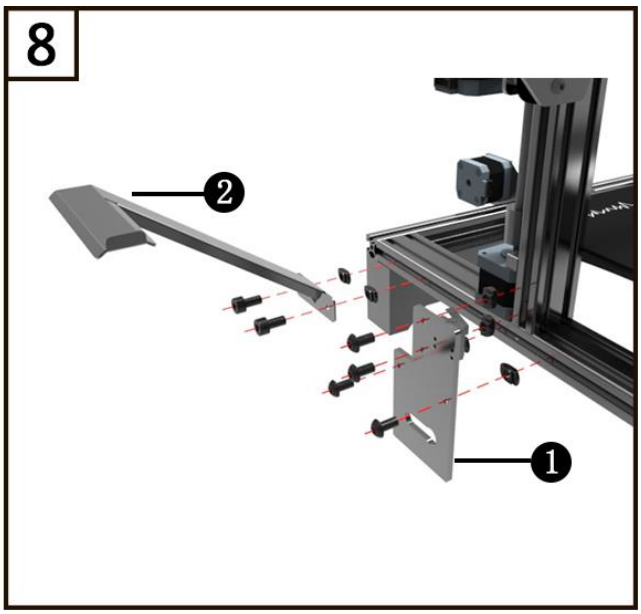

Step nine: slightly loosen the nuts near the T shape plate (1), fasten the plate on the aluminum extrusion.

Note: refer to picture 10 about how to assemble parts on the aluminum extrusion.

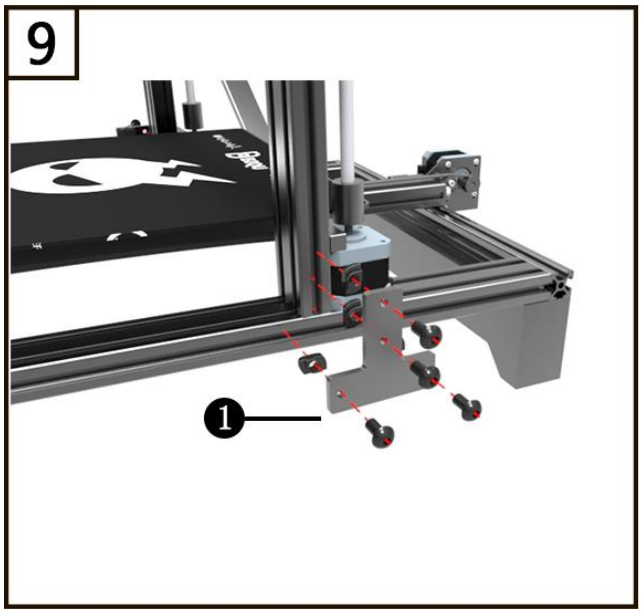

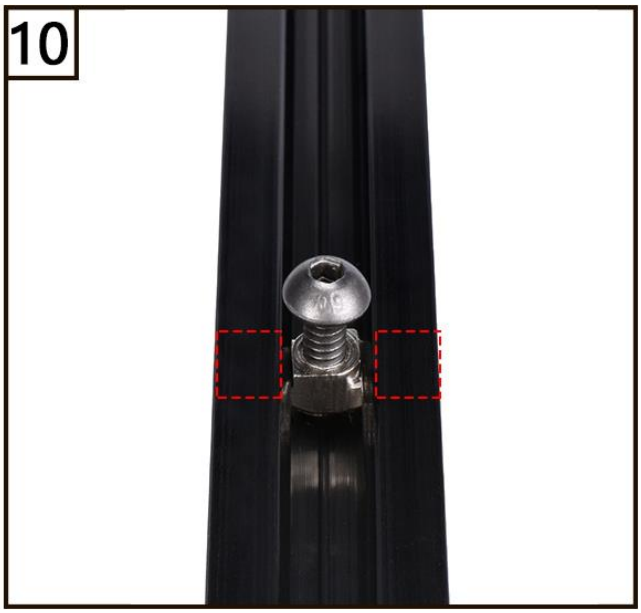

3.2 Machine Wiring

Step one: screw the golden one-touch fitting (1) to the extruder and connect the filament sensor cable (2) to the extruder.

Step two: connect the extruder cable E0 (1) to the extruder, connect x-axis stepper cable and limit switch cable to (2) and (3).

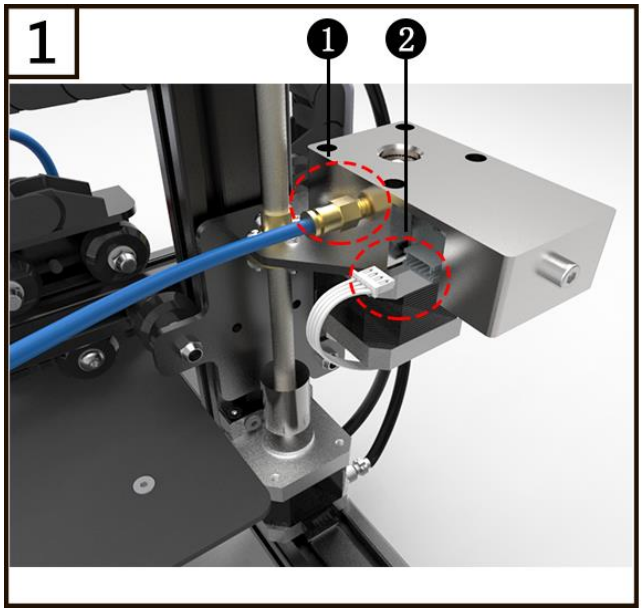

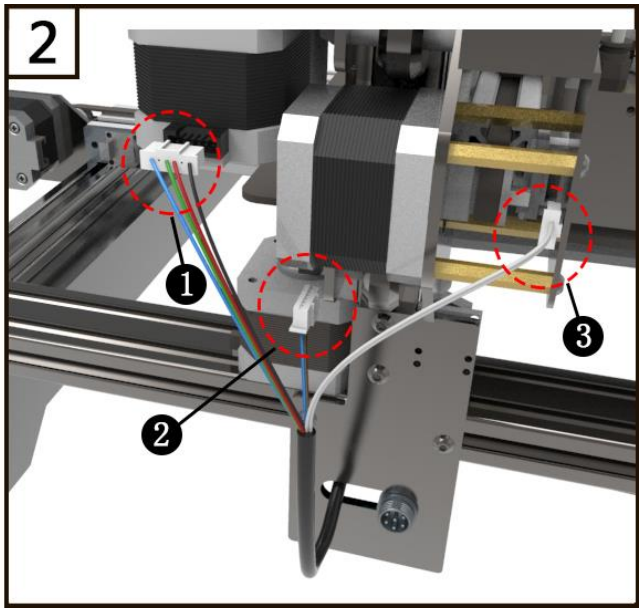

Step three: connect the circular connector (1) on to the correct location showed in the picture, align the connector before plugging in, then fasten the connector.

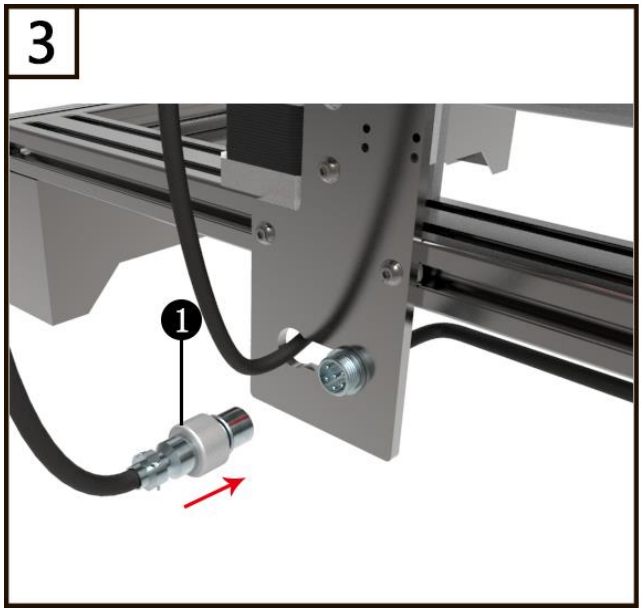

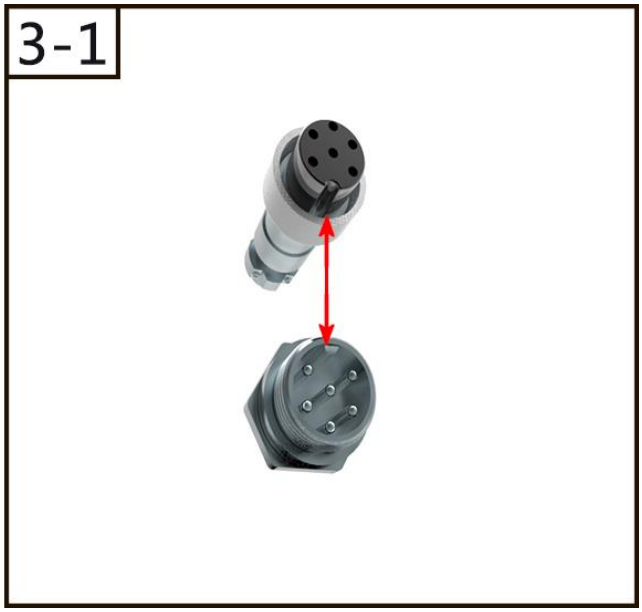

Step four: connect Z axis endstop cable (1) with endstop from inner side.

Step five: plug in the extruder cable (1).

Step six: wire the cable to the z-axis stepper motors (1) (2).

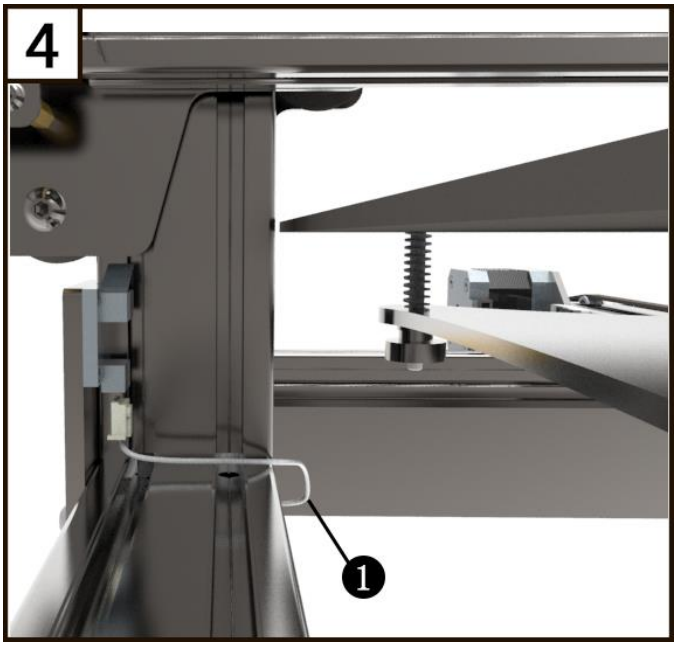

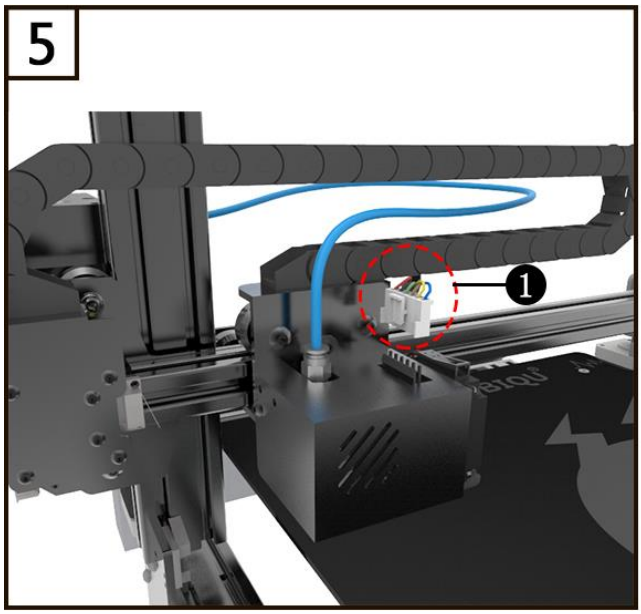

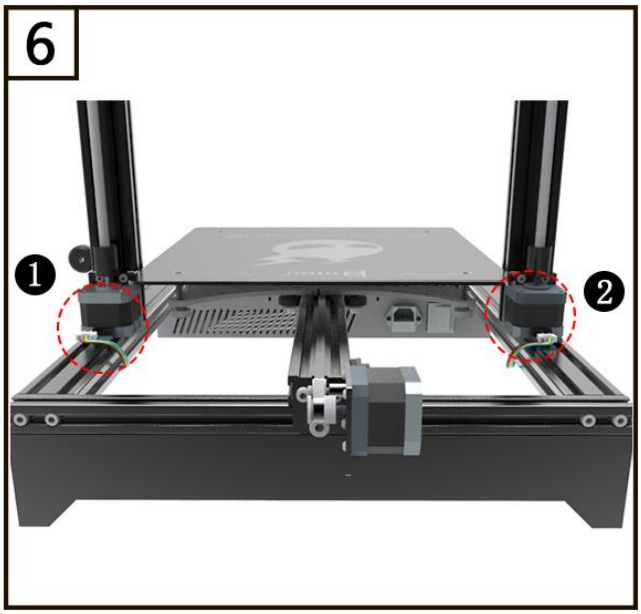

Notes:

Double check your connection.

Use a scale/ruler to make sure (1) and (2) are at the same height.

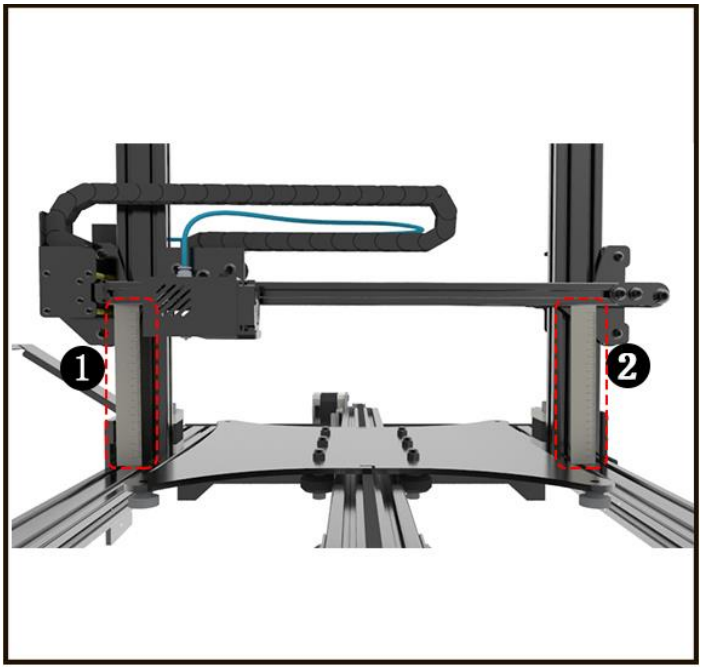

Congratulations! The installation is finished. Start your 3D printing now!

Four: User interface

Recommend to touch screen by nail/stylus

4.1 Auto Leveling

Plug in the power cord (1), remove the film pressure sensor, one end connects to the nozzle and the other connect to the side of the unit as shown in the picture (2); click “more” on the main interface, press “auto leveling” and confirm, and you will see “leveling is completed” after the print bed is leveled. **Note: make sure your print environment is less than 45 degree Celsius so that the film pressure sensor can work properly, you don’t need to redo auto leveling for future print.**

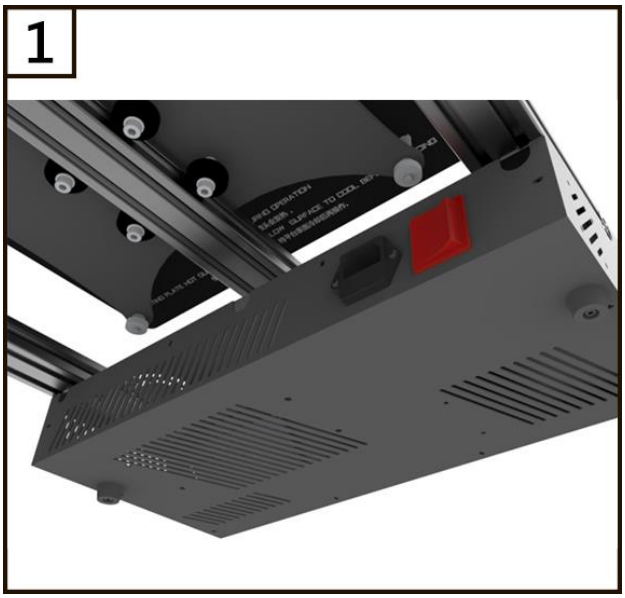
1

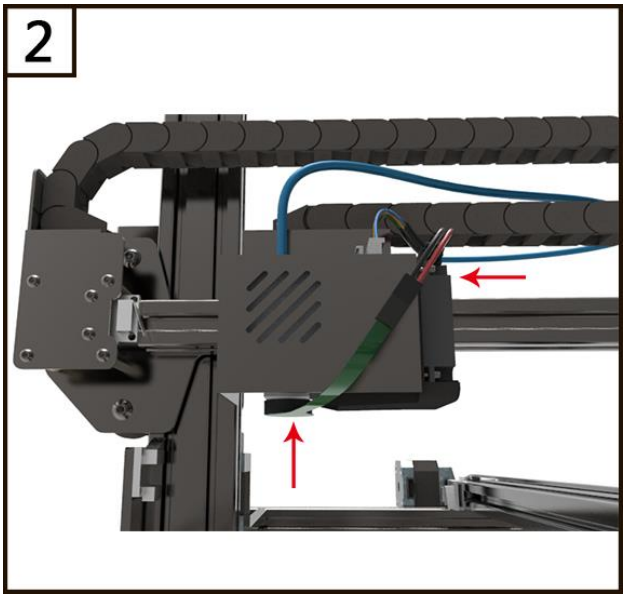
2

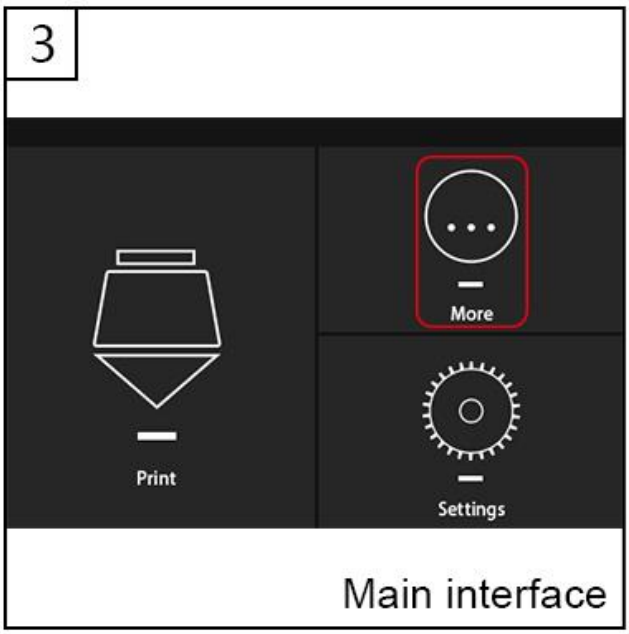
3
Print
More
Settings
Main interface

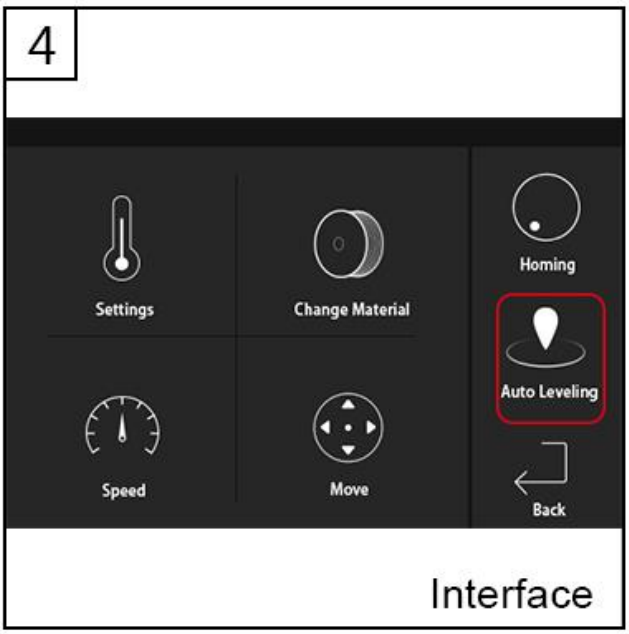
4
Settings
Change Material
Homing
Auto Leveling
Speed
Move
Back
Interface

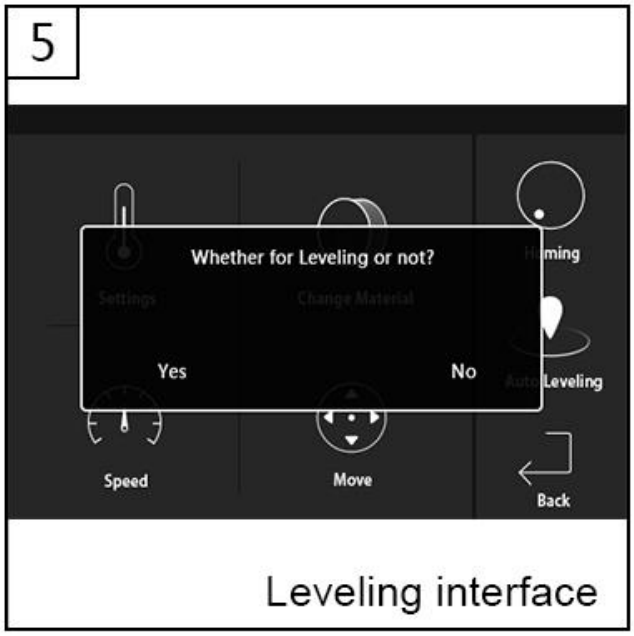

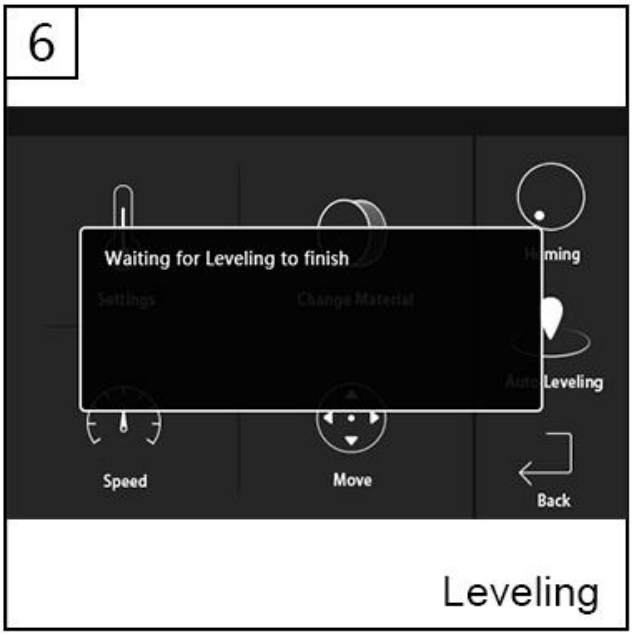

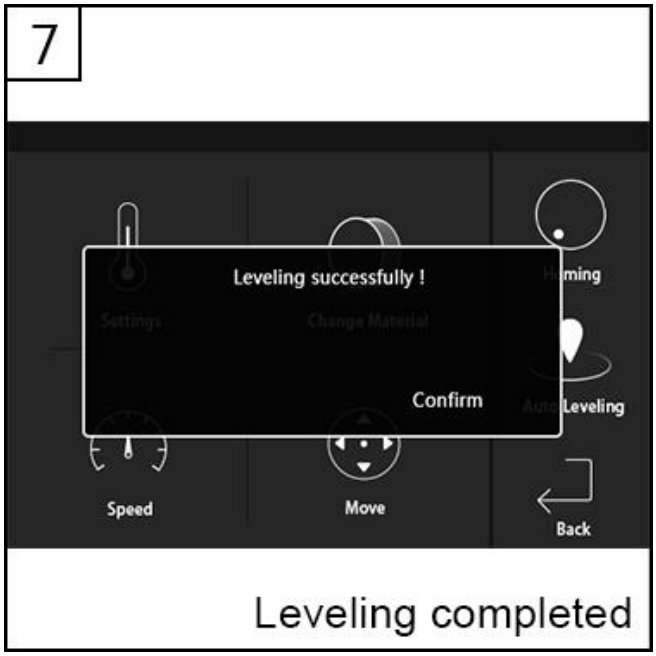

Note: If you are not satisfied with the result from auto calibration, you can enter into “Baby step” interface (1) , and then adjust the nozzle height by pressing “+” or “-” to adjust the nozzle height during print. If the nozzle is too close to the print bed, press “+”, otherwise, press “-”. **Long press “+” or “-“ to speed up the process, and this technic is also applicable to increase or decrease nozzle temperature.**

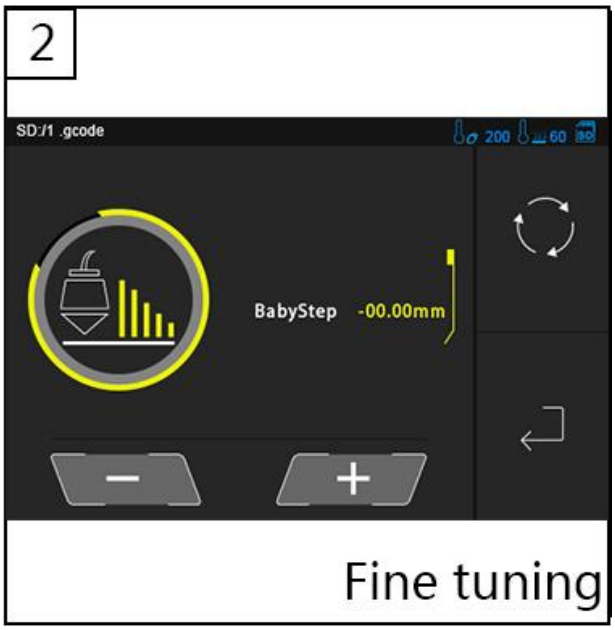

4.2 Auto Feeding

Unbox the filament, cut the end of the filament to a 45 degrees angle and make it straight (1). Press “More” on the main interface (2), then press “change filament” (3). Press “A” to heat up the nozzle (4). After finished heating, feed the filament to the extruder(5), and then press “A” again (4).

Note: a. Please make sure there is no filament inside Teflon tube before you use auto feeding function. If there is, please heat up nozzle and use tool to squeeze filament out beforehand.

b. It is normal to hear "click" sound from extruder when filament is extruding from nozzle, just wait for "Bi" sound, it means auto feeding finished.

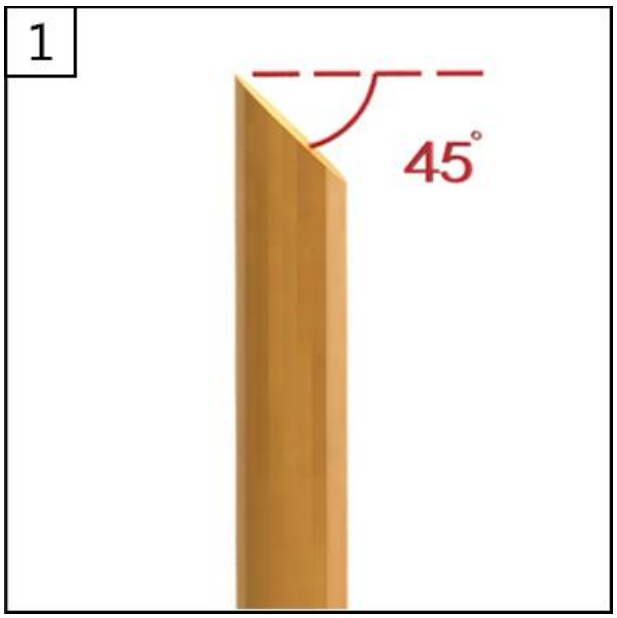

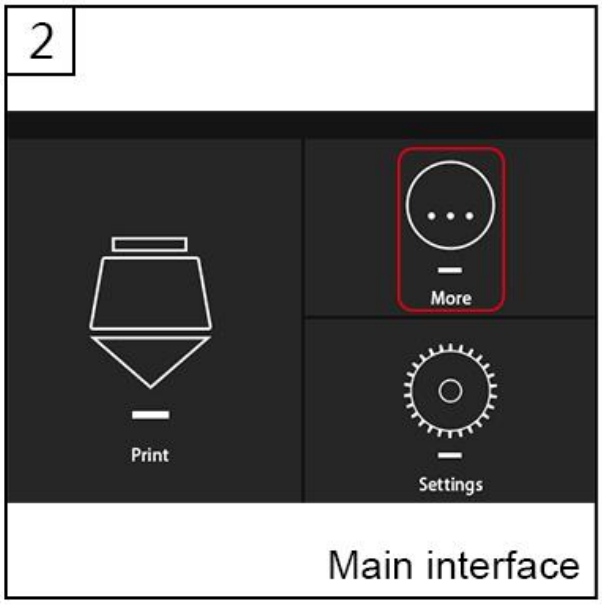

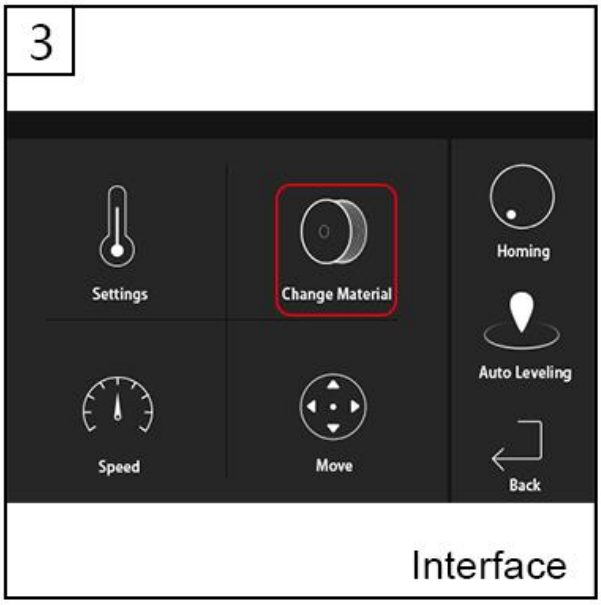

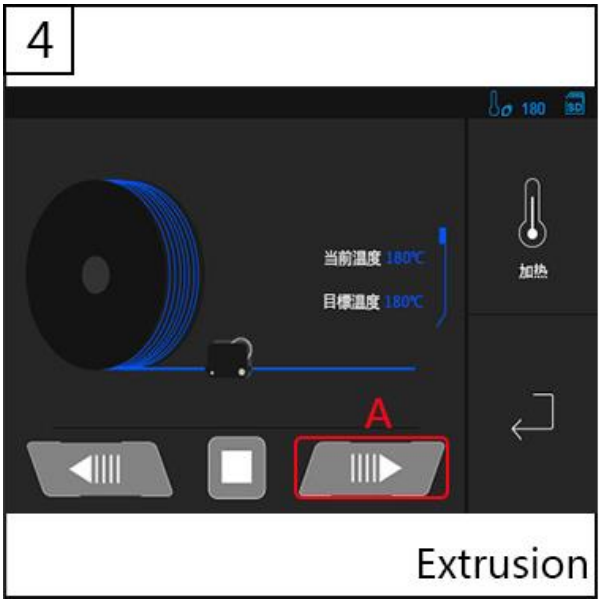

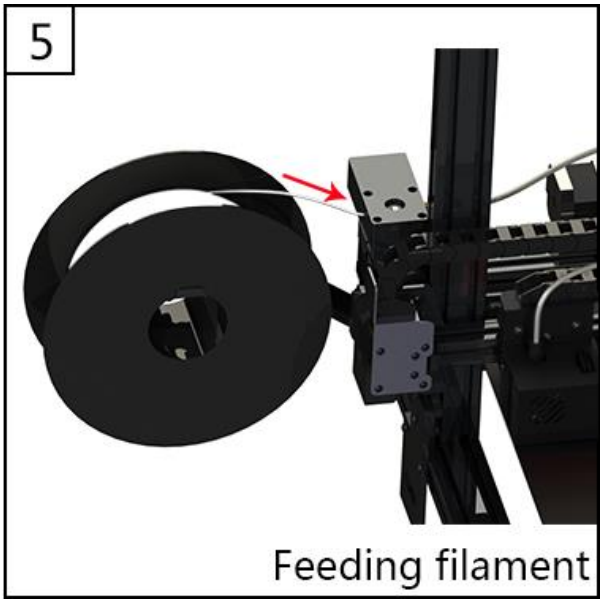

4.3 Printing

4.3.1 Insert the SD card, press “print”, select the model you would like to print.

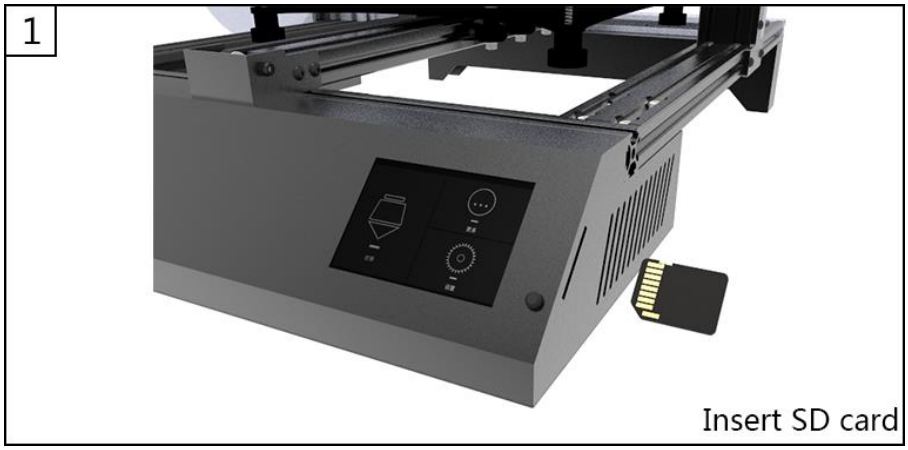

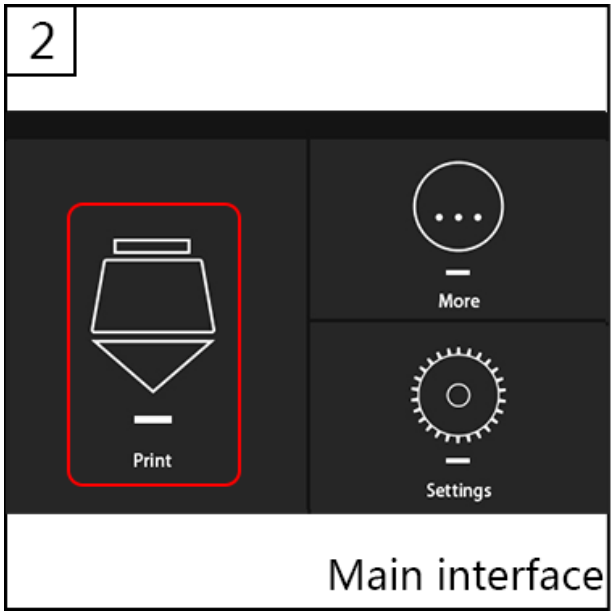

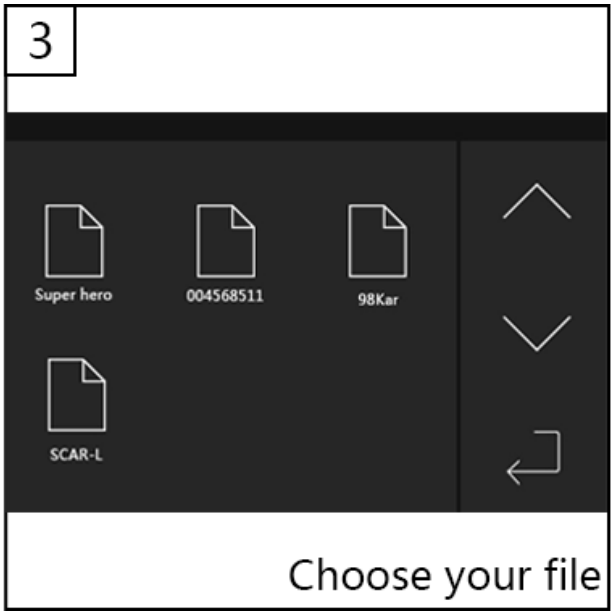

4.3.2 After the print is completed, wait for the nozzle, heated bed and print to cool down before taking the soft magnet bed out and remove your print.

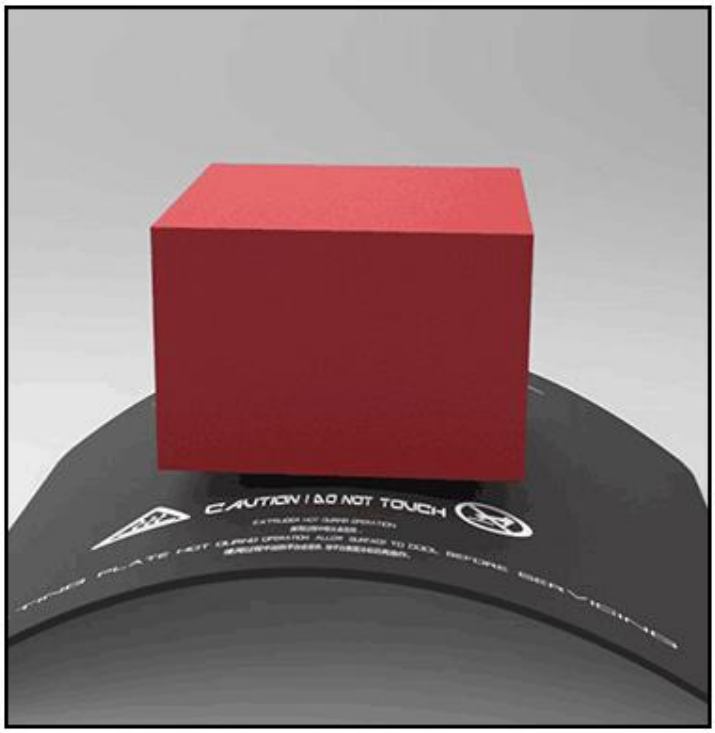

Five: Specification

Printer description	PLA 3D printer, entry level 3D printer, easy assembly, designed by BIQU
Slicer	Cura, Slic3r, Simplify 3D
Extrusion type	Bowden extrusion
Print material	PLA/ABS/TPE/TPU/Wood/Metal PLA/Metal ABS/Carbon Fiber/Glow-in-the-Dark Material
Max print volume	300*300*400mm
Filament diameter	1.75mm
Max print speed	100mm/s
Number of extruder	1
Stepper accuracy	X 0.012mm Y 0.012mm Z 0.004mm
Net weight	12.26kg
Total weight	16.2kg
Leveling	Manual & Auto leveling
Package size	735mm*520mm*295mm
Structure material	Metal
Layer height	0.1mm-0.4mm
Printing surface	Soft magnet bed
Resume printing	Non-trace resume after power off capable
LCD Screen	English/Chinese/Japanese

Six: Feature Overview

Soft magnet bed	Easy removed magnet heated bed
Power off after prints	Auto power off after prints are done, low power consumption, safe, longer life
Auto leveling	Auto leveling for better precision
Cloud app	Connect printer with your phone, remote control printer, online .stl file data base
Auto install and change filament	Easy to change filament
Filament jam detection	Smart detection on filament jam
Non-trace Resume print	3D printer can remember the print status if there is accident power off, and it can resume printing when power is on again

Note: If you used Auto OFF function for your last print, please remember to turn off power switch and then turn it on to run the printer again.

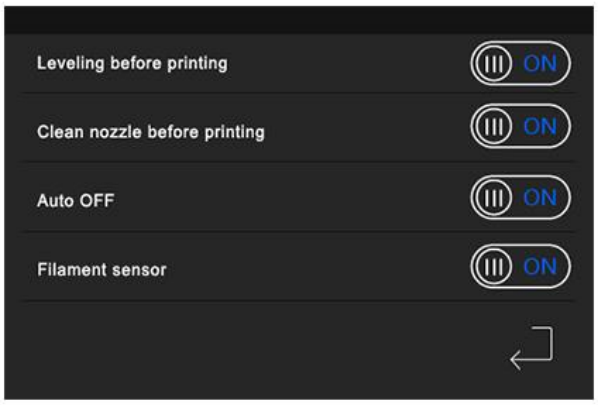

Feature interface

Navigate to Feature Interface

Method one: click “Settings” icon, then click “Function” icon

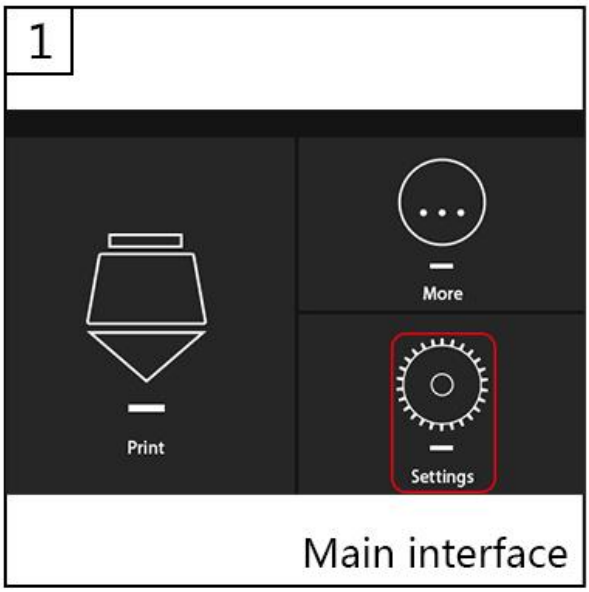

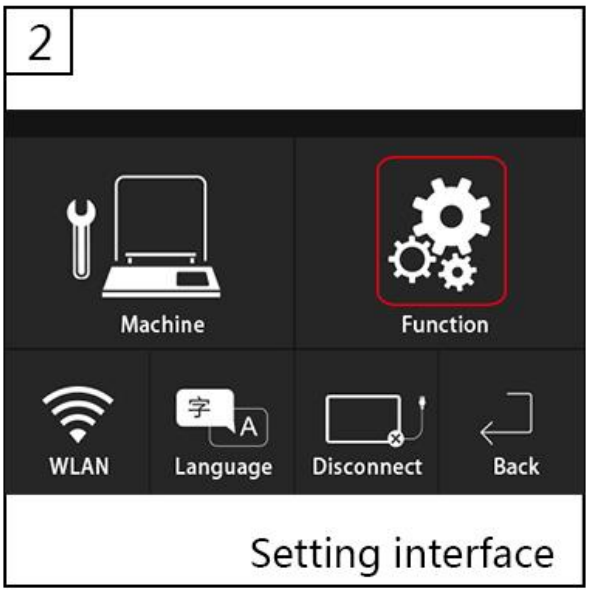

Method two: If the printer is printing, you can long press “more” on the printing interface to enter feature interface.

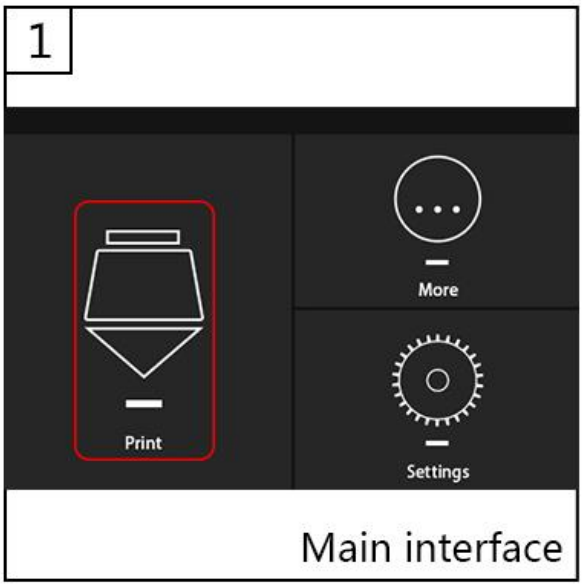

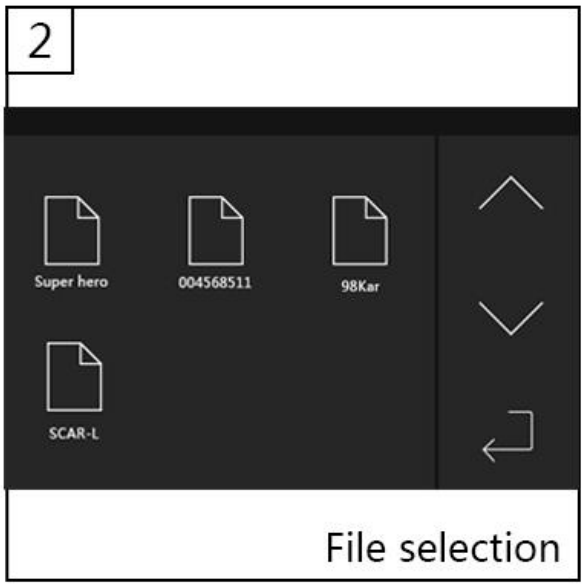

Seven: Smart Phone Connection

7.1 For Android, please download and install “MyMiniFactory” through Google Play; For IOS, please download and install “MyMiniFactory” through App Store.

7.2 Click on the mobile phone to enter the software, fill in the user information and check the agreement to register the account, return to the login interface to fill in the account and password to log in, click the small icon in the user interface, select "Connect 3D printer", add the printer.

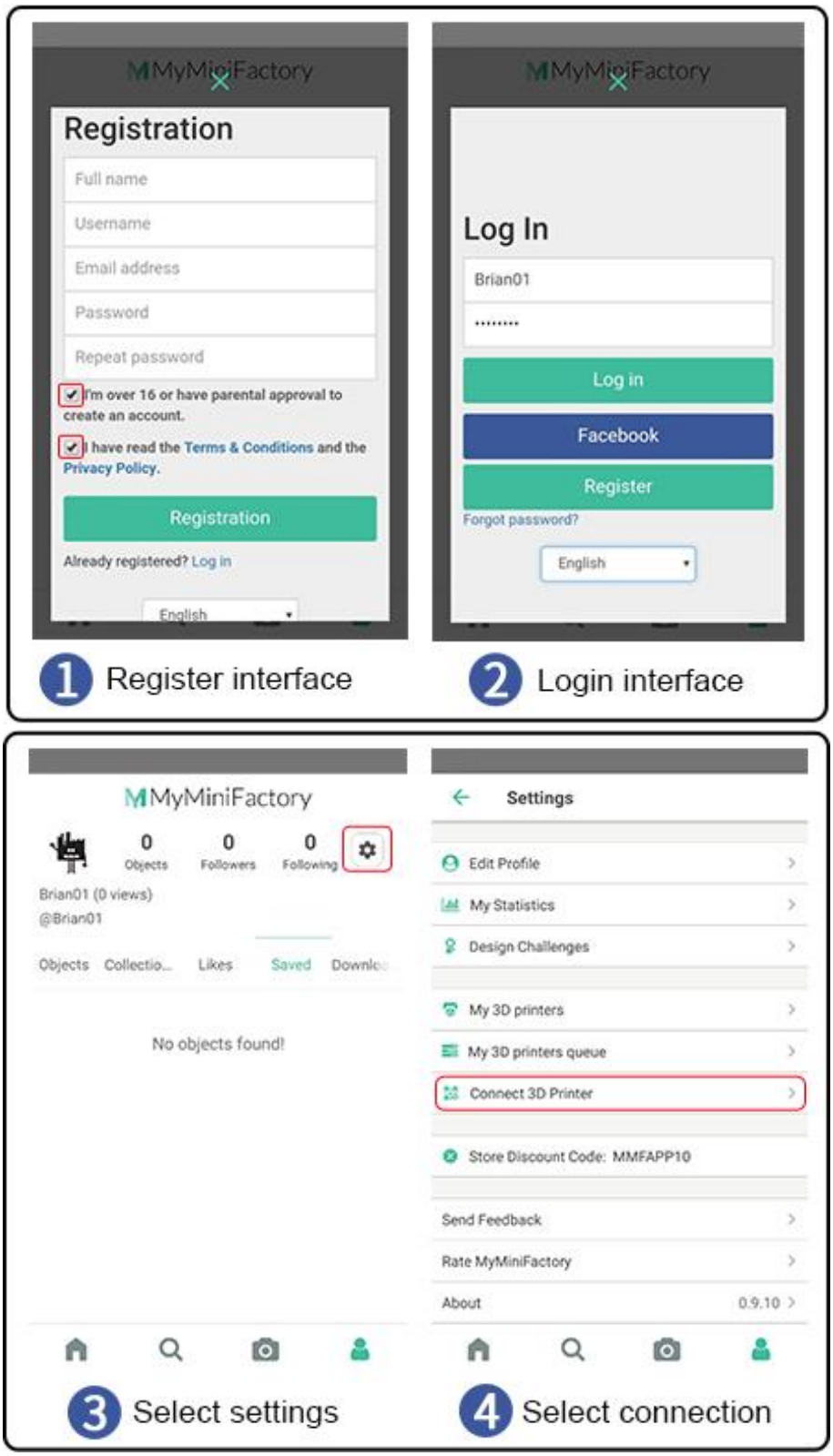

7.3 Click "+" to scan the QR code to add 3D printer. Click "Settings" - "WIFI" on the main interface of the machine, select Connect to WIFI, enter the password to confirm the connection, then click the icon "MyMiniFactory" to pop up the QR code, the phone is aligned with the machine. The QR code on the scan completes the connection.

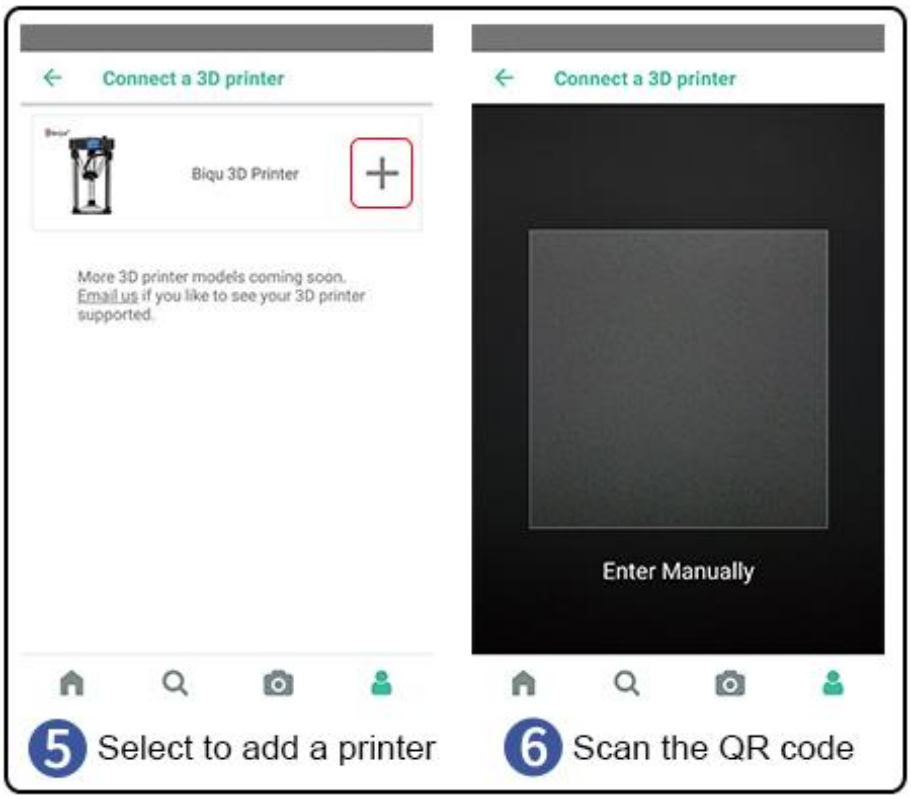
Connect a 3D printer
Biqu 3D Printer
More 3D printer models coming soon.
Email us if you like to see your 3D printer supported.
Connect a 3D printer
Enter Manually
5 Select to add a printer
6 Scan the QR code

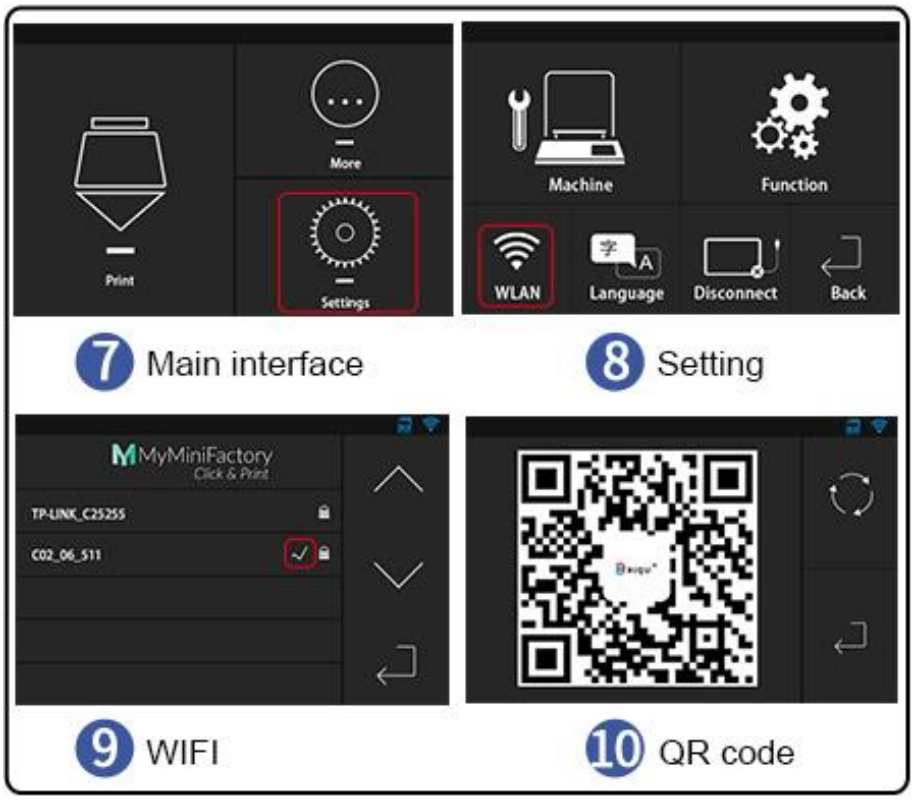
Print
More
Settings
Machine
Function
WLAN
Language
Disconnect
Back
7 Main interface
8 Setting
MyMiniFactory
Click & Print
TP-LINK_C2525S
C02_06_S11
9 WIFI
10 QR code

7.4 Confirm that the mobile app is connected to the printer, display the idle state, select the model to slice on the home page, click “print”, select the idle machine, and click “PRINT THIS OBJECT”.

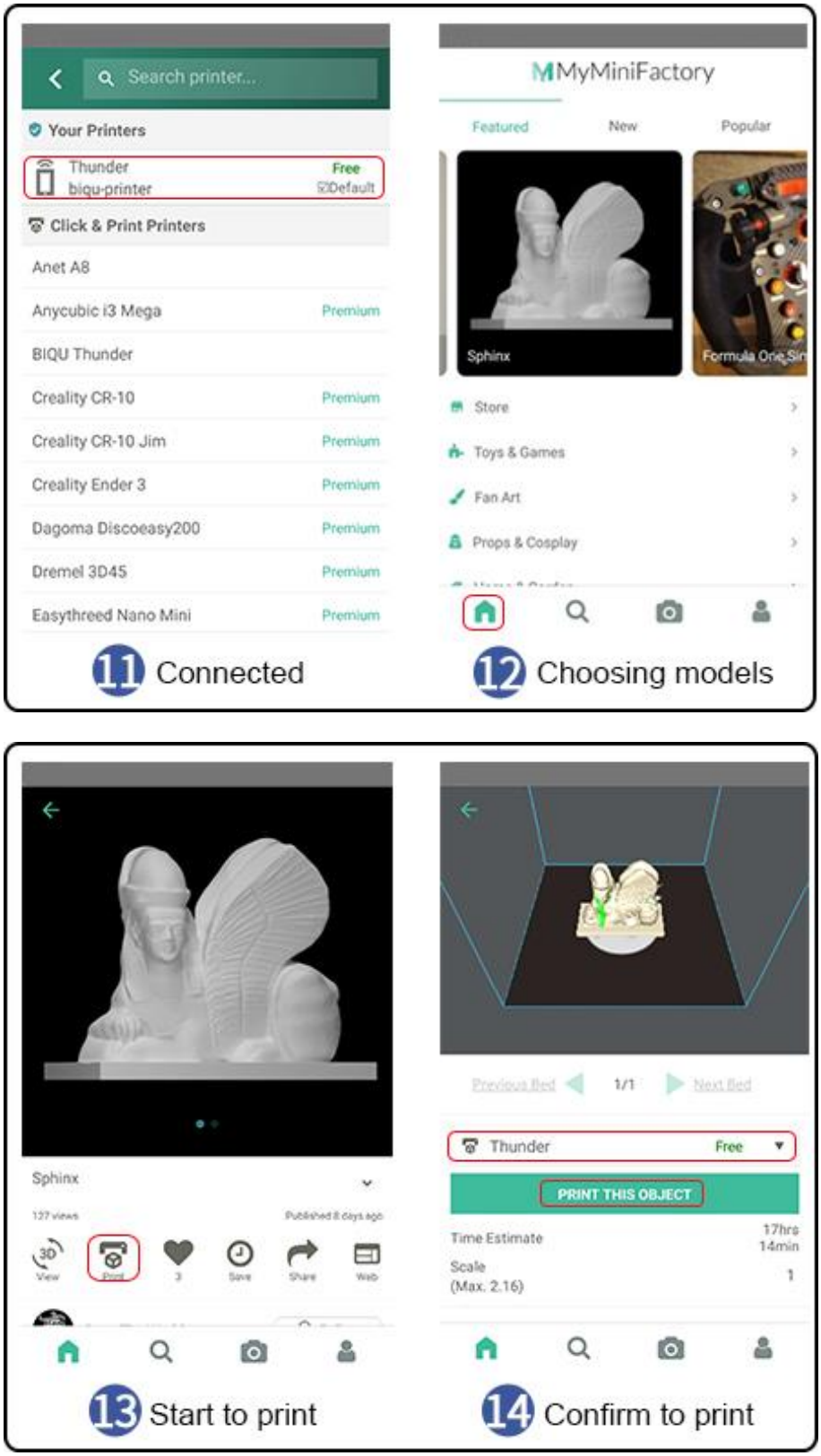

7.5 Click “print” and wait for the task being sent to your printer.

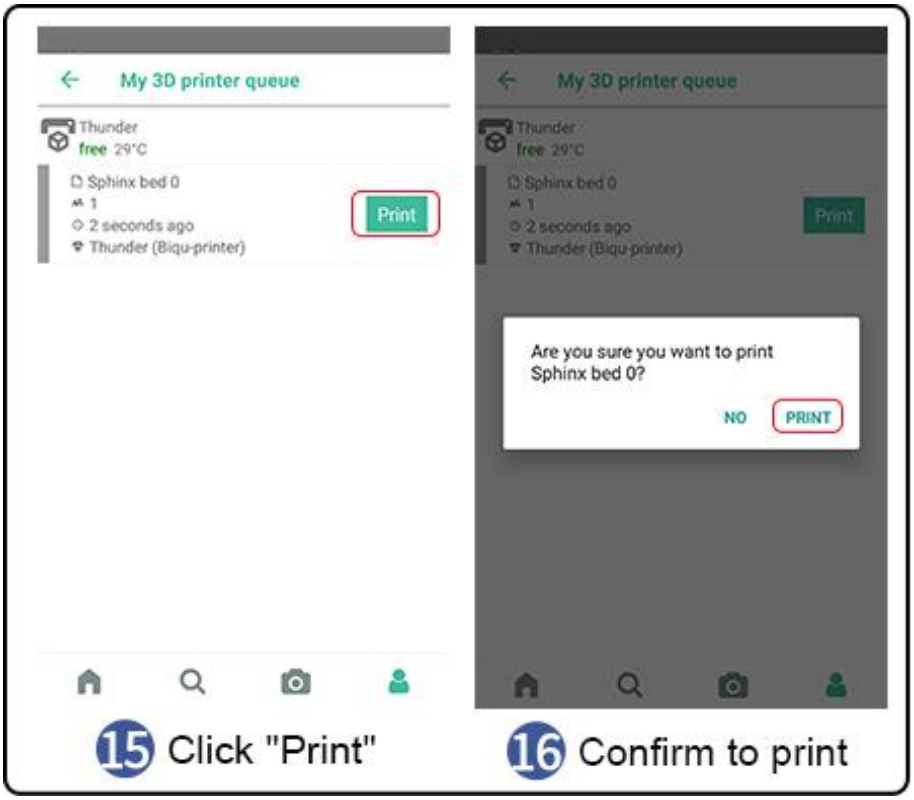

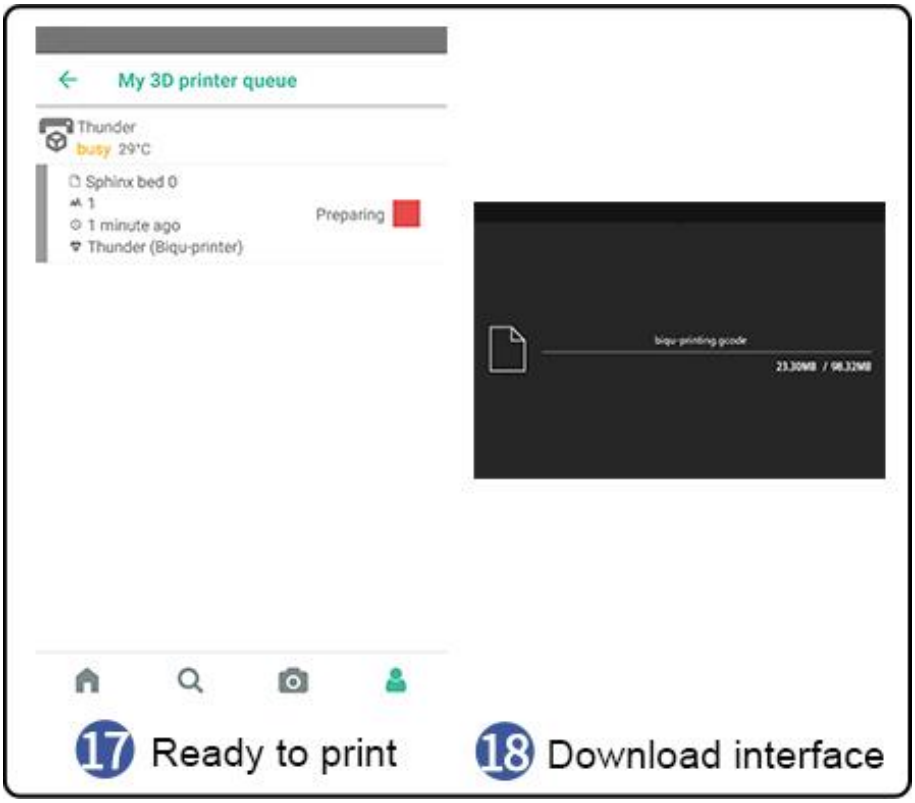

Eight: Slicer

Read SD card and open file “Slice software” and find file “Cura”, and then double click to install Cura. Check all the components to maximize the recognizable format range.

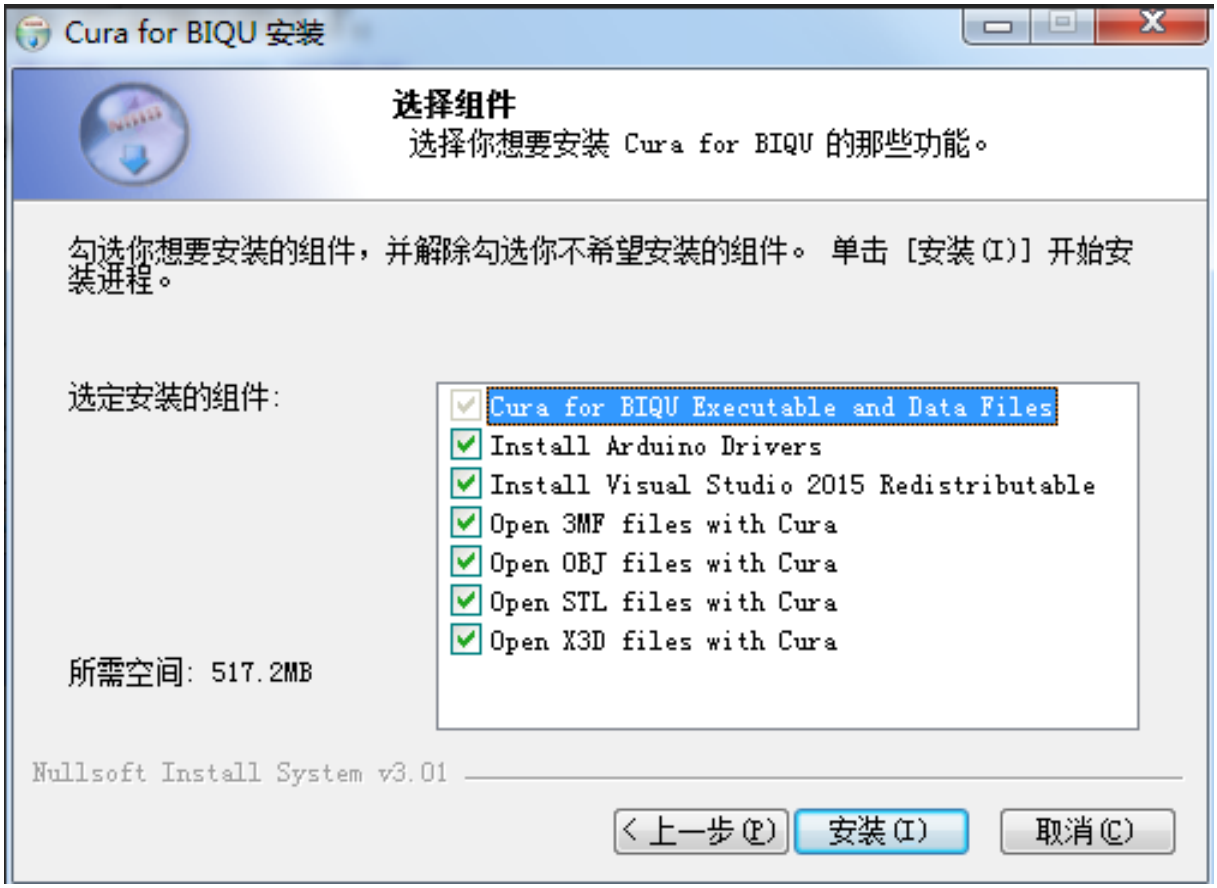

Software installed. When you run Cura, you will see a pop-up window, just click “Add Printer” at the lower right side to finish the Machine Settings for BIQU-Thunder.

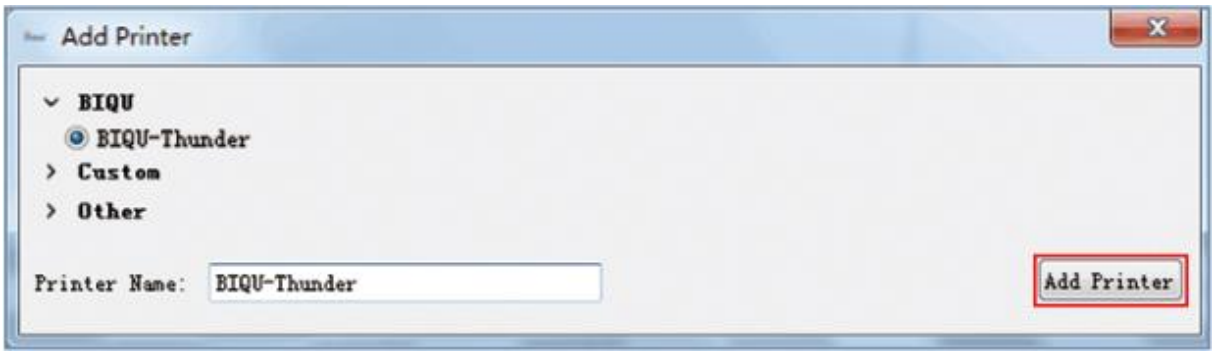

For your reference, the below picture is the standard printing configuration for BIQU-Thunder. User can follow it and modify some configuration based on the actual situation.

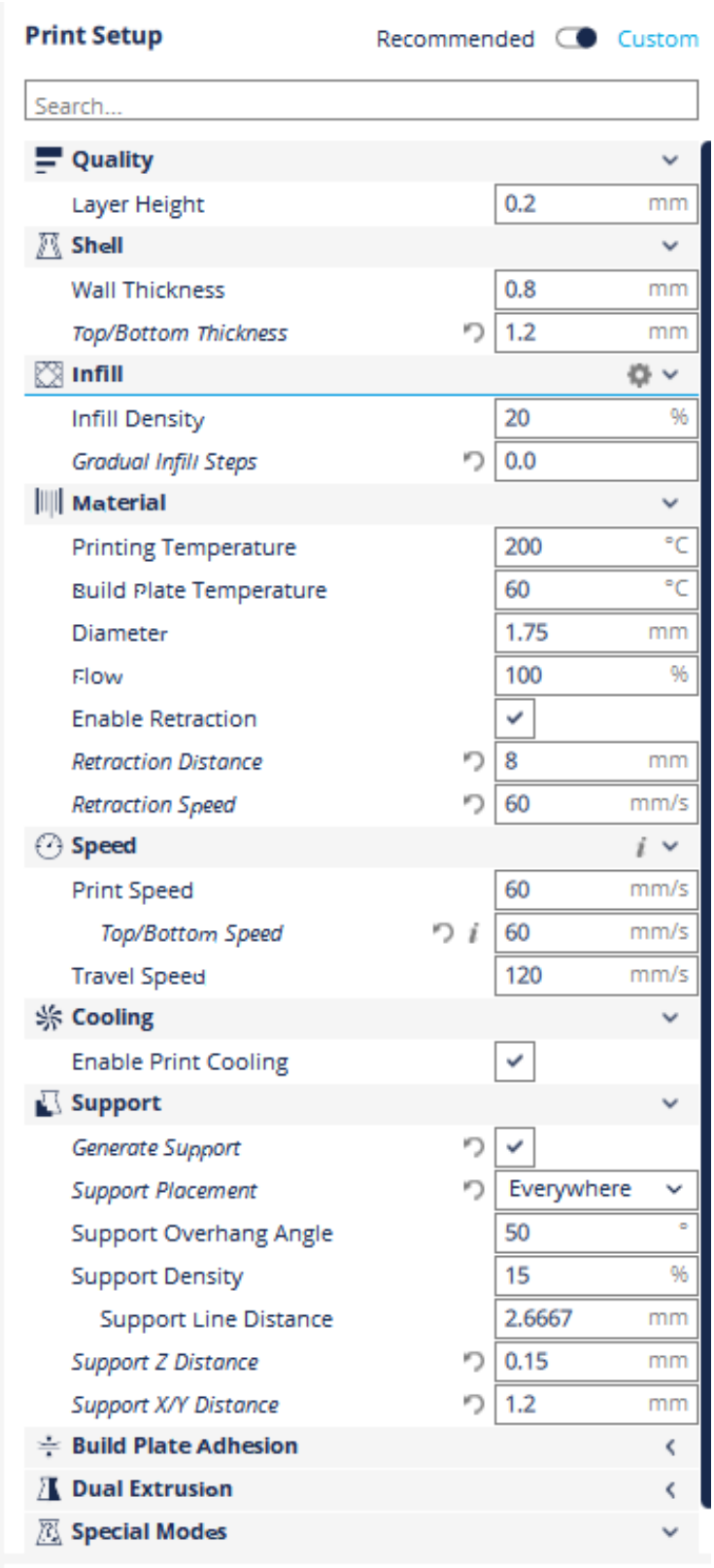

After software is installed, user can import print model file to slice and generate printable Gcode file. Click “File” icon and choose “Open File” to import model.

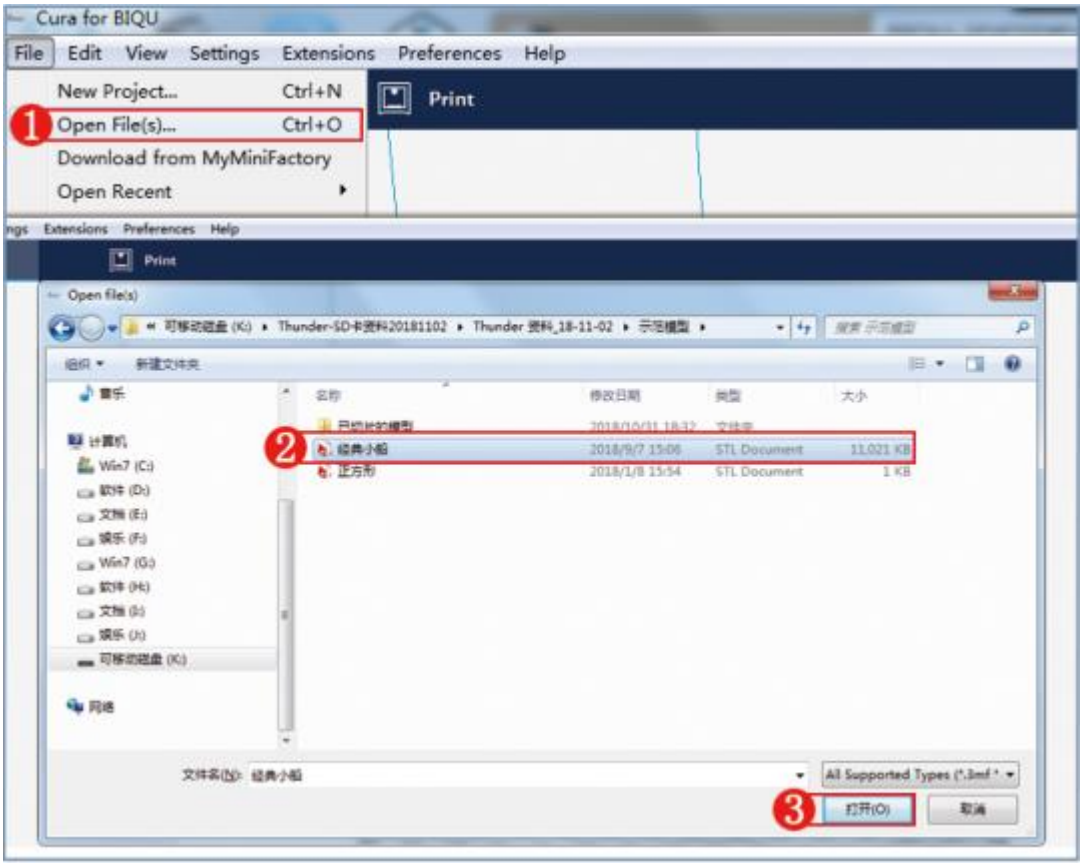

The red area in the model is a notification to add support. Start adding support by clicking “Support Placement”, and choose “Everywhere”, and then click “Prepare” to start slicing.

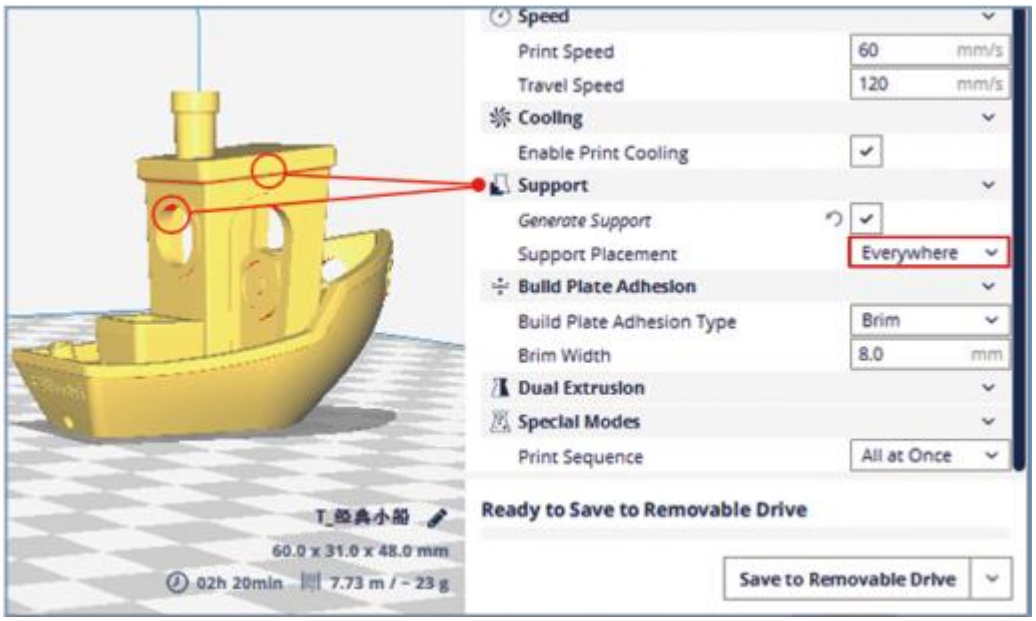

After slicing is finished, insert SD card and save the print file.

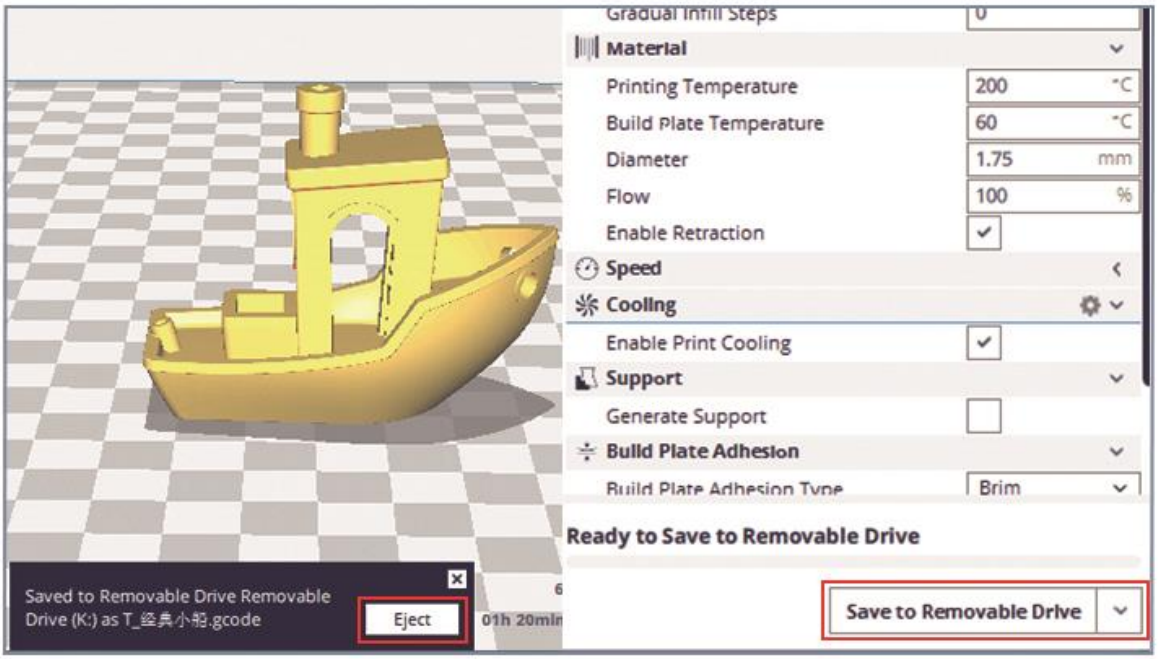

Note:

1. Layer height: it stands for the height of single layer. With smaller layer height, you will get higher print quality but longer print time; with bigger layer height, you will get shorter print time but lower print quality. Choose to print with 0.2 mm layer height to guarantee print time and print quality.

2. Wall thickness: it is usually the common multiple of the nozzle diameter, ex 0.4mm, 0.6mm, 0.8mm and 1.0mm. Thicker the wall, stronger the print. If you want to reduce the print time, consider printing with a thinner wall.

3. Top and bottom thickness: set them to be 0.6mm – 1.00 mm in general. We recommend that the top and bottom thickness to be the same as wall thickness and be the common multiple of the layer height.

4. Infill: Less infill will save you time and material, recommend to use 20% infill.

5. Print speed: usually range from 40mm/s to 80mm/s, higher speed, short print time and lower printer quality.

6. Print temperature: set the temperature according to the material you are using. 180°C - 210°C for PLA, 210°C - 240°C for ABS. set the nozzle at an appropriate temperature will make your print looks better.

7. Heated bed temperature: set the temperature of the heated bed to be 50°C - 80°C so that the print will stick to the print bed better.

8. Support: inspect your model, see if there is anywhere that is not touching the build plate, if so, add support to support your print. If there is anything hanging internally, add support from the model to get a successful print.

9. Filament diameter: typical 3D printer filament has two sizes, 1.75mm and 3.0mm in diameter. If you are using 3.0mm diameter filament, choose 2.85mm or 3mm.

10. Retraction: retract setting greatly affect your print quality. Insufficient retract speed and retract distance would cause stringing on the surface of your print. If they are too high, the nozzle tends to stay near the surface of the print for a long time, which will also lower the print quality. We recommend and retract distance of 6mm and retract speed of 80mm/s.

The information above is for reference only. Adjust the setting according to your specific print.

Nine: Connect and Print

9.1 Repetier-Host Installation

Find the file in the SD card, unzip the folder, and double click to install

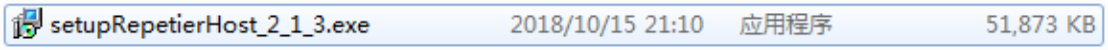

In the setup screen, select the options as shown in the picture. You are installing the format file that Repetier-Host can recognize (1). Select, and click next to install (2).

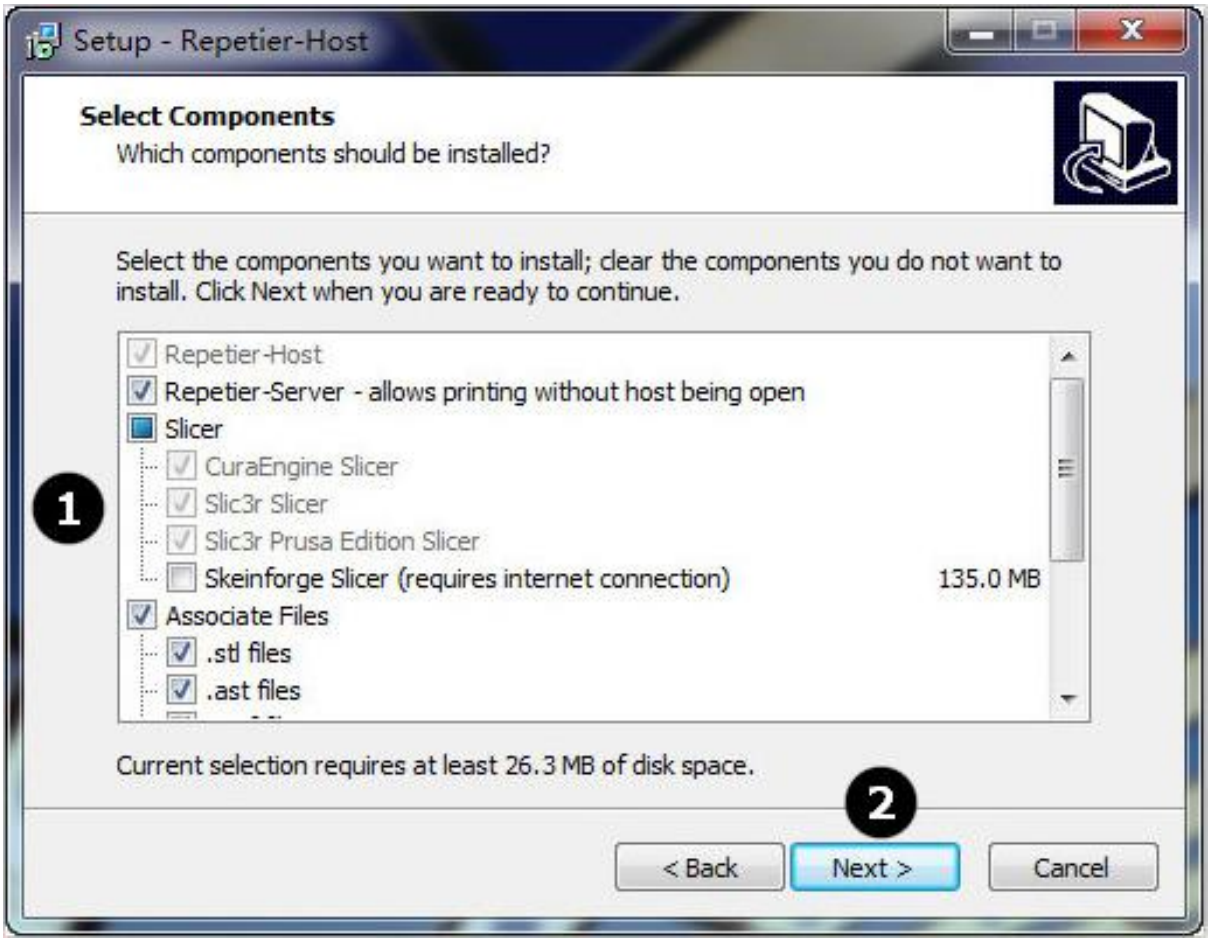

After installation, check the privacy policy (1) check box and click confirm (2).

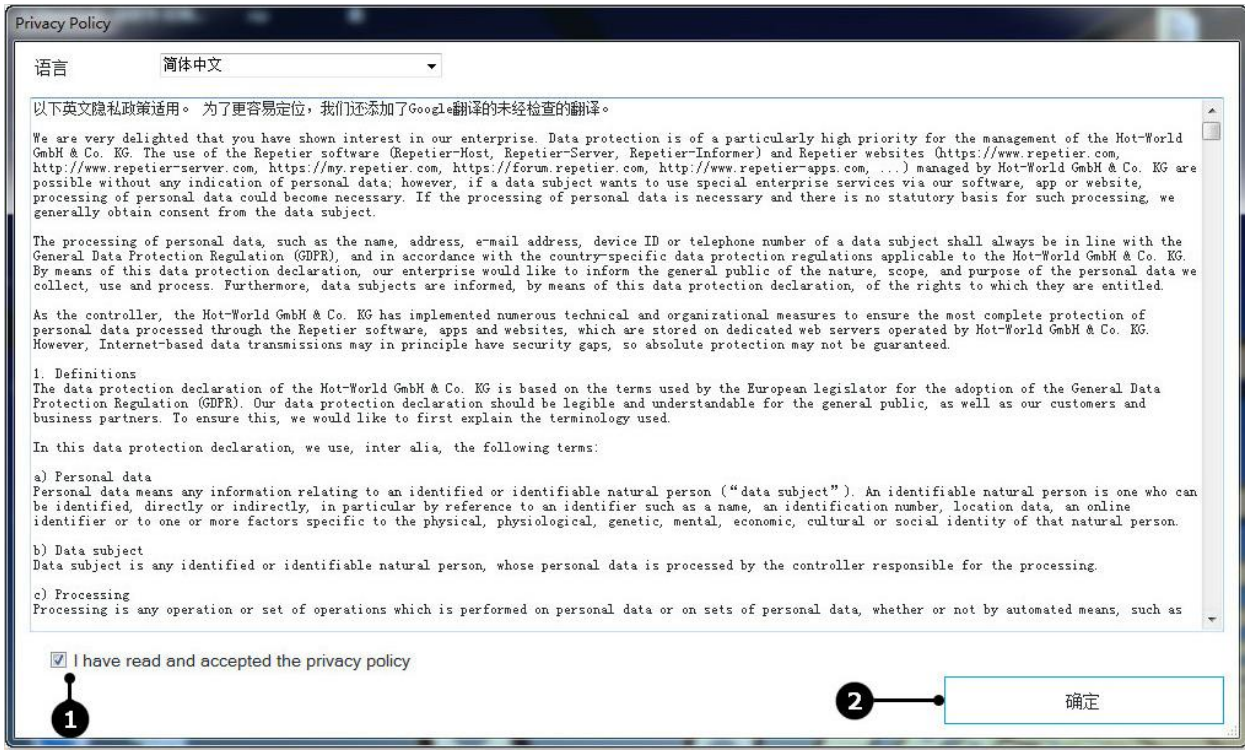

9.2 Connect Printer with Repetier-Host

Step one: Press setting on the main interface of your printer and choose "disconnect" as shown in the picture.

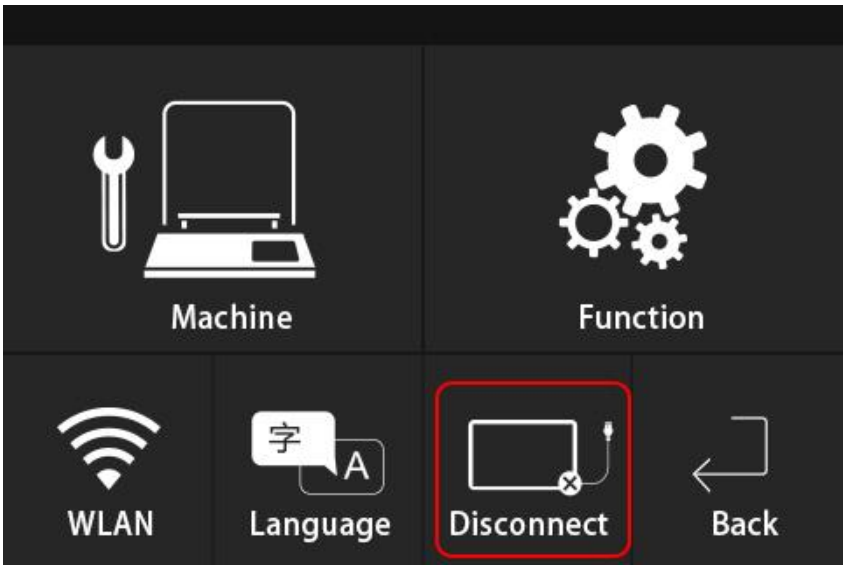

Step two: Use the USB cable to connect your computer with your printer, connect the USB B end (“D” shape end) to your printer and USB A end your computer.

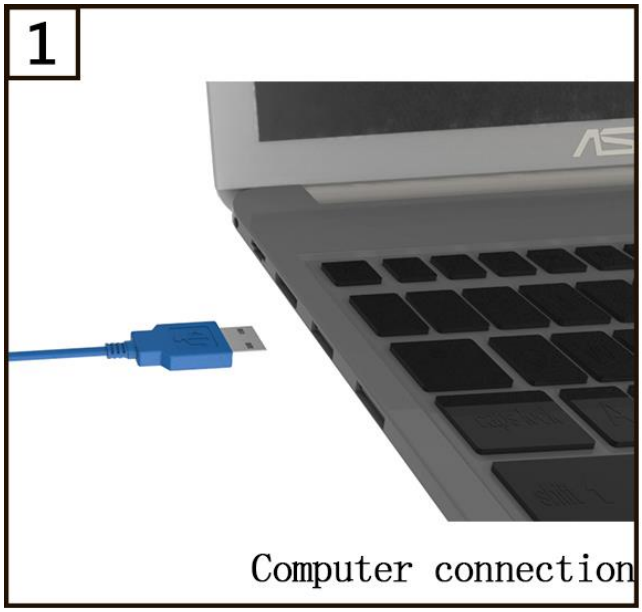

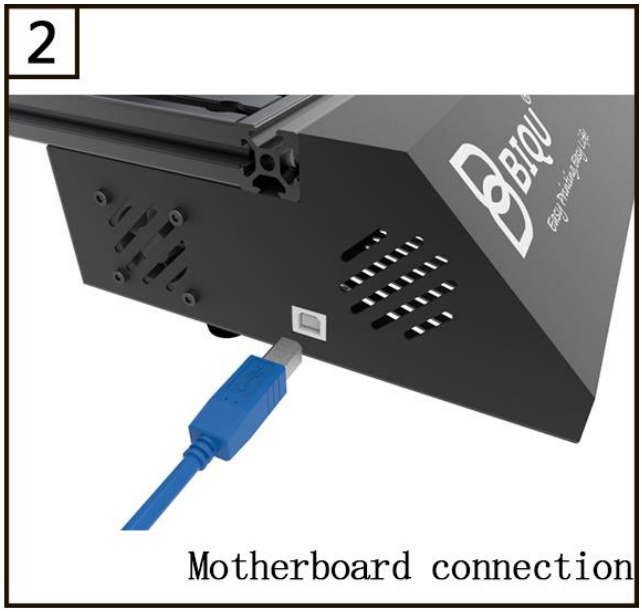

Step three: Open the software, click “connect” on the upper left (1) to connect the printer to your computer.

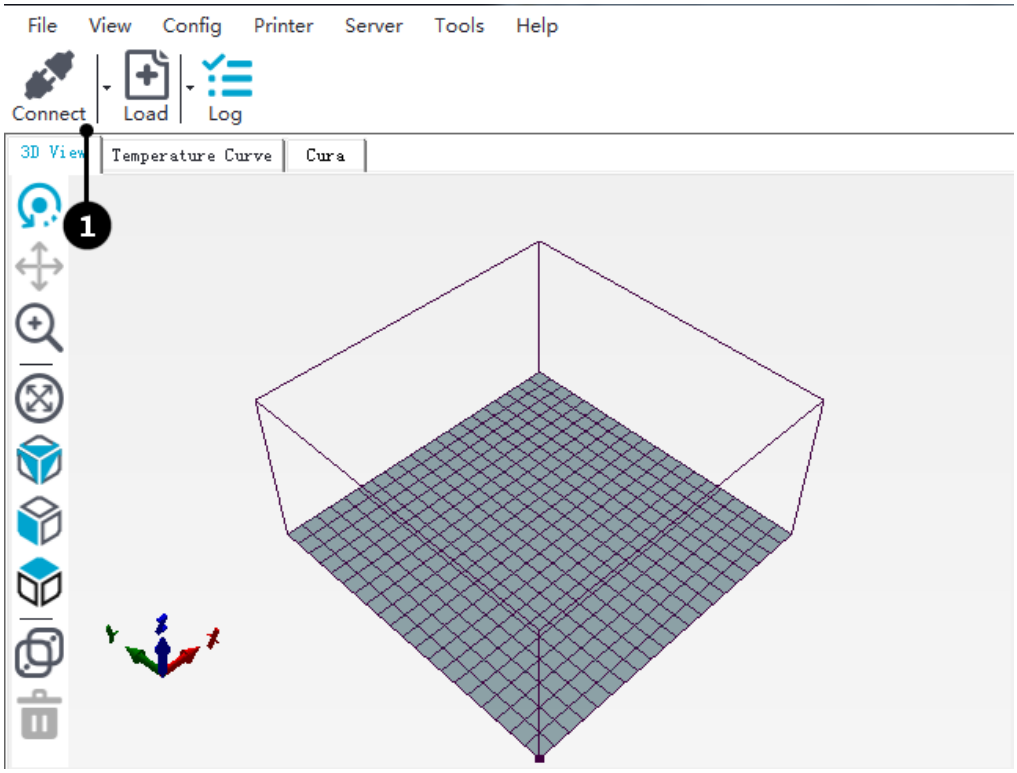

Click Config (2)

Choose printer setting (3)

Select port, baud rate, and transfer protocol (4)

Check and use Ping-Pong communication (5)

Click OK (6)

The icon on the upper left will become blue when connect successfully (1)

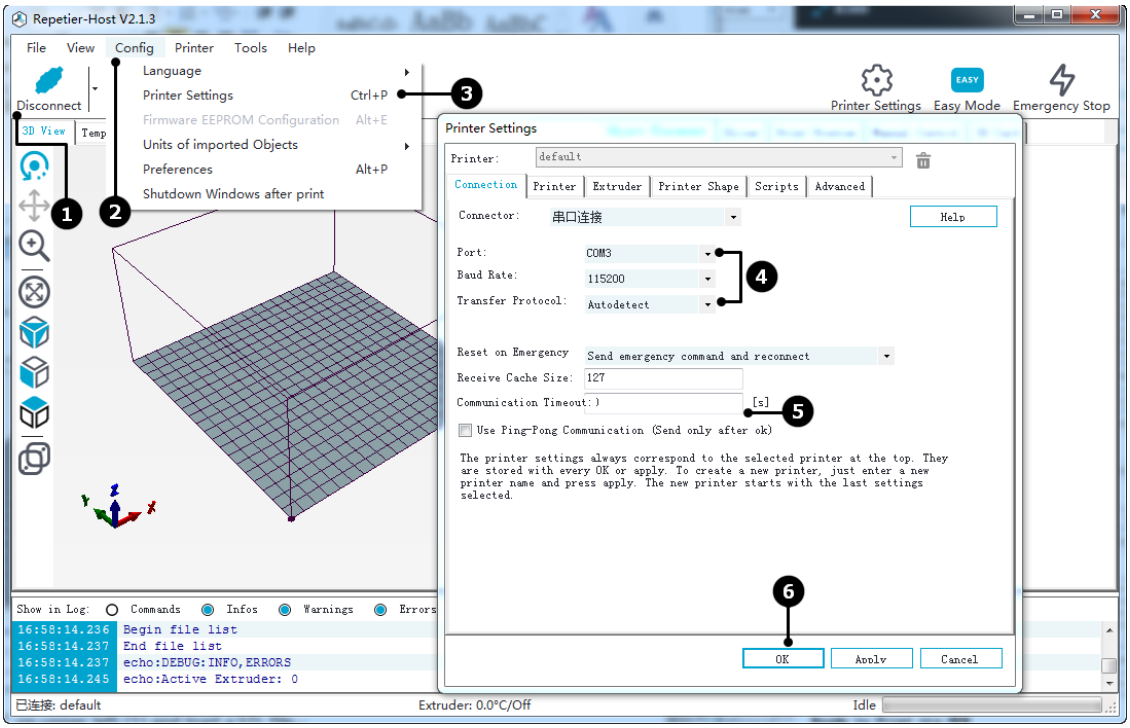

Step four: click “load” on upper left (1) and load a STL file.

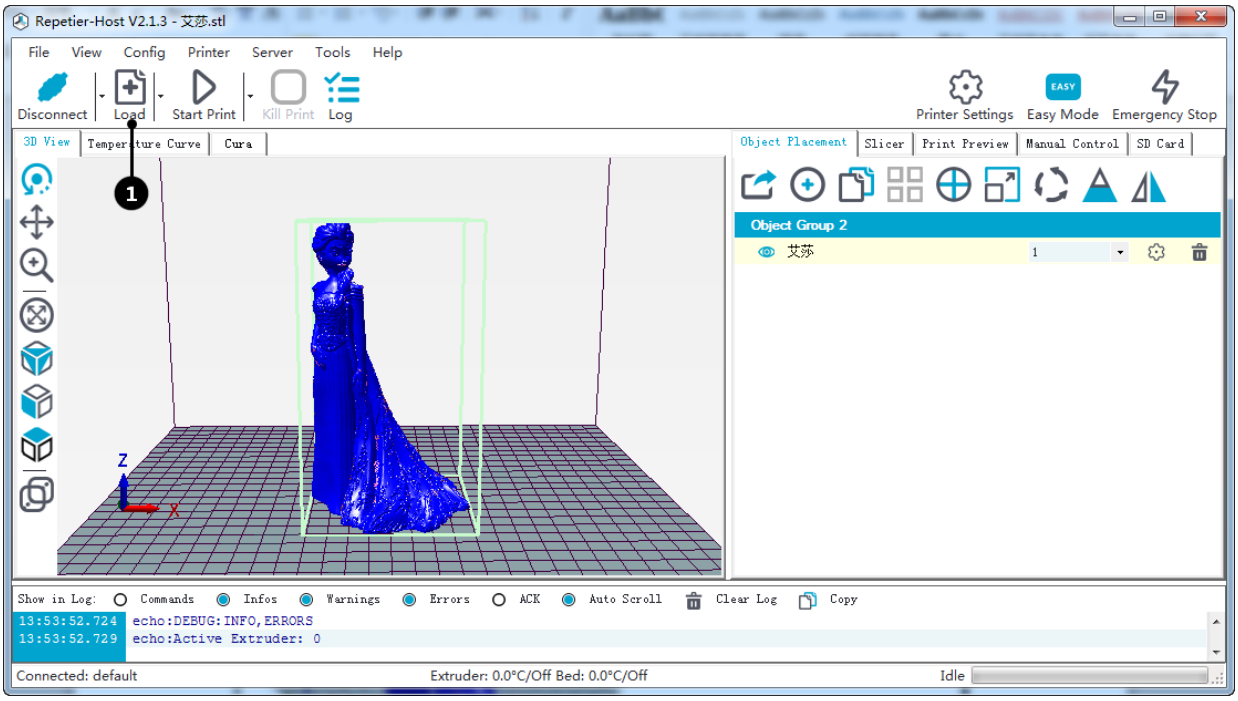

Step five: after loading the file, you can re-orientate your model in x y and axis (1)

Reset rotation (2)

Lay flat (3)

Save as (4)

Add a model (5)

Copy a model (6)

When you are printing multiple models, use this feature to arrange your models (7)

Center and arrange your models (8)

Adjust the size of your model when it exceeds print volume (9)

Slice the model. You can use this feature to control the slice surface and angle to change the result. The portion that is removed is not going to be printed. (11)

Change which way the model is facing (12)

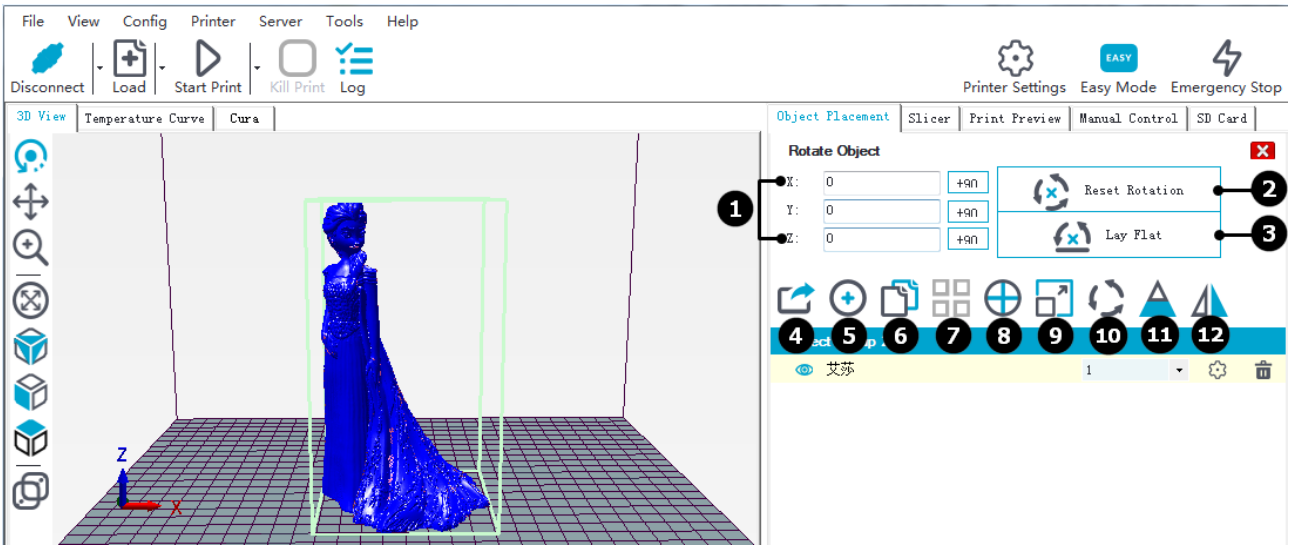

Step six: After done adjusting the model, we can start slicing the model. Choose Cura or Slic3r (1) and click configuration. Close the setting tab, click “Slice” and wait for it to complete.

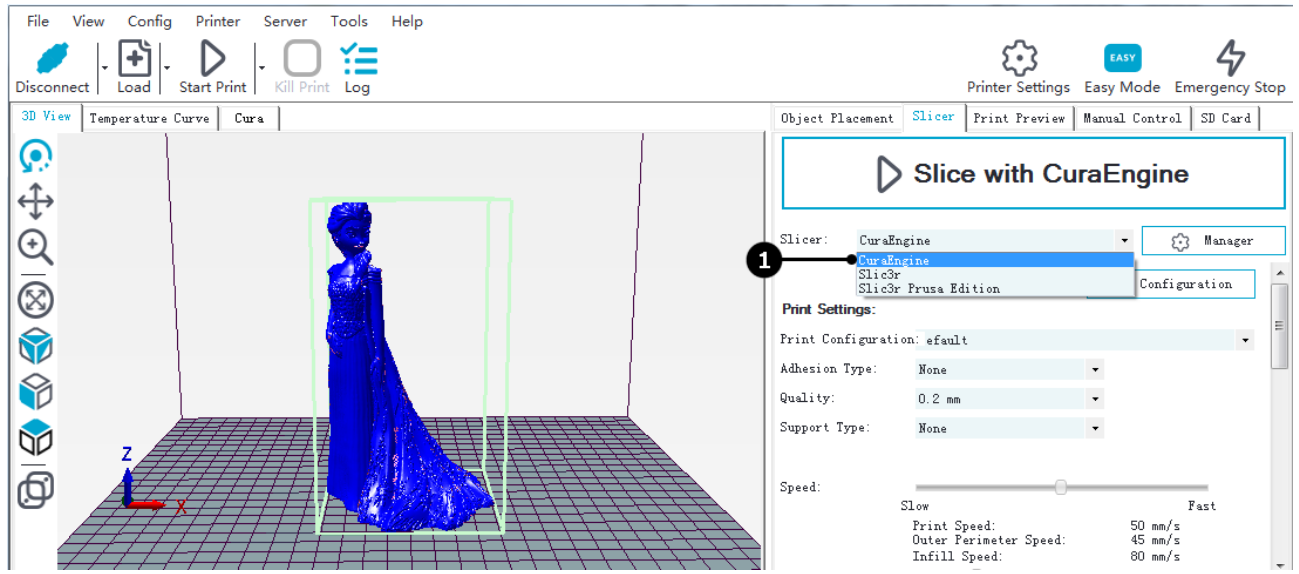

Step seven: After done slicing, hit “print” (1) and start to print, you will see the model on the platform at this moment. You will see the estimated print time, cost of material and the number of layers (2).

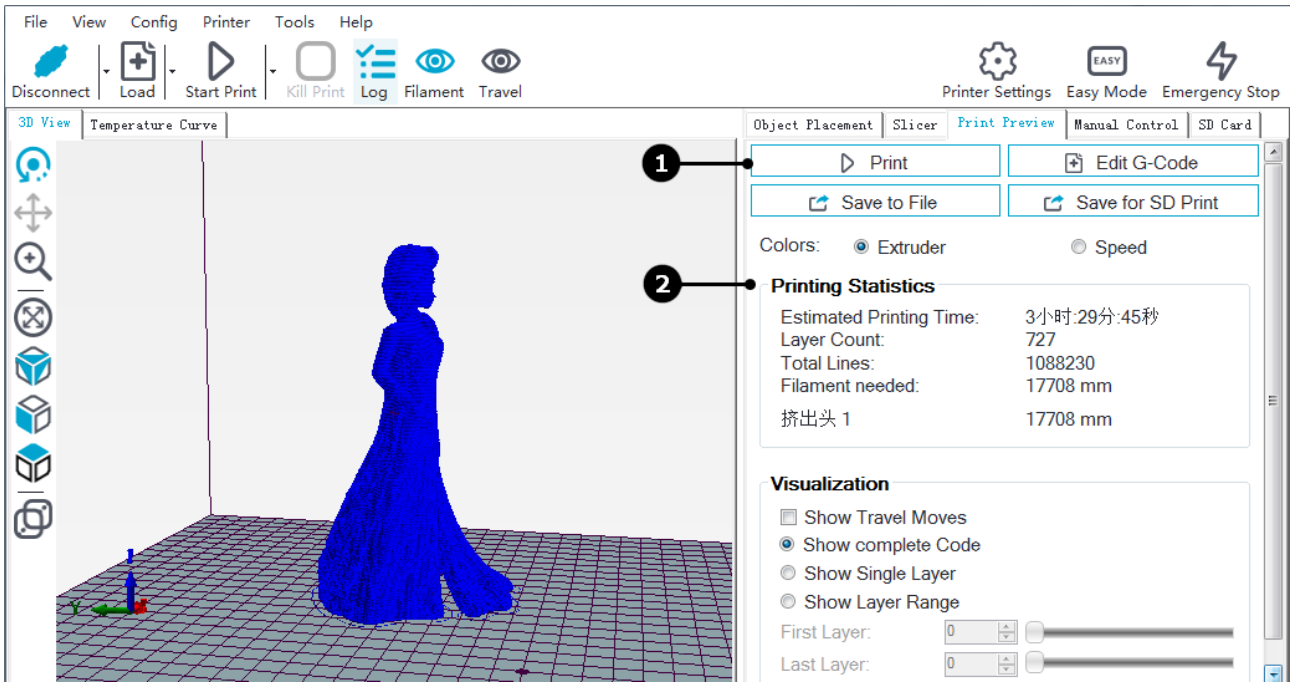

Ten: Trouble Shooting

Question 1	layer shifting
Answer 1	Print speed is too fast, change your print speed to 30mm/s – 60mm/s.
	The bell pully or bell might be loosened. Tighten them up.
	The Stepper motor is missing steps. The current through the motor might be too small so that the stepper motor doesn't have enough torque. Increase the output voltage from the stepper driver to increase the power of the stepper motor.
	The stepper, stepper driver and the power supply might be overheated. Overheating might affect the performance of steppers.

Question 2	Filament leak
Answer 2	The nozzle is not tightened. Heat up the nozzle and remove the filament before tightening the nozzle with a plier. Do not touch the heated nozzle with your hand!

Question 3	Difficult to install filament
Answer 3	Straighten the end of the filament with your hand, and cut the very end of the filament to a 45 degrees angle with plier
	The screw on the extruder is too tight, slightly loosen it.
	Filament jam in the white filament tube, heat up to 220 degree and remove the jam filament

Question 4	Bobbling on the top of the print
Answer 4	Insufficient cooling is possible, make sure the fan is working.
	Top layer height is too thin, increase top layer height in your print setting.

Question 5	Inconsistent extrusion
Answer 5	Check and see if the filament is jammed
	Check and see if there is a nozzle jam
	Double check if you are using the correct layer height and filament size setting
	You might be using low quality filament that would often breaks.

Question 6	Stringing
Answer 6	Change the retraction distance and retraction speed.
	Adjust the retraction setting by 1mm each time and compare the result.
	Try lowering the print temperature by 5 degrees each time.
	Lower the travel distance. Lower the distance between each model if you are printing multiple models a time.

Question 7	Computer can not recognize the printer

Answer 7	Install a STM chip driver

Question 8	Corner lifting
Answer 8	The nozzle is too far away from the print bed, adjust the nozzle height. If the nozzle is too close and the nozzle is scratching the print bed, press “+” to increase the height; If the nozzle is too far away and the print is not sticking to the bed, press “-“ to lower the nozzle height.
	Adjust the nut under the print bed to adjust the height of the print bed.
	Make sure you print at close environment with consistent temperature.
	Lower your print speed, leave enough time for temperature change.
	Increase extrusion for the first layer.
	Apply PVP glue on the print bed.

Question 9	Alarm during print and printer stop printing
Answer 9	The diameter of the filament is inconsistent, change a need filament.
	Nozzle is jammed, clean it with a needle or replace it with a new nozzle.
	Adjust the torque of the extruder stepper.
	Filament runs out already. Install new filament.

Question 10	Cracks and Gaps in 3D prints
Answer 10	Insufficient extrusion. Double check and see if there are any loosen parts in your printer.
	Make sure the diameter of your filament is consistent.
	Add some machine/motor oil on the rail to ensure the print bed and extruder can slide smoothly.

Eleven: Important Information

1. To prevent scalds, please don’t touch the nozzle or the heated bed when the printer is printing.

2. Please don’t touch the magnet bed immediately after a print is done, wait for the hot plate to cool down before taking the print out.

3. Place the printer on top of a rigid body, otherwise, print quality might be affected.

4. Don’t place your hand inside the printer, avoid getting slam or pinch by the printer.

5. Don’t use the printer over 100 hours continuously, otherwise, the machine might overheat and cause damage.

6. For safety, people under 18 must be supervised by adult when using the printer.

7. Don’t place the printer near flammable substance. Place your printer at a ventilated, clean and cool environment.

8. Follow the user manual carefully. Disassemble or modify your printer without permission might cause damage to your printer, and the user will be responsible for all the causes.

EASY PRINTING,EASY LIFE!

BIQU®

SHENZHEN BIGTREE TECHNOLOGY CO.,LTD

FCC WARNING

This device complies with part 15 of the FCC Rules. Operation is subject to the following two conditions: (1) this device may not cause harmful interference, and (2) this device must accept any interference received, including interference that may cause undesired operation.

Any changes or modifications not expressly approved by the party responsible for compliance could void the user's authority to operate the equipment.

NOTE: This equipment has been tested and found to comply with the limits for a Class B digital device, pursuant to Part 15 of the FCC Rules. These limits are designed to provide reasonable protection against harmful interference in a residential installation. This equipment generates, uses and can radiate radio frequency energy and, if not installed and used in accordance with the instructions, may cause harmful interference to radio communications. However, there is no guarantee that interference will not occur in a particular installation.

If this equipment does cause harmful interference to radio or television reception, which can be determined by turning the equipment off and on, the user is encouraged to try to correct the interference by one or more of the following measures:

-- Reorient or relocate the receiving antenna.

-- Increase the separation between the equipment and receiver.

-- Connect the equipment into an outlet on a circuit different from that to which the receiver is connected.

-- Consult the dealer or an experienced radio/TV technician for help.

To maintain compliance with FCC's RF Exposure guidelines, This equipment should be installed and operated with minimum 20cm distance between the radiator your body: Use only the supplied antenna.