LOCKLY®

REV：6.0

ERP机型：PL35G2UQ-GL-SMT00010A-V1 ERP P/N：

描述:安装指引:PL35G2UQ/PGD1128FPW,SMT000,REV.G（MPGD1128FPW20210721）,
196*196MM,128G双粉纸,双面4C+2专(2915C+7540C),印刷过哑油,12页24面装订本+封底面,
(封底面为折叠页，展开尺寸：784x196mm),ROHS2.0,REACH,POPS,PAHS,PROP65

C M Y K Die Line

7540C 2915C

Designed：Sunny Date:2021-07-21

正面

Connect with us

@meetlockly | #LOCKLY

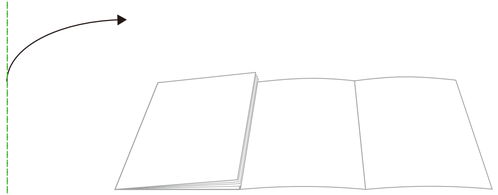

Reference installation parts overview foldout.

LOCKLY VISION™

We're here to help!
Email: help@LOCKLY.com

For the most up to date version of this guide please visit:
LOCKLY.com/help

IMPGD1128FPW20210721

LOCKLY VISION™

INSTALLATION GUIDE

DEADBOLT EDITION

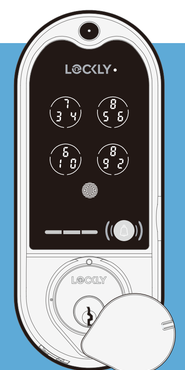

Welcome!

This guide will walk you through step-by-step how to install and get your LOCKLY Vision™ up and running. Installation generally takes less than 30 minutes. If you have any questions please reference our online support at: LOCKLY.com/support or call (669) 500-8835 for help.

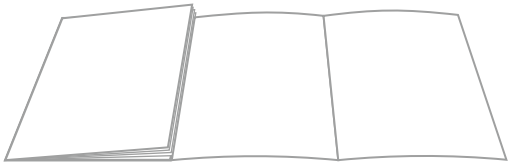

Reference installation parts overview foldout on back page

Preparation

To complete the installation you will need:

Phillips Screwdriver

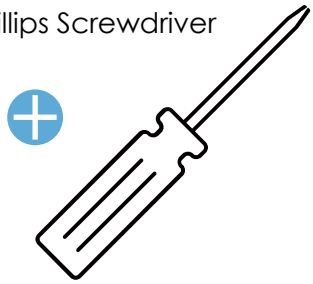

Flathead Screwdriver

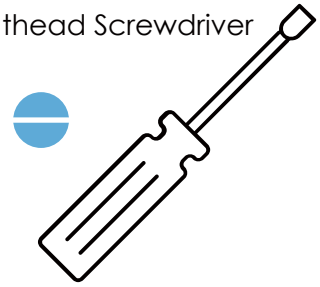

Tape measure or ruler

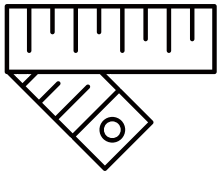

Prepare door: remove existing deadbolt or use provided template to bore new holes.

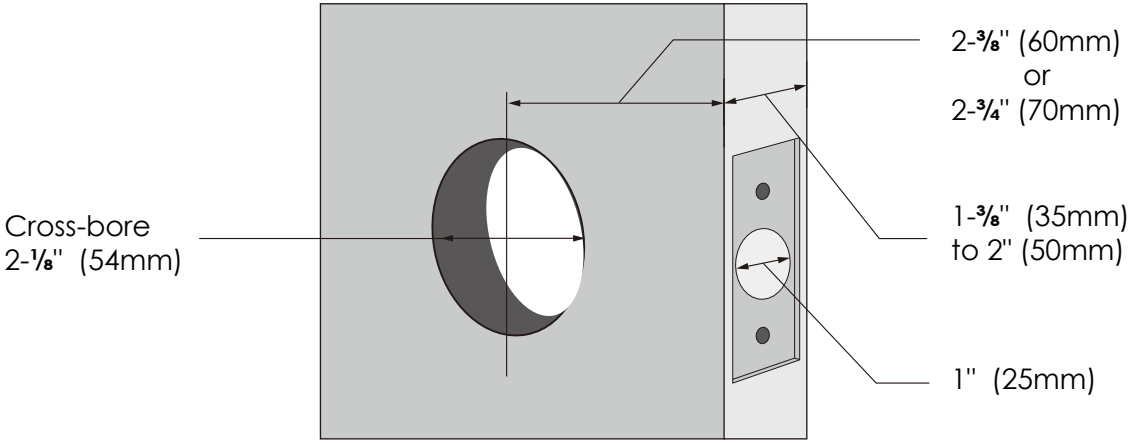

CAUTION: lock contains electrostatic-sensitive (ESD) parts. Best practices: ground yourself by touching a metal surface other than lock to discharge any ESD you might have; don't wear clothes prone to static (ESD); avoid touching electronic internal pins and circuit board.

Step 1

ADJUST DEADBOLT AND INSTALL

Deadbolt slot must align to the center of the door hole. Adjust as shown if needed.

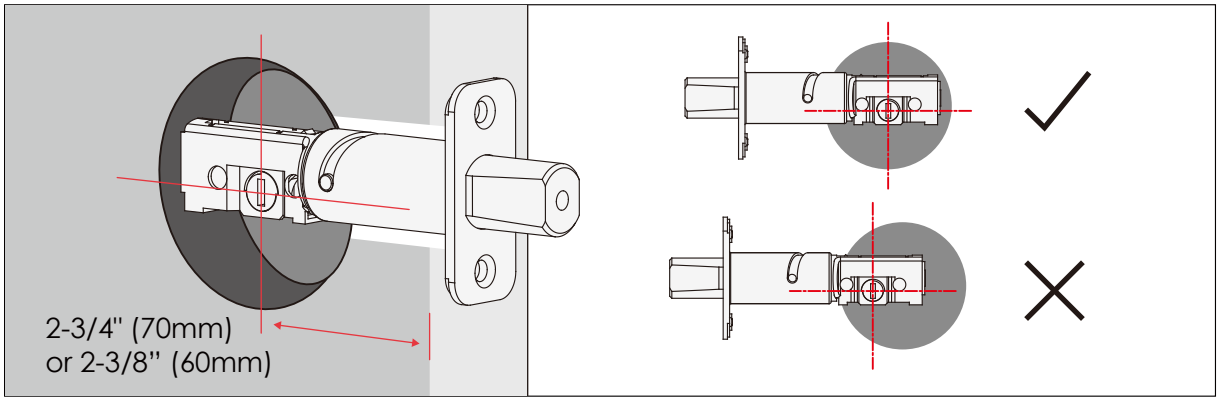

The deadbolt comes set to 2-3/4" (70mm). Adjust length to 2-3/8" (60mm) if necessary. (wear gloves to protect from possible pinching).

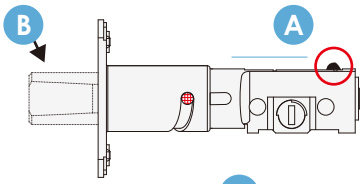

Push the crank A to extend the deadbolt B

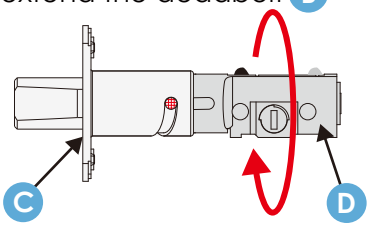

Hold the metal plate C and twist the deadbolt body D clockwise till it snaps to 2-3/8"

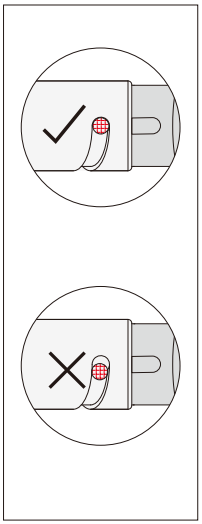

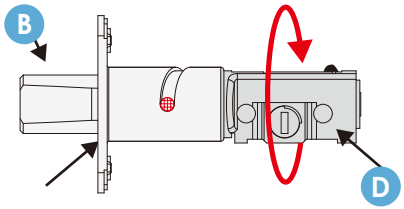

Deadbolt comes set at 2-3/4" (70mm). To return to default, while deadbolt B is extended, hold the metal plate C and twist the deadbolt body D counter-clockwise till it snaps to 2-3/4"

ADJUST DEADBOLT AND INSTALL

Extend the deadbolt by inserting a flat-head screwdriver into the slot and turning clockwise.

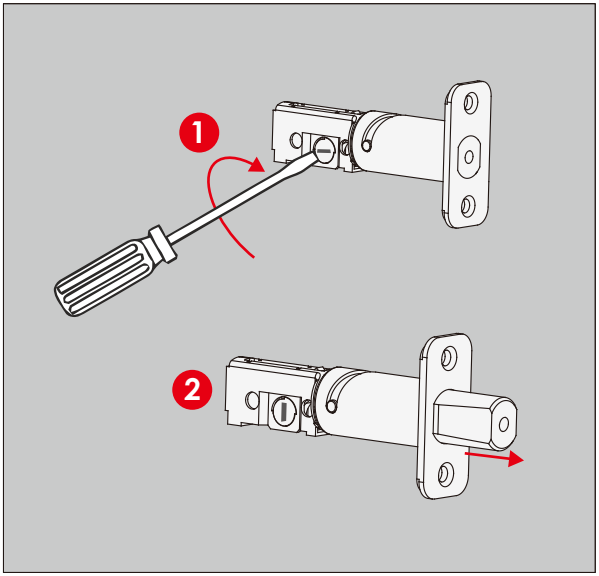

Insert the deadbolt into mortise flush with door edge, make sure that the right side is up and the slot is in the vertical position. Secure with 2 K screws.

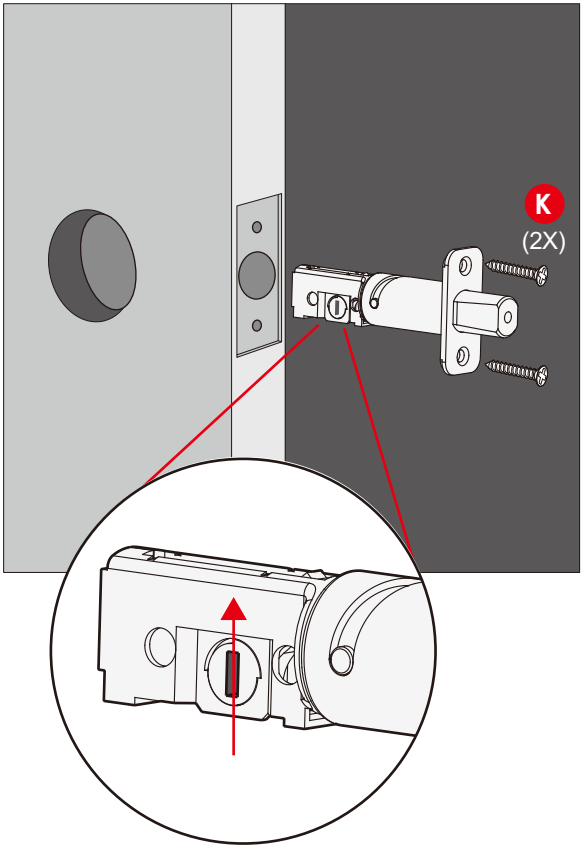

Step 2

INSTALLING EXTERIOR ASSEMBLY (B)

Check the exterior assembly (B) alignment to door hole and deadbolt before peeling off film on adhesive strips.

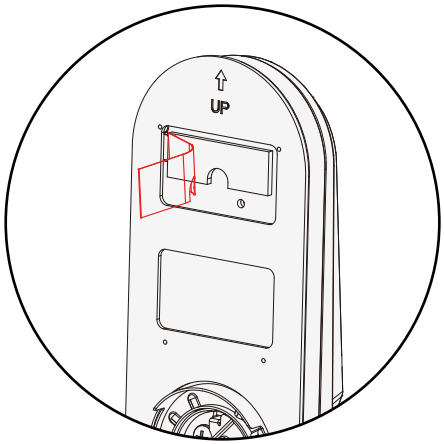

Peel film from adhesive strips and make sure torque blade is in the vertical position with the deadbolt extended. Place assembly and torque blade through the deadbolt slot and guide connection cables through the cross-bore hole under the deadbolt as shown. Complete mounting by aligning and securing until flush to exterior door surface.

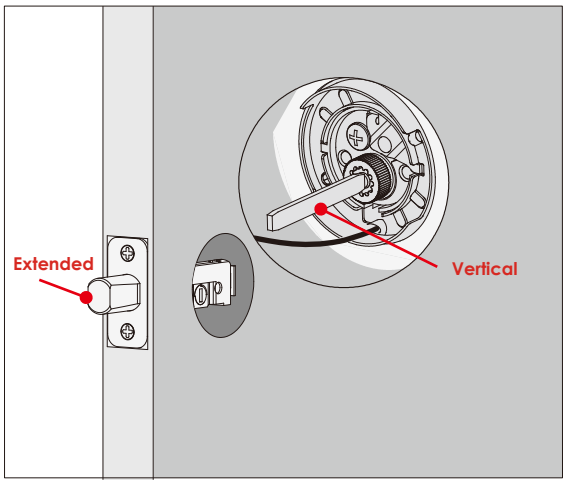

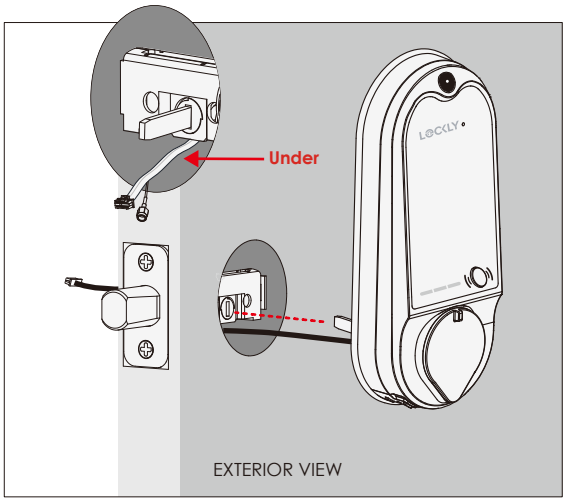

Step 3

INSTALLING INTERIOR ASSEMBLY (G)

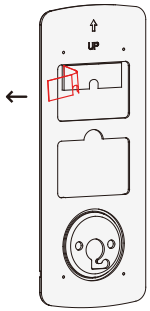

1: Check interior mounting plate (K) alignment to your door hole before securing with adhesive strips.

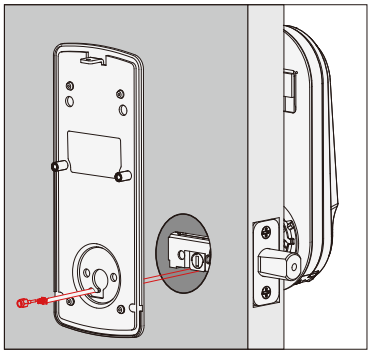

2: Align and secure mounting plate with adhesive strips. Guide connection cables through the hole and secure to the lower left notched hole.

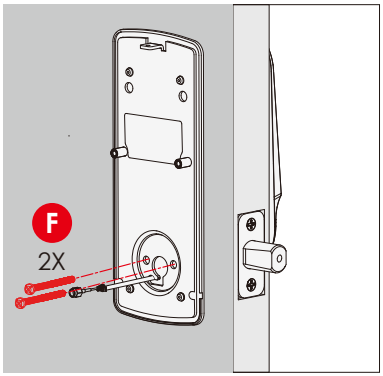

3: Insert and tighten by hand 2 F screws located on the left and right of the blade. Check alignment and tighten with screwdriver until mounting plate is securely placed on door.

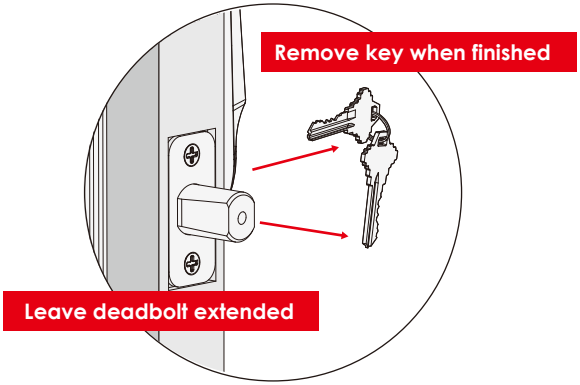

4: Use the key to ensure deadbolt locks and unlocks smoothly (no binding or rubbing). **IMPORTANT: when finished, leave the dead-bolt extended and remove the key before proceeding to the next step.**

TIP: when installing screws by hand, turn screws clockwise several turns then counterclockwise one turn to ensure smooth threading and no cross threading.

Step 4

PREPARING DOOR SENSORS FOR INSTALLATION

Do not mount (install) door sensors yet. You will install in step 7.

About door sensors
Door sensors provide real-time door condition status, such as the ability to verify if the door is securely closed. It also sends push notifications to your phone whenever your door opens and enables voice control with Amazon Alexa or Google assistant.

LOCKLY Vision™ comes with a pre-wired door sensors consisting of two parts:

Part (P) - Wired Sensor

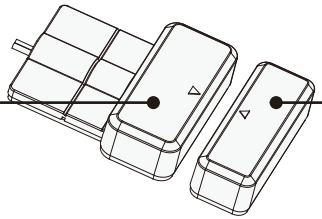

Part (Q) - Sensor Magnet

IMPORTANT: Gap must be less than 3/4" when installed.

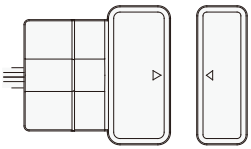

When installed on door, the distance between the wired sensor and sensor magnet must be less than 3/4" in order for the sensor to work. If door frame is higher than door, add included foam pads to level parts (P) and (Q) with each other as much as possible.

TIP: LOCKLY door sensors comes in Grey (PGA715) and Matte Black (PGA716) that can be ordered through our customer hotline: (669) 500-8835 or by email: help@LOCKLY.com.

Removal of Sensor (optional)
There may be circumstances where the sensor cannot be installed because of molding/door limitations or is not aesthetically desirable. The sensor wired to the lock is removable by carefully pulling its connector from the circuit board. **If removed, some features and functionality will not be available, such as real-time condition status.**

PREPARING DOOR SENSORS FOR INSTALLATION

When installing the door sensors, make sure the arrow on the wired sensor (P) aligns to the arrow of the sensor magnet (Q) as close as possible.

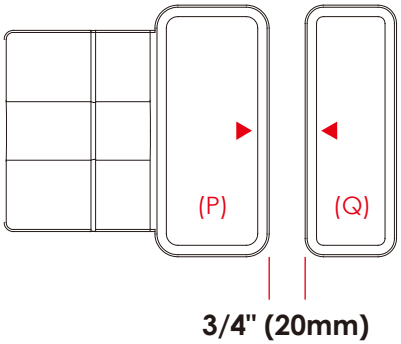

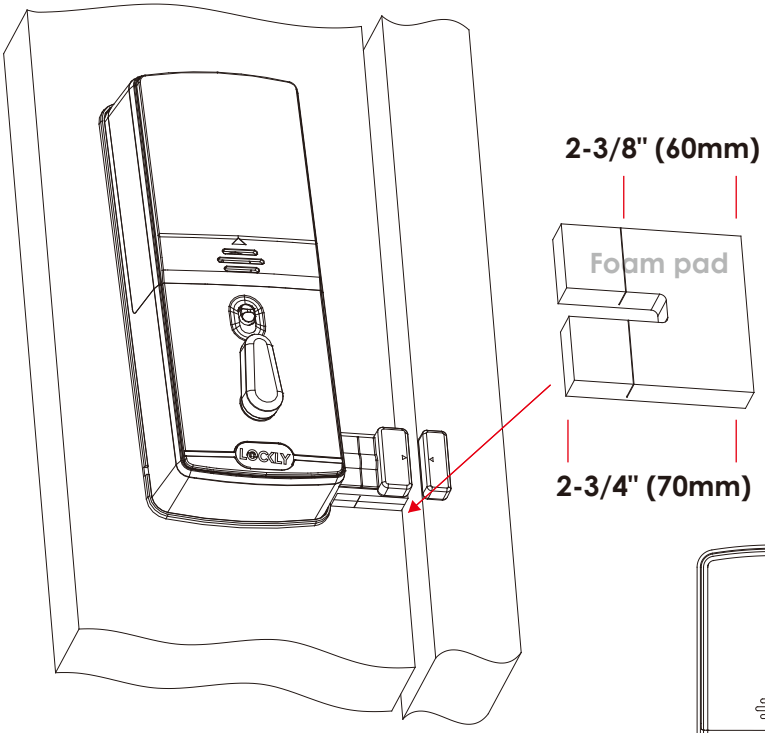

The sensors need to be as close to level as possible. If needed, use the adhesive foam pad(s) to adjust the height of the wired sensor.

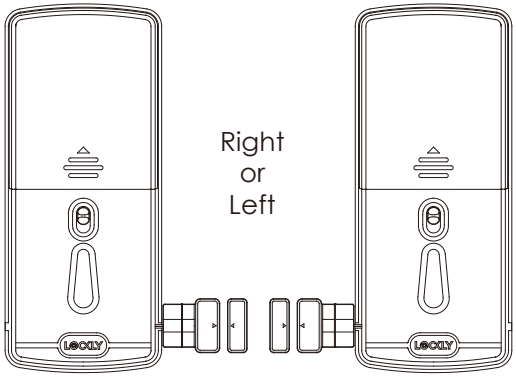

Sensors can be positioned on either left or right side (see page 10).

PREPARING DOOR SENSORS FOR INSTALLATION

The interior assembly comes with the pre-installed wired door sensor setup for a right swing doors with 2 ¾" (70mm) backset*.

Trim excess part (P) for doors with 2 ⅜" (60mm) backset as shown below.

For left swing doors, re-route the door sensor wire through the side channel. Pull the foam pad then re-insert to secure the wire. Discard the excess part (e) for doors with 2 ⅜" (60mm) backset as shown below:

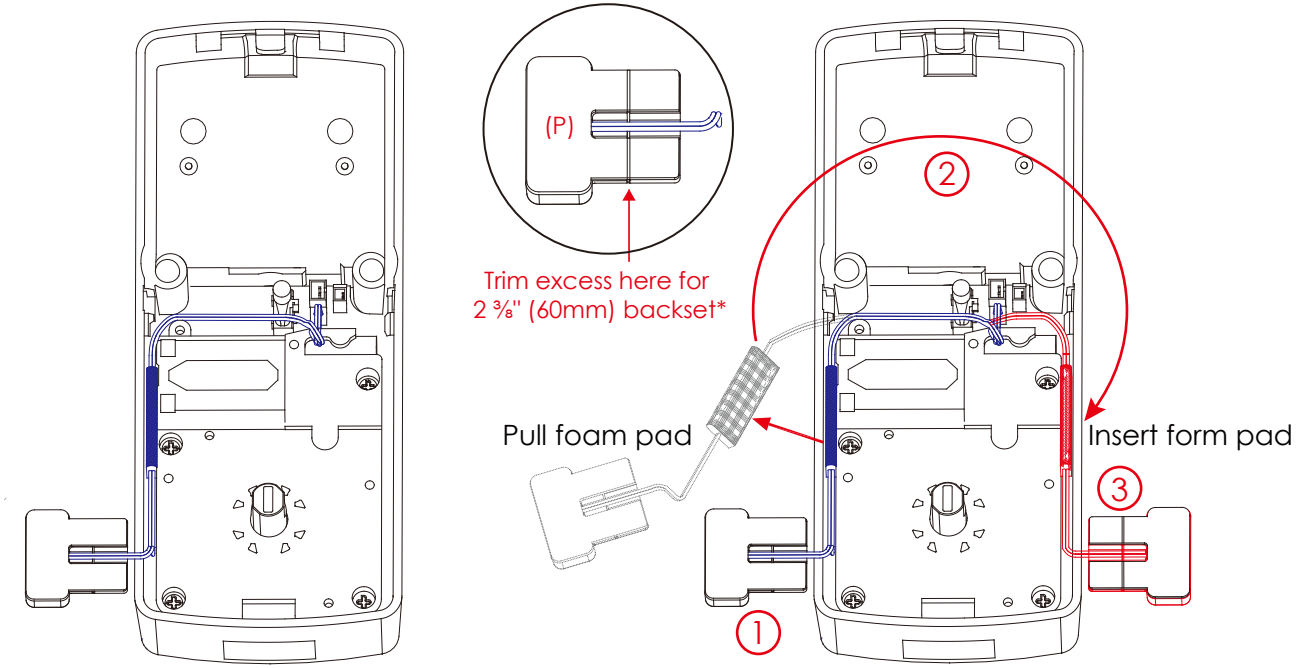

***Backset = distance of the door edge to the center of the cross-bore door hole.**

DO NOT INSTALL THE SENSORS YET

Step 5

INSTALLING THE INTERIOR ASSEMBLY (G)

Plug the larger cable coming through mounting plate (D) into the interior assembly (G) as shown. Tuck cable under eyelet hooks and route to the right on interior assembly (G).

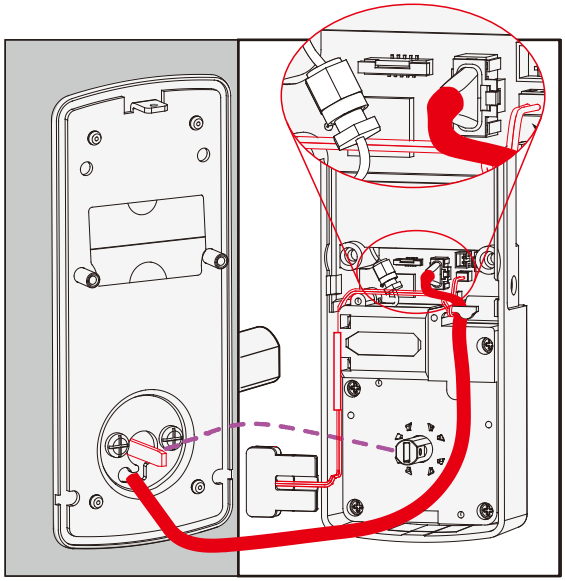

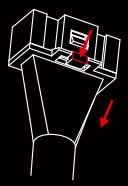

NOTE: If you need to disconnect the cable, make sure to press the snap tab to release the plug before carefully pulling it out. Do not force, as this may result in damaging the lock.

Call our Customer Care Hotline (669) 500-8835, for help if the pins are not centered or bent.

Connect A to B screw tightly by hand as shown. Plug X into Y, match red side of plug with red on socket - insert tightly.

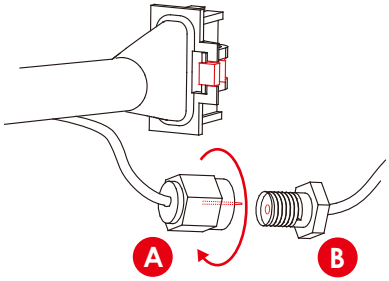

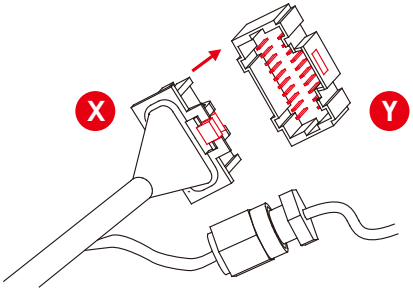

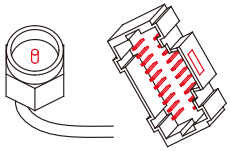

Do not touch pins inside*

INSTALLING THE INTERIOR ASSEMBLY (G)

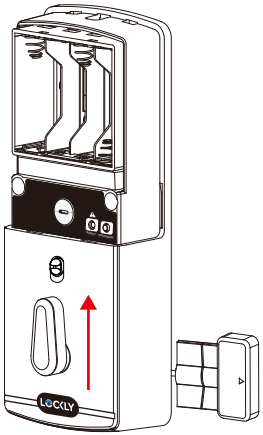

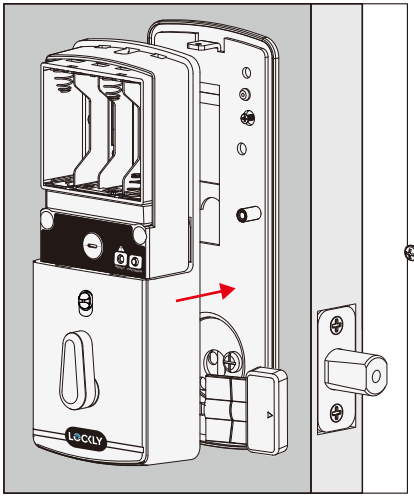

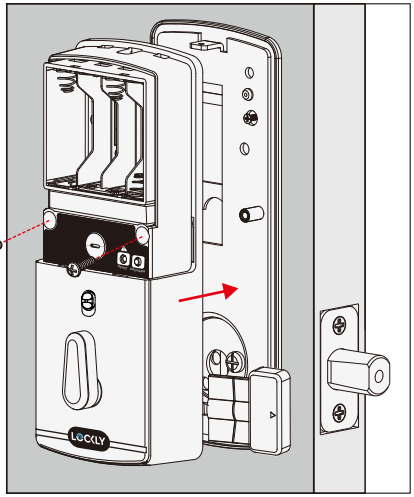

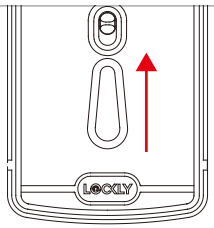

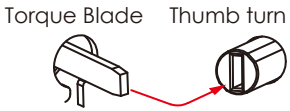

Align torque blade with thumb turn shaft, **make sure both are in the vertical position.**

H 2X

Before placing the interior assembly onto the mounting plate, ensure the thumb turn is **vertical**.

Place the interior assembly against the mounting plate and make sure the torque blade is inserted to the thumb turn shaft.

Secure the interior assembly to mount platedoor with 2 H screws.

Step 6

INSTALLING BATTERIES

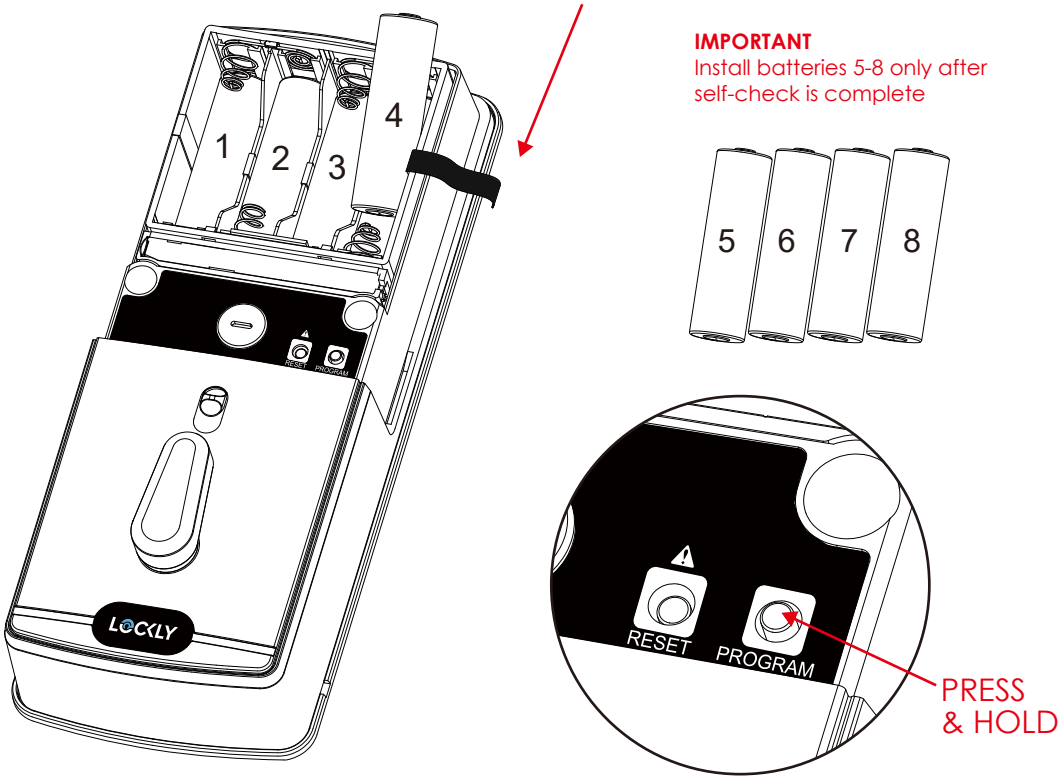

1: With door open and deadbolt **fully extended**, place ribbon inside compartment and **insert 3 batteries only (hold on inserting the 4th)** in bottom row (note correct -/+ polarity).

2: Press and **HOLD the program button,** continue to hold and install the 4th battery. The lock will automatically start self-check (**release** program button once check starts). The self-check process determines right or left swinging door and is very important to ensure correct installation.
IMPORTANT: if lock is not properly installed it will open and close repeatedly (refer to next page #3).

3: Once self-check completes ensure the lock operates smoothly by manually locking and unlocking the door using the thumb turn on the interior assembly. The deadbolt should operate smoothly without any interference or binding. If necessary, repeat step 2 and ensure that (a) the deadbolt was extended and (b) the torque blade was inserted vertically while the deadbolt was extended.

4: Swipe your hand across the touch screen keypad, the lock should close (lock). If deadbolt bounces back or unlocks automatically it means something is not installed correctly. Go back and repeat step 2, same as above.

5. Once self-check is complete, install remaining 4 batteries and battery cover (I), secure with screw on top (do not over tighten).

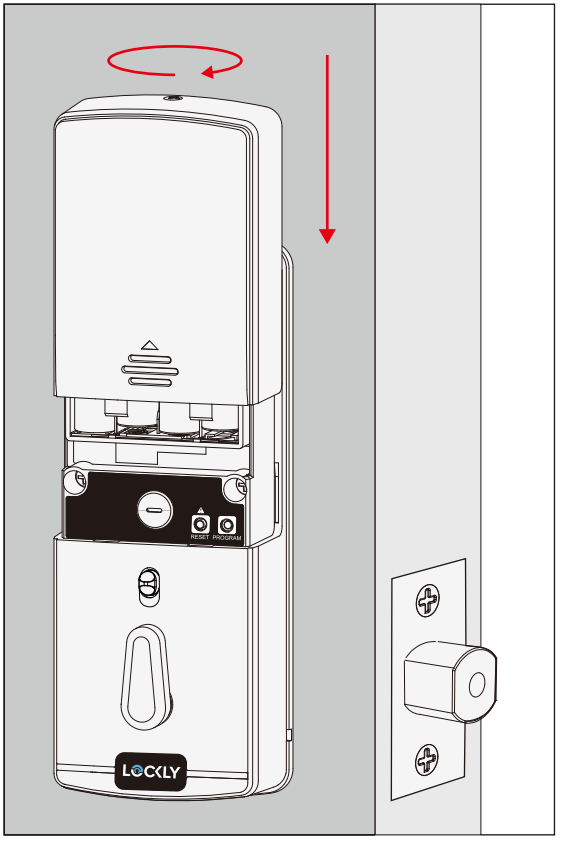

Step 7

INSTALLING THE DOORS SENSOR

Make sure you have prepared the door sensors for installation, see step 4

LOCK SENSOR (P)
Install on the interior side only. If necessary, trim tab from sensor (P) for doors with 2-3/8" (60mm) backset. Clean surface of door and doorframe, remove film from adhesive, attach and secure close to door edge as shown.

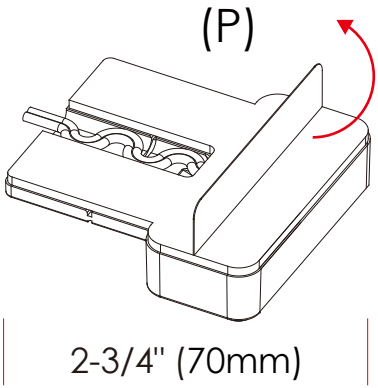

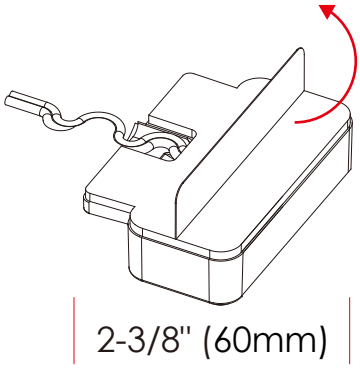

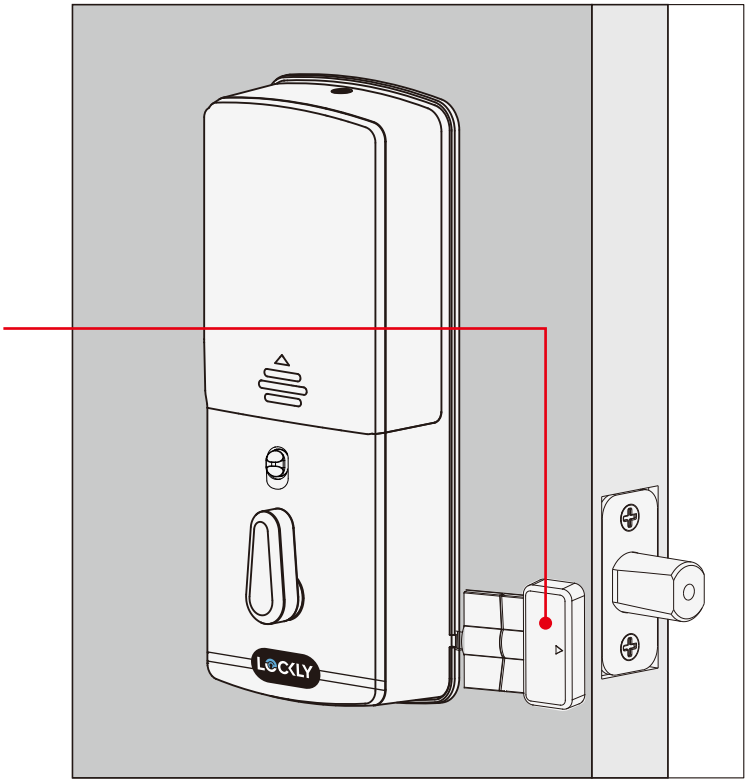

Step 7

INSTALLING THE DOORS SENSOR

DOOR FRAME SENSOR (Q)
Manually retract deadbolt and close door. Dry fit sensor (Q) to door frame and check for alignment. If needed, raise the height of the sensor to be more level with sensor (P) by adding 1 or 2 of the included adhesive foam pads. Once satisfied both sensors are as level as possible, remove film from adhesive and install with arrows aligned to each other with less than a 3/4" gap between each sensor.

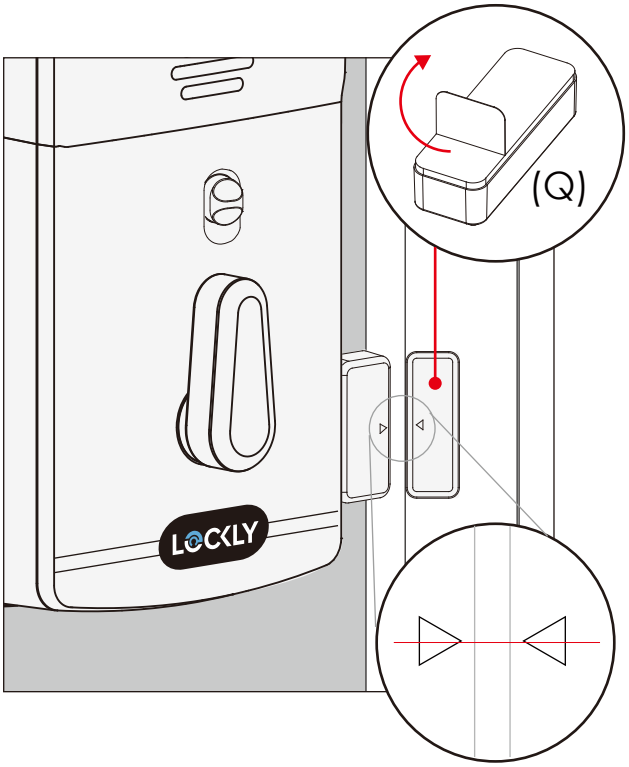

NOTE: When properly installed, the LOCKLY® logo blinks red when door opens and closes.

Step 8

INSTALLING STRIKE PLATE

Use the supplied door strike or use your existing as long as deadbolt operates smoothly without binding or catching.

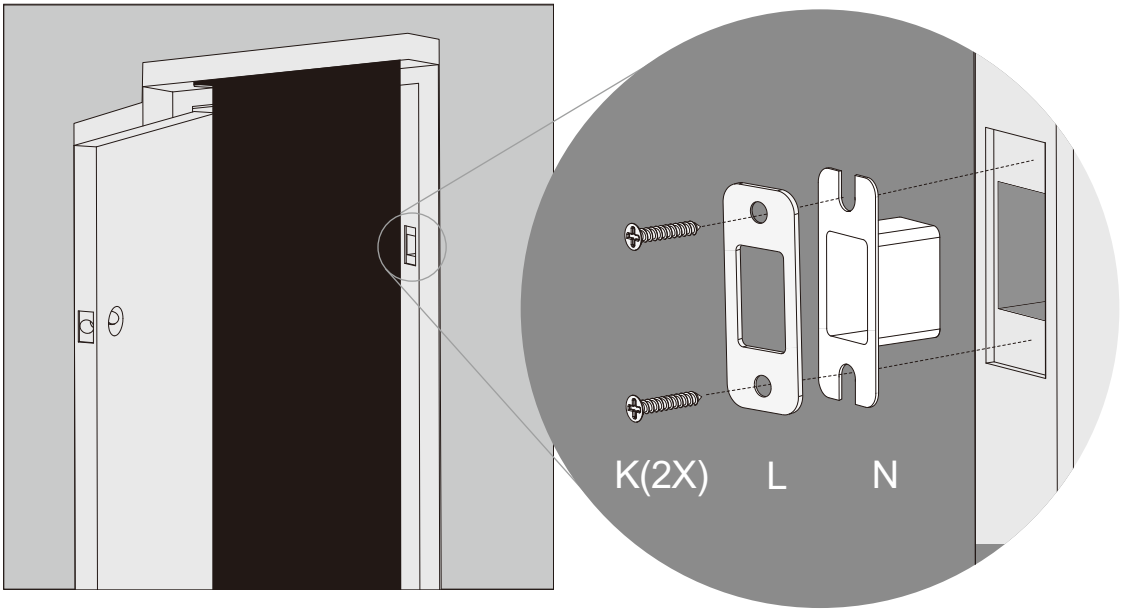

IMPORTANT: because doors and frames vary in design it may be necessary to make slight adjustments to your strike plate and/or dust box in order to ensure smooth deadbolt operation. **This is very important.** If the deadbolt is binding or catching in any way the lock will sound an alarm (rapid beeping) indicating it cannot close due to misalignment and/or excessive rubbing or binding.

Step 9

PAIRING VISION CONNECT WITH LOCK

To enable video doorbell, live monitoring and voice control with Google Assistant or Amazon Alexa, you will need to setup the included Vision Connect WI-Fi hub and pair it with the LOCKLY Vision™ deadbolt smart lock + video doorbell.

VISION CONNECT OVERVIEW

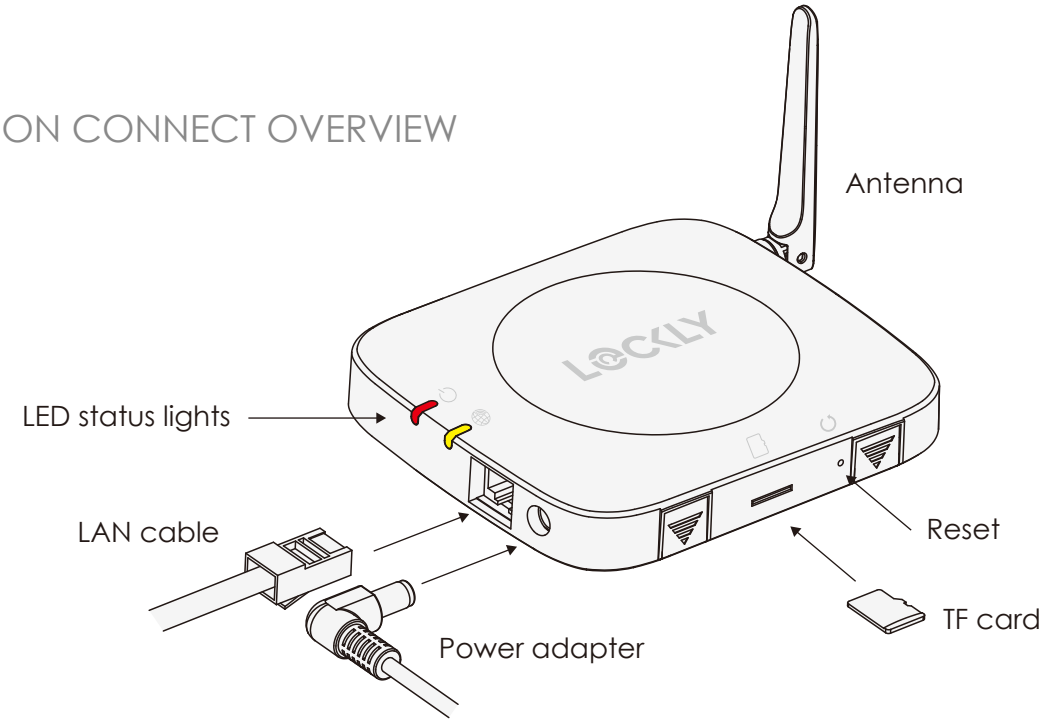

IMPORTANT: Vision Connect stores recorded video on the included TF card. Although the TF card is discrete, it is recommended to locate it in a discrete or secure area to protect your privacy and video recordings.

LOCKLY® APP & UNIQUE ACTIVATION CODE

Before connecting Vision Connect Hub download the LOCKLY app on your smartphone. It's required to finish setup and to set (pair) the connection between hub and lock.

Download on the App Store

GET IT ON Google Play

Scan, visit app store, or go to LOCKLY.com/app

Additionally, you'll need the Activation Card with unique pre-paired QR code to your lock. The card is located in the packaging that your lock came in. This QR code can also be found at the bottom of Vision Connect Hub. Please keep it in a safe place—this QR code is required to complete the setup and will be required if you lose your smartphone or access code.

IMPORTANT: Without the QR code you will not be able to reset your lock

Set up an account by registering your LOCKLY Vision™ in the LOCKLY app. Registration is also mandatory to activate your locks warranty.

1

2

3

After successful registration, select "add a new device" (you can also get to this from the menu in the top left), select Vision, and follow the step-by-step on screen instructions. You can also reference these steps on following pages.

4

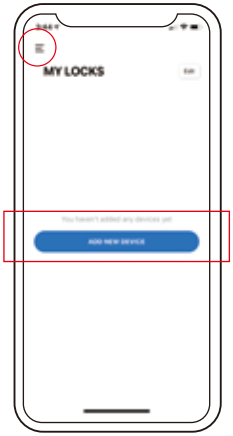

5

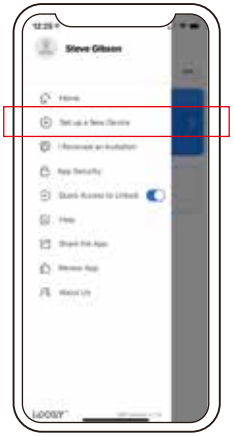

6

LOCATION GUIDELINES

The Vision Connect Hub connects directly to your Wi-Fi router using the provided LAN cable. Choose an appropriate location for the hub for optimum performance (see below). For optimum connectivity, it is recommended that the hub be no further away from the lock than 100 feet, placed 3 feet (1 meter) off the ground.

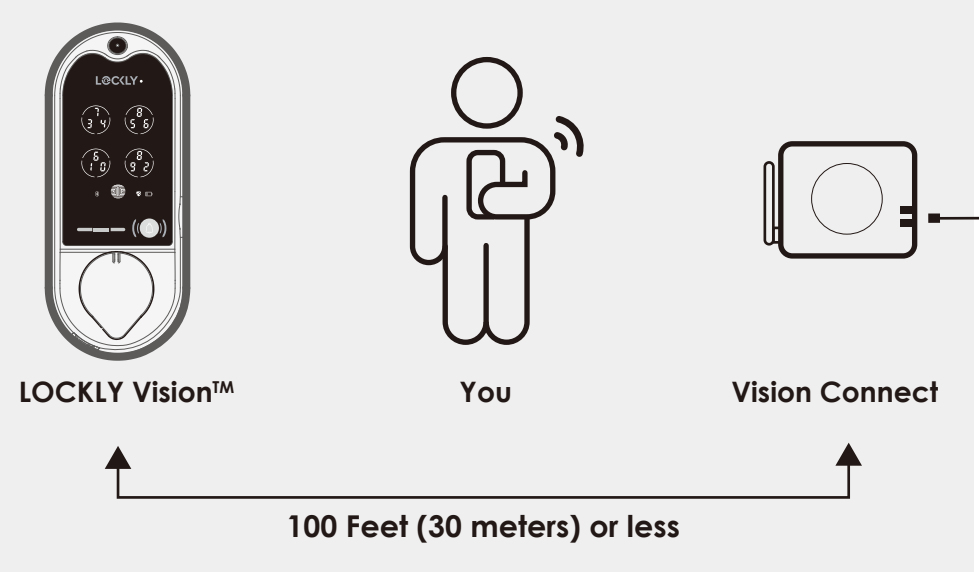

During the setup process position yourself between the lock and the Vision Connect hub—ideally no more than 100 feet (30 meters) apart. Ensure your iOS or Android device has both Bluetooth and Wi-Fi enabled,

TIP: Sometimes distances between hub and lock can vary due to circumstances. If you are having difficulty setting up optimal range of 100/ft or less, we're here to help. Call our customer care team: (669) 500 8835, or visit LOCKLY.com/help for suggestions and troubleshooting tips.

Ensure the TF card that comes with Vision Connect is properly inserted.

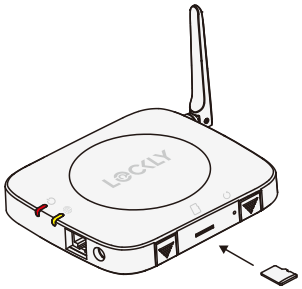

TF card (included)

Connect LAN cable to closest Wi-Fi router to the LOCKLY Vision™ lock (<100ft).

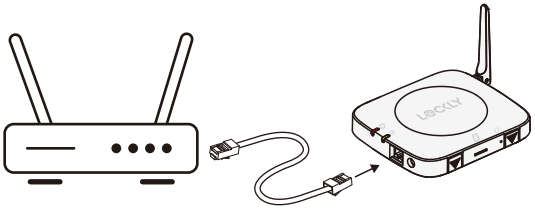

LAN cable (S) (included)

Connect power cable and plug USB power adapter into outlet.

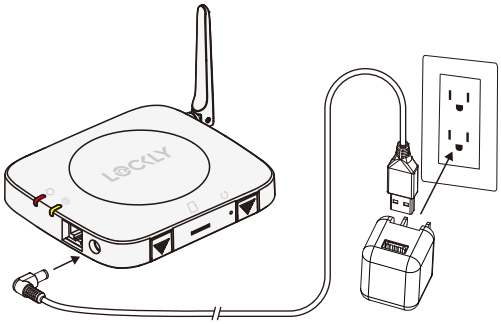

Wait 2 minutes for hub to self calibrate. Once LEDs turn RED and blink yellow.

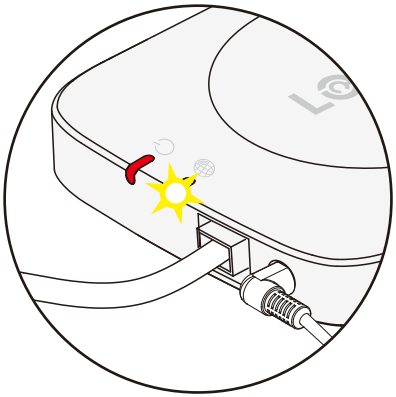

Vision Connect is now ready to connect to your iOS or Android device.

See troubleshooting on next page if LEDs do not meet the described conditions.

PAIR VISION LOCK TO APP

Launch the **LOCKLY® App** and select "add a new device", then select Vision. You will be prompted to scan the QR code from the Activation Card or Vision Connect Hub (located at the bottom).

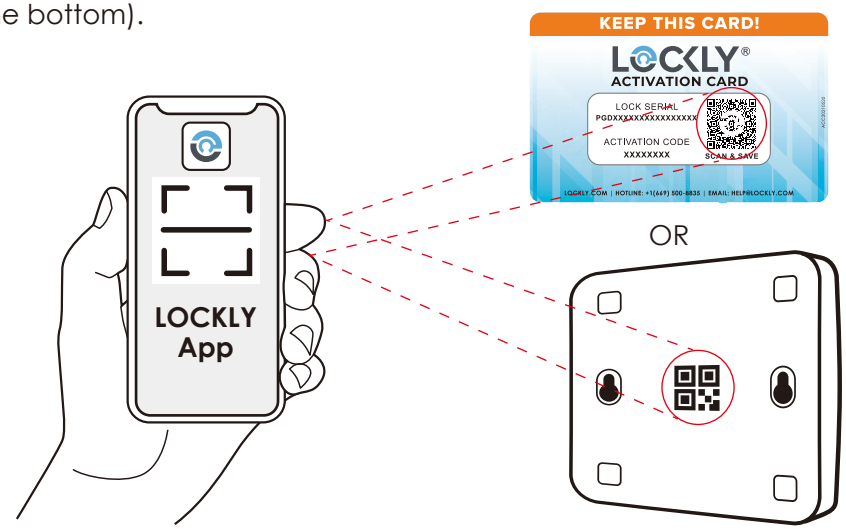

IMPORTANT: make sure your LOCKLY Vision has the latest firmware. Allow updates and follow instructions if prompted. For more info, visit: http://www.support.LOCKLY.com/-faq/firmware-update/

NOTE: Power interruption during firmware update may damage the Vision Connect hub. Do not interrupt or turn the power off while firmware update is in progress.

TIPS:

- Remember to register for warranty.
- Allow your mobile phone to receive push notifications.
- Send in-app feedback if you encounter any issues while using the App.
- If you are having difficulty scanning the QR code, we're here to help. Call our customer care team: (669) 500 8835, or visit LOCKLY.com/help for suggestions and troubleshooting tips.

VISION CONNECT STATUS & TROUBLESHOOTING

	LED INDICATORS	HUB	STATUS
During Setup	Solid red ON	After connecting LAN cable and power adapter, wait for 2mins for Vision Connect to self calibrate.	Power ON/ Successfully paired
During Setup	Yellow rlow blinking	READY TO CONNECT	Network connected
	If you experience any of the following, power down and disconnect hub, repeat connection process		
During Setup	Red slow blinking		Pairing / Network NOT yet connected
During Setup	Red fast blinking	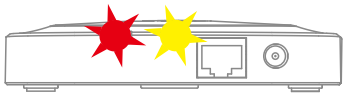	Pairing unsuccessful
During Setup	Yellow OFF	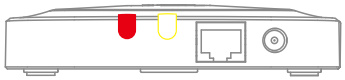	Router or LAN cable issue NO network connection
During Setup	Blinking red goes to blue, then turns OFF		Resetting
During Firmware Update	Blue slow blinking		Update in progress*
During Firmware Update	Blue ON		Update Successful
During Firmware Update	Blinking from red to blue	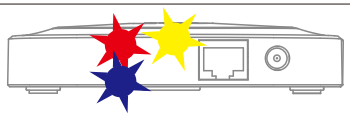	Update has failed

*Power interruption during firmware update may damage the Vision Connect hub.
Do not interrupt or turn the power off while firmware update is in progress.

Control with Amazon Alexa or Google Assistant.
Control and check your door status by using your voice through Amazon Alexa or Google Assistant.

Alexa, check if my front door is unlocked?

Hey Google, unlock my office door.

To setup your lock to work with either voice assistant, download the Amazon Alexa or Google Home App and add a new skill for Amazon Alexa or action for Google Assistant.

works with Google Assistant

WORKS WITH alexa

TIP: In Google Home and/or Amazon Alexa apps, add the "LOCKLY" skill for Alexa or action for Google Assistant, then follow on screen instructions. See full list of commands, help videos, or troubleshooting your LOCKLY Vision™ at https://LOCKLY.com/help

Google, Android and Google Play are trademarks of Google LLC.

Go to LOCKLY.com/pages/installation to watch a video version of this installation guide.

OR

Download the BILT app in the Apple or Google Play store for step-by-step interactive 3-D walk-through installation instructions.

FCC Warning:
This device complies with Part 15 of the FCC Rules. Operation is subject to the following two conditions: (1) This device may not cause harmful interference, and (2) this device must accept any interference received, including interference that may cause undesired operation.

NOTE 1: This equipment has been tested and found to comply with the limits for a Class B digital device, pursuant to part 15 of the FCC Rules. These limits are designed to provide reasonable protection against harmful interference in a residential installation. This equipment generates, uses and can radiate radio frequency energy and, if not installed and used in accordance with the instructions, may cause harmful interference to radio communications. However, there is no guarantee that interference will not occur in a particular installation. If this equipment does cause harmful interference to radio or television reception, which can be determined by turning the equipment off and on, the user is encouraged to try to correct the interference by one or more of the following measures:
- Reorient or relocate the receiving antenna.
- Increase the separation between the equipment and receiver.
- Connect the equipment into an outlet on a circuit different from that to which the receiver is connected.
- Consult the dealer or an experienced radio/TV technician for help.

NOTE 2: Any changes or modifications to this unit not expressly approved by the party responsible for compliance could void the user's authority to operate the equipment.

FCC Radiation Exposure Statement
Vision Connect complies with FCC radiation exposure limits set forth for an uncontrolled environment. It should be installed and operated with minimum distance 20cm between the radiator & your body.

IC WARNING
This device contains license-exempt transmitter(s) that comply with Innovation, Science and Economic Development Canada's licence-exempt RSS(s). Operation is subject to the following two conditions:
(1) This device may not cause interference.
(2) This device must accept any interference, including interference that may cause undesired operation of the device.

L'émetteur/récepteur exempt de licence contenu dans le présent appareil est conforme aux CNR d'Innovation, Sciences et Développement économique Canada applicables aux appareils radio exempts de licence. L'exploitation est autorisée aux deux conditions suivantes:

1. L'appareil ne doit pas produire de brouillage;
2. L'appareil doit accepter tout brouillage radioélectrique subi, même si le brouillage est susceptible d'en compromettre le fonctionnement.

IC Radiation Exposure Statement
This equipment meets the exemption from the routine evaluation limits in section 2.5 of RSS-102. It should be installed and operated with a minimum distance of 20cm between the radiator and any part of your body.

Cet équipement est conforme à l'exemption des limites d'évaluation habituelle de la section 2.5 de lanorme RSS-102. Il doit être installé et utilisé à une distance minimale de 20 cm entre le radiateur et toute partie de votre corps.

WARNING: This product can expose you to chemicals including Lead, which is known to the State of California to cause cancer. For more information go to www.P65Wamings.ca.gov.

INSTALLATION OVERVIEW AND PARTS LIST

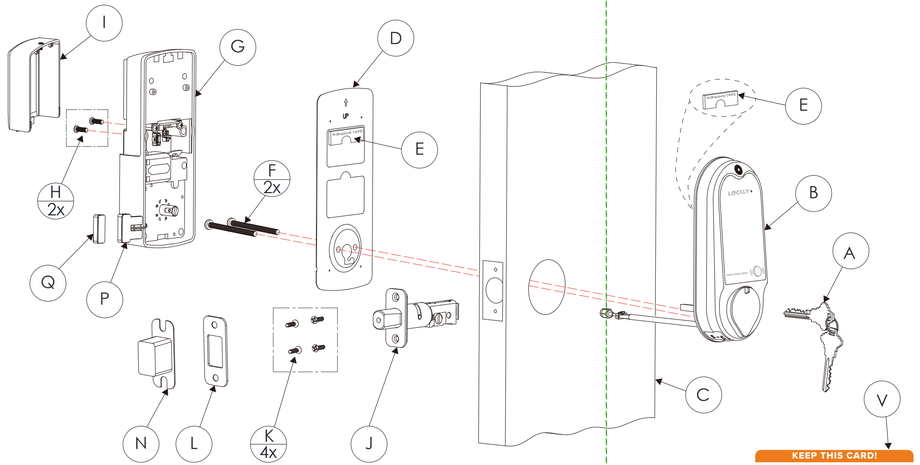

LOCKLY Vision™ can be fitted for both right swing doors and left swing doors.

Parts List
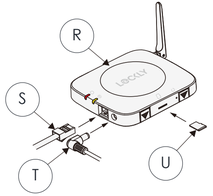
Labeled As	Description
A	Keys
B	Exterior Assembly
C	Exterior
D	Mounting Plate
E	Adhesive
F	PM5×60mm Screw
G	Interior Assembly
H	PM4*12MM Screw
I	Battery Cover
J	Deadbolt
K	KA4*20MM Screw
L	Strike Plate
N	Dust Box
P	Wired Sensor
Q	Sensor Magnet
R	Vision Connect
S	LAN Cable
T	Power Plug
U	TF Card
V	Activation Card