Product Specification

Revision	V1.0		
Date	2017-4-15		
Model Name	BL-M8821CU1		
ProductName	IEEE 802.11b/g/n/ac(1T1R) USB WLANAnd BT Module		
Bilian Approve Field			
Engineer	**QC**	**Sales**	
		夏建军 xia@b-link.net.cn 13798358430	
Customer Approve Field			
Engineer	**QC**	**Manufactory**	**Purchasing**

Shenzhen Bilian Electronic Co.，Ltd
Address: No 268,Fuqian Rd.,JuTang Community ,Guanlan Town,Baoan District, Shenzhen, 518110,PRC
Homepage: www.b-link.net.cn

Table of Contents

Revision History 1
1. Introduction 1
1.1 General Description 1
1.2 Features 1
1.3 Applications 2
2. Functional Block Diagram 2
3. Product Technical Specifications 2
3.1 General Specifications 2
3.2 DC Power Consumption 3
3.3 RF Specifications 4
4. Pin Assignments 7
5. Application Information 8
5.1 Supported Platform 8
5.2 Typical Application Circuit 8
6. Mechanical Specifications 10
7. Others 11
7.1 Package Information 11
7.2 Storage Temperature and Humidity 11
7.3 Recommended Reflow Profile 11

Revision History

Date	Document Revision	Product Revision	Description
2017/4/6	0.1	V1.0	Preliminary release
2017/4/15	V1.0	V1.0	Ver 1.0 release

1. Introduction

1.1 General Description

BL-M8821CU1 product is a highly integrated single-chip 802.11a/b/g/n/ac 1T1R USB2.0WLAN controller It combines a WLAN MAC, a 1T1R capable WLAN baseband, BT Protocol (LM , LL and LE),BT Baseband, modem, and WLAN/BT RF in a single chip. The module provides a complete solution for ahigh-performance wireless LAN and Bluetooth device. The BT controller supports BT 4.2 system .

Figure 1 Top View

Figure 2 Bottom View

Note:The above picturesare for reference only

1.2 Features

- Operating Frequencies : 2.4~2.4835GHz and 5.15~5.25GHz
- Host Interface is USB 2.0 for WLAN and BT controller
- IEEE Standards : IEEE 802.11a/b/g/n/ac
- Wireless data rate can reach up to 433.3Mbps
- Bluetooth Low Energy Support
- Connect to external antenna through the half hole
- Power Supply:3.3V±0.2V

1.3 Applications

- MID
- IP Camera
- STB
- Smart TV
- E-book
- Other devices which need to be supported by wireless network

2. Functional Block Diagram

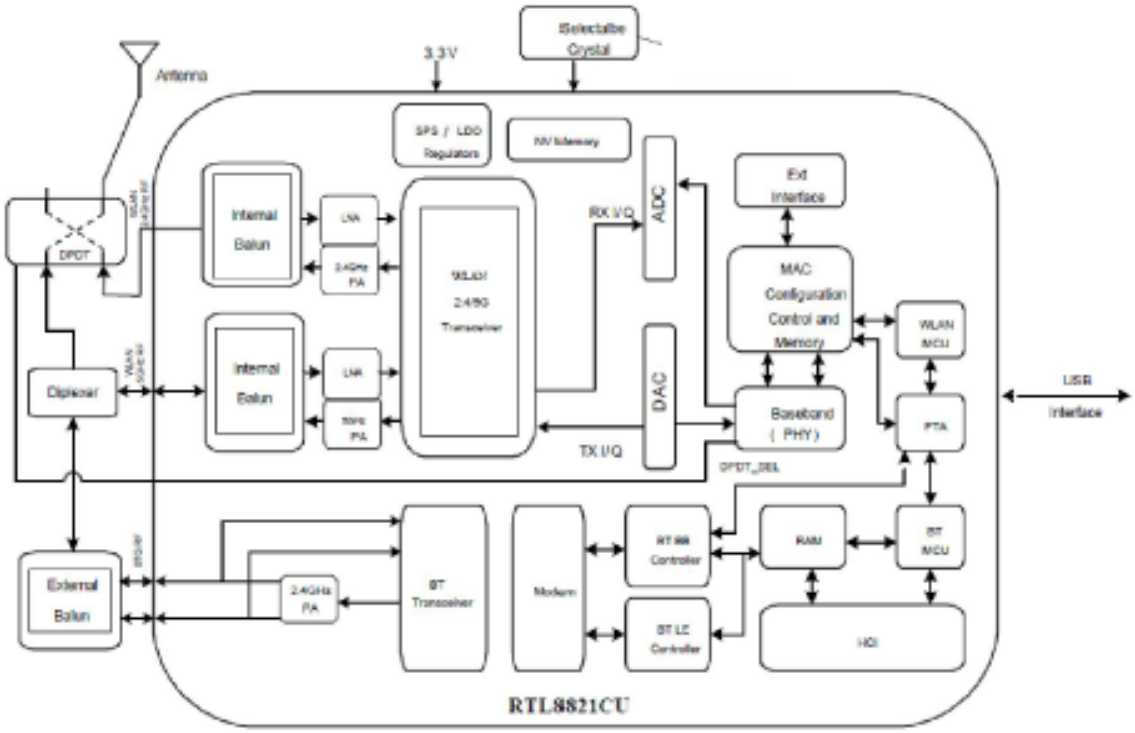

Figure 3 BL-M8821CU1 block diagram

3. Product Technical Specifications

3.1 General Specifications

Item	Description
Product Name	BL-M8821CU1
Main Chip	RTL8821CU-CG
Host Interface	USB 2.0
IEEE Standards	IEEE 802.11a/b/g/n/ac
Operating Frequencies	2.4GHz~2.4835GHz /5.15GHz~5.25GHz

Modulation	WiFi: 802.11b: CCK, DQPSK, DBPSK 802.11a/g: 64-QAM,16-QAM, QPSK, BPSK 802.11n: 64-QAM,16-QAM, QPSK, BPSK 802.11ac: 256-QAM,64-QAM,16-QAM, QPSK, BPSK BT: 8DPSK, π/4DQPSK,GFSK
Working Mode	Infrastructure, Ad-Hoc
Wireless Data Rate	WiFi: 802.11b: 1, 2 ,5.5,11Mbps 802.11a/g: 6,9,12,18,24,36,48,54Mbps 802.11n: HT20 reach up to144.4Mbps, HT40 reach up to300Mbps 802.11ac: VHT20 reach up to 173.3Mbps, VHT40 reach up to 239Mbps, VHT80 reach up to 433.3Mbps BT: 1Mbps for Basic Rate 2,3 Mbps for Enhanced Date Rate
Rx Sensitivity	-96dBm (Min)
TX Power	16.5dBm (Max)
Antenna Type	Connect to external antenna through the IPEX connector
Dimension(L*W*H)	13.0*12.2*1.5mm (L*W*H) ，Tolerance: ±0.15mm
Power Supply	3.3V±0.2V
Power Consumption	Standby 192mA@3.3V (Max) TX mode 908 mA@3.3V (Max)
Clock Source	40MHz
Working Temperature	-10° C to +50° C
Storage Temperature	-40° C to +70° C

ESD CAUTION: Although this module is designed to be as robust as possible, Electrostatic Discharge (ESD) can damage this module. It must be protected from ESD at all times and handled under the protection of ESD.

3.2 DC Power Consumption

Vcc=5V，Ta= 25 °C，unit: mA				
Supply current	Typ.		Max	
Standby (RF disabled)	82		104	
802.11b	1Mbps		11Mbps	
Supply current	Typ.	Max.	Typ.	Max.

TX mode	375	404	350	420
Rxmode	80	104	80	104
802.11g	6Mbps		54Mbps	
Supply current	Typ.	Max.	Typ.	Max.
TX mode	325	388	240	376
Rxmode	85	112	86	116
802.11n HT20	MCS0		MCS7	
Supply current	Typ.	Max.	Typ.	Max.
TX mode	320	380	239	372
Rxmode	87	112	88	116
802.11n HT40	MCS0		MCS7	
Supply current	Typ.	Max.	Typ.	Max.
TX mode	286	352	215	360
Rxmode	89	116	90	120
802.11a	6Mbps		54Mbps	
Supply current	Typ.	Max.	Typ.	Max.
TX mode	340	420	270	380
Rxmode	90	120	91	124
802.11n HT40(5G)	MCS0		MCS7	
Supply current	Typ.	Max.	Typ.	Max.
TX mode	320	392	240	384
Rxmode	92	124	93	128
802.11ac	MCS0		MCS9	
Supply current	Typ.	Max.	Typ.	Max.
TX mode	300	380	240	388
Rxmode	104	132	106	144

3.3 RF Specifications

TX Power	2.4G: 802.11b:15±1.5dBm 802.11g/11n-HT20:12±1.5dBm 802.11n -HT40:10±1.5dBm 5G: 802.11a/11n-HT20:15±1.5dBm 802.11n-HT40:12±1.5dBm 802.11ac:10±1.5dBm BT: 1±1.5dBm

TX Constellation Error(EVM)	2.4G: 802.11b: <-22dB@11Mbps 802.11g: <-28dB@54Mbps 802.11n-HT20: <-28dB@72.2Mbps 802.11n-HT40:< -28dB@150Mbps 5G: 802.11a: <-28dB@54Mbps 802.11n-HT20: <-28dB@72.2Mbps 802.11n-HT40: <-28dB@150Mbps 802.11ac:< -33dB@433Mbps
Receiver Minimum Input Sensitivity@PER	1Mbps: -96dBm@PER<8%; 11Mbps:-90dBm@PER<8%; 54Mbps:-72dBm@PER<10%; 150Mbps:-69dBm@PER<10%; 433Mbps:-59dBm@PER<10%;

RFTest Report										
PathA										
2.4G										
Mode	Rate(Mbps)	Power(dBm)			EVM(dB)			Sensitivity(dBm)		
		CH1	CH7	CH13	CH1	CH7	CH13	CH1	CH7	CH13
11b	1	13.93	14.37	14.22	-33.81	-37.73	-37.84	-96	-96	-96
	11	14.19	13.79	13.92	-26.74	-27.27	-24.98	-90	-90	-90
11g	9	11.83	11.05	11.69	-26.19	-24.04	-24.94	-91	-91	-91
	54	11.72	11.44	11.48	-34.08	-32.80	-31.81	-75	-75	-75
Mode	Rate(Mbps)	Power(dBm)			EVM(dB)			Sensitivity(dBm)		
		CH3	CH7	CH11	CH3	CH7	CH11	CH3	CH7	CH11
11n HT40	MCS0	10.78	10.28	10.87	-30.13	-27.60	-27.78	-89	-89	-89
	MCS7	10.97	10.99	10.99	-34.46	-33.68	-34.61	-70	-70	-70
BT	Rate(Mbps)	Power(dBm)						Sensitivity(dBm) (LE mode)		
		0	50		75			37	38	39
DH1	1	1.94	1.35		1.31			-77	-77	-77
3DH5	3	1.28	1.08		1.07			-73	-73	-73

RFTest Report				
PathA				
5G				
Mod	Rate(	Power(dBm)	EVM(dB)	Sensitivity(dBm)

e	Mbps)	CH 36	CH 100	CH 140	CH 161	CH 36	CH100	CH140	CH161	CH 36	CH 100	CH 140	CH 161
11a	9	13.56	14.02	14.22	14.08	-24.32	-26.25	-24.10	-24.93	-90	-90	-90	-90
	54	14.29	14.86	14.60	14.48	-29.62	-31.00	-30.43	-30.92	-74	-74	-74	-74
Mod e	Rate(Mbps)	Power(dBm)				EVM(dB)				Sensitivity(dBm)			
		CH 38	CH 102	CH 142	CH 159	CH 38	CH102	CH142	CH159	CH 38	CH 102	CH 142	CH 159
11n 40	MCS0	12.75	12.63	12.76	12.99	-25.09	-27.21	-26.30	-25.59	-88	-87	-87	-87
	MCS7	12.44	12.48	12.33	12.74	-30.65	-31.13	-30.45	-31.74	-69	-69	-69	-69
Mod e	Rate(Mbps)	Power(dBm)				EVM(dB)				Sensitivity(dBm)			
		CH 42	CH 106	CH 138	CH 155	CH 42	CH106	CH138	CH155	CH 42	CH 106	CH 138	CH 155
11ac	MCS0	10.99	10.47	10.21	10.50	-27.71	-27.64	-28.39	-28.33	-84	-84	-84	-84
	MCS9	10.73	10.34	10.29	10.40	-35.50	-32.91	-36.04	-35.52	-60	-59	-59	-59

4

4. Pin Assignments

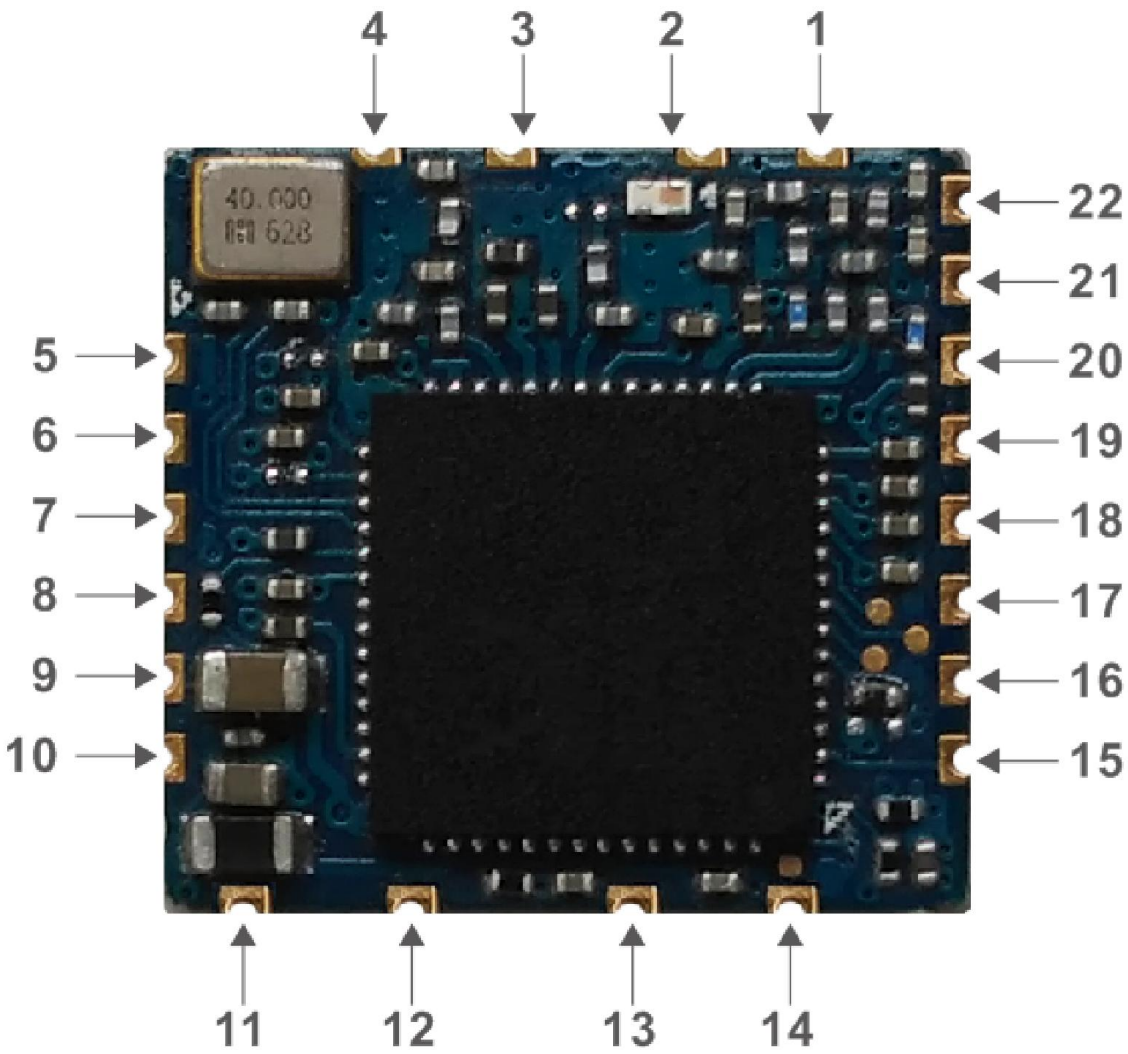

Figure 4 Pin Assignments (Top view)

The following signal type codes are used in the tables:

I:Input O:Output

O/D: Open Drain P:Power Pin

Pin No:	Pin Name	Type	Description
1	GND	P	Ground
2	RF_0	I/O	5G WIFI and BT ANT

3	RF_1	I/O	2G WIFI ANT
4	GND	P	Ground
5、6、7、8	NC	/	Floating(Don't connected to ground
9	BT_WAKE_HOST	O	Bluetooth device to wake up HOST
10	HOST_WAKE_BT	I	HOST to wake up Bluetooth device
11	VIN	P	VDD3.3VPower Supply
12	USB_DM	I/O	USB Transmitter/Receiver Differential Pair
13	USB_DP	I/O	USB Transmitter/Receiver Differential Pair
14	GND	P	ground
15	3DD_SYNC	I/O	PCM_OUT/GPIO1
16	WL_DIS	I	WIFI DISABLE （Low potential）
17	BT_DIS	I	BT DISABLE （Low potential）
18	CHIP_EN	I	High asserting for use/ Low asserting reset
19	HST_WAKE_WL	I	HOST to wake up WIFI
20	WL_WAKE_HST	O	WIFI to wake up HOST
21	WPS	/	WPS Switch
22	LED	/	External LED Control

5. Application Information

5.1 Supported Platform

Operating System	CPU Framework	Driver
LINUX(Kernel 2. 6. 24~3. 19. 3)	ARM, MIPSII, X86 Platform	Enable

5.2 Typical Application Circuit

LED Circuit

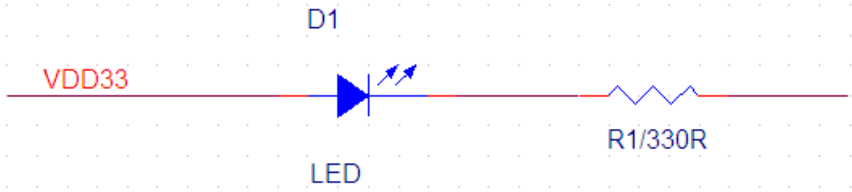

WPS Circuit

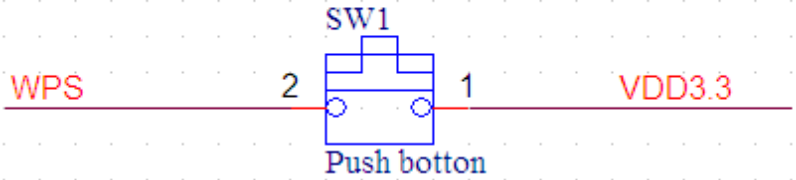

WPS CONFIGURE

RF reference circuit

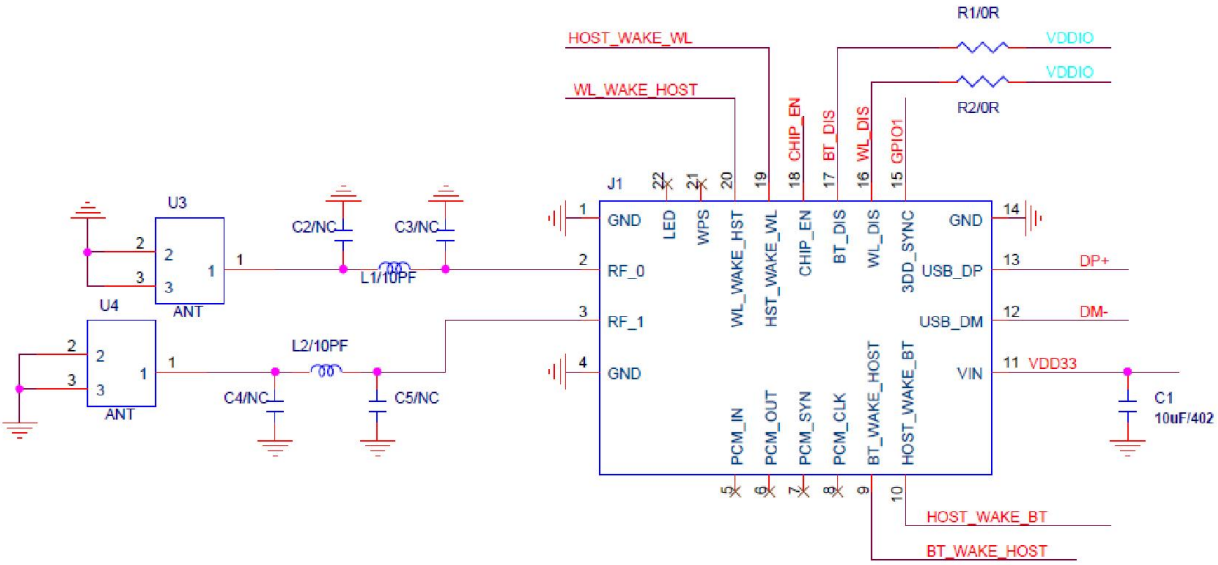

Figure 5 Typical application circuit

NOTE:

1、RF trace need to keep 50 ohm impedance.

2、USB differential pair need to keep 90ohm impedance.

3、C1 10uF closed to Module pin 11

4、Reserved 0R between Module pin 16 pin 17 and Host

6. Mechanical Specifications

Module dimension: Typical (L*W * H): 13.0mm*12.2mm*1.5mm Tolerance : +/-0.15mm

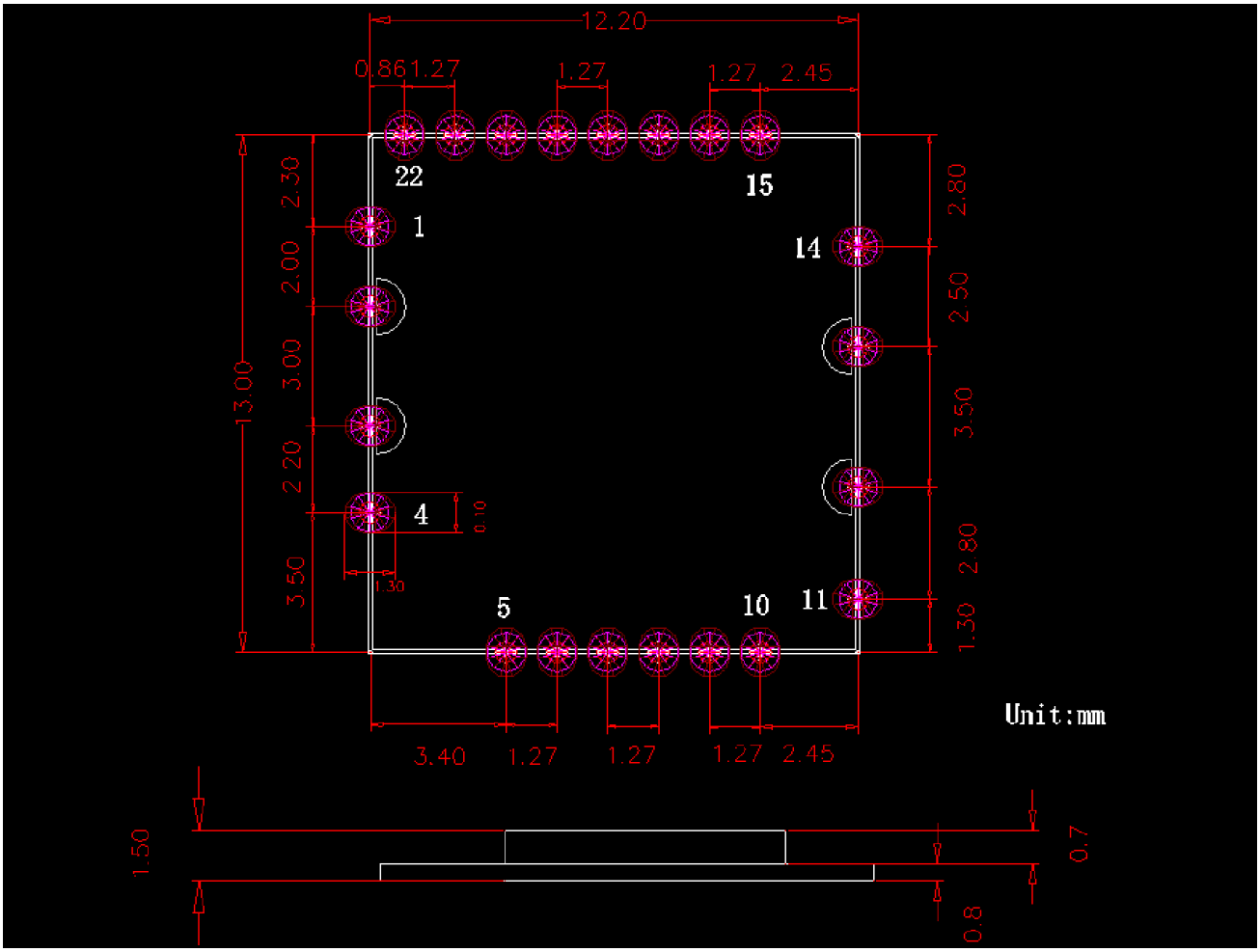

Figure 6 Module dimension

7. Others

7.1 Package Information

Figure 7 Package Information

7.2 Storage Temperature and Humidity

1. Storage Condition: Moisture barrier bag must be stored under 30℃, humidity under 85% RH. The calculated shelf life for the dry packed product shall be a 12 months from the bag seal date. Humidity indicator cards must be blue, <30%.

2.Products require baking before mounting if humidity indicator cards reads > 30% temp < 30℃, humidity < 70% RH, over 96 hours.

Baking condition: 125℃, 12 hours.

Baking times: 1 time.

7.3 Recommended Reflow Profile

Reflow soldering shall be done according to the solder reflow profile,Typical Solder Reflow Profile is illustrated in Figures 8. The peak temperature is 245℃.

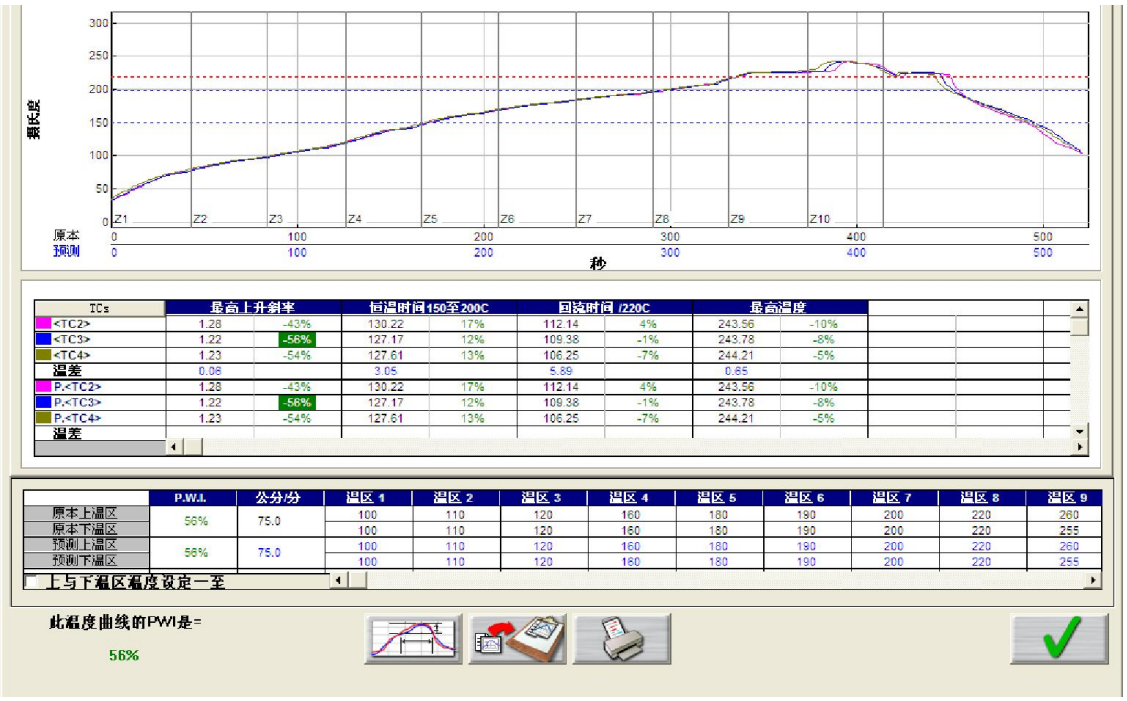

Figure 8 Typical Solder Reflow Profile

FCC Statement

This device complies with part 15 of the FCC rules. Operation is subject to the following two conditions: (1) this de vice may not cause harmful interference, and (2) this device must accept any interference received, including i nterference that may cause undesired operation.

Changes or modifications not expressly approved by the party responsible for compliance could void the user's au thority to operate the equipment.

NOTE: This equipment has been tested and found to comply with the limits for a Class B digital device, pursuant t o part 15 of the FCC Rules. These limits are designed to provide reasonable protection against harmful interferenc e in a residential installation. This equipment generates uses and can radiate radio frequency energy and, if not in stalled and used in accordance with the instructions, may cause harmful interference to radio communications. H owever, there is no guarantee that interference will not occur in a particular installation. If this equipment does ca use harmful interference to radio or television reception, which can be determined by turning the equipment off and on, the user is encouraged to try to correct the interference by one or more of the following measures:

- Reorient or relocate the receiving antenna.
- Increase the separation between the equipment and receiver.
- Connect the equipment into an outlet on a circuit different from that to which the receiver is connected.
- Consult the dealer or an experienced radio/TV technician for help important announcement

Radiation Exposure Statement

This equipment complies with FCC radiation exposure limits set forth for an uncontrolled environment. This equipment should be installed and operated with minimum distance 20cm between the radiator and your body.

This transmitter must not be co-located or operating in conjunction with any other antenna or transmitter.

Important Note:

In the event that these conditions cannot be met (for example certain laptop configurations or co-location with another transmitter), then the FCC authorization is no longer considered valid and the FCC ID cannot be used on the final product. In these circumstances, the OEM integrator will be responsible for re-evaluating the end product (including the transmitter) and obtaining a separate FCC authorization.

End Product Labeling

The final end product must be labeled in a visible area with the following" Contains FCC ID:2ASJA-B8821CU1".

Manual Information to the End User

The OEM integrator has to be aware not to provide information to the end user regarding how to install or remove this RF module in the user's manual of the end product which integrates this module.

The end user manual shall include all required regulatory information/warning as show in this manual.