English

Instruction and operation manual

S 421

Thermal mass flow sensor

Dear Customer,

Thank you for choosing our product.

Please read this manual in full and carefully observe the operating instructions before starting up the device. The manufacturer cannot be held liable for any damage which occurs as a result of non-observance or non-compliance with this manual.

Should the device be tampered with in any manner other than a procedure which is described and specified in the manual, the warranty is cancelled and the manufacturer is exempt from liability.

The device is designed exclusively for the described application.

SUTO offers no guarantee for the suitability for any other purpose. SUTO is also not liable for consequential damage resulting from the delivery, capability or use of this device.

Table of contents

1. Safety instructions....4
2. Application....7
3. Features....7
4. Technical Data....8
4.1 General....8
4.2 Electrical Data....9
4.3 Output-Signals....9
4.4 Accuracy 9
5. Dimensional drawing....10
6. Installation considerations....13
7. Inlet and Outlet sections....14
8. Sensor Installation 17
8.1 Removal of the flow sensor 18
8.2 Electrical connection 19
9. Sensor signal outputs....21
9.1 Analog output....21
9.2 Pulse output....21
9.2.1 Pulse Connection Diagram....23
9.3 Modbus output....24
10. Sensor display (option)....25
10.1 Starting process....25
10.2 Configuration using the display....26
11. Service App—S4C-FS....27
12. Calibration....28
13. Maintenance....28
14. Disposal or waste....28
15. Warranty....29
Appendix A Analogue output....30
Appendix B Modbus communication example....31
Appendix C LRC and CRC calculation....33

1. Safety instructions

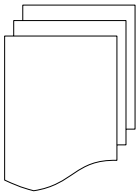

Please check if this instruction manual accords to the product type.

Please observe all notes and instructions indicated in this manual. It contains essential information which must be observed before and during installation, operation and maintenance. Therefore this instruction manual must be read carefully by the technician as well as by the responsible user / qualified personnel.

This instruction manual must be available at the operation site of the flow sensor at any time. In case of any obscurities or questions, regarding this manual or the product, please contact the manufacturer.

WARNING!

Compressed air!

Any contact with quickly escaping air or bursting parts of the compressed air system can lead to serious injuries or even death!

- Do not exceed the maximum permitted pressure range (see sensors label).
- Only use pressure tight installation material.
- Avoid that persons get hit by escaping air or bursting parts of the instrument.
- The system must be pressureless during maintenance work.

WARNING!

Voltage used for supply!

Any contact with energized parts of the product, may lead to an electrical shock which can lead to serious injuries or even death!

- Consider all regulations for electrical installations.
- The system must be disconnected from any power supply during maintenance.
- Any electrical work on system is only allowed by authorized qualified personal.

WARNING!

Permitted operating parameters!

Observe the permitted operating parameters, any operation exceeding this parameters can lead to malfunctions and may lead to damage on the instrument or the system.

- Do not exceed the permitted operating parameters.
- Make sure the product is operated in its permitted limitations.
- Do not exceed or undercut the permitted storage and operation temperature and pressure.
- The product should be maintained and calibrated frequently, at least annually.

General safety instructions

- It is not allowed to use the product in explosive areas.
- Please observe the national regulations before/during installation and operation.

Remarks

- It is not allowed to disassemble the product.
- Always use spanner to mount the product properly.

ATTENTION!

Measurement values can be affected by malfunction!

The product must be installed properly and frequently maintained, otherwise it may lead to wrong measurement values, which can lead to wrong results.

- Always observe the direction of the flow when installing the sensor. The direction is indicated on the housing.
- Do not exceed the maximum operation temperature at the sensors tip.
- Avoid condensation on the sensor element as this will affect accuracy enormously.

Storage and transportation

- Make sure that the transportation temperature of the sensor without display is between -30 °C ... 70 °C and with display between -10 °C ... 60 °C.
- For storage and transportation it is recommended to use the packaging which comes with the sensor.
- Please make sure that storage temperature of the sensor is between -10 °C ... 50 °C.
- Avoid direct UV and solar radiation during storage.
- For the storage the humidity must be <90%, no condensation.

2. Application

The S 421 is a flow sensor which is designed to measure the consumption of compressed air and gases within the permissible operating parameters. These parameters can be found in the technical data section.

The S 421 can measure the following values:

- Volume flow of the compressed air or gas.
- Total consumption of the compressed air or gas.

The default factory units are: Velocity in m/s, Volumetric flow in m^3/h and Total Consumption in m^3. Other units can be set by the optional display or the service kit.

The S 421 flow sensor is not developed to be used in explosive areas. For the use in explosive areas please contact the manufacturer.

The S 421 flow sensor is mainly used in compressed air systems in industrial environment.

3. Features

- Inline type sensor for high accuracy in small tube diameters
- Thermal mass flow measurement, virtually independent of pressure and temperature changes
- IP65 casing provides robust protection in the industrial environment.
- Very fast response time
- Particularly suitable for measuring process gases such as N_2, Ar, O_2, CO_2 etc
- Optional display directly on the sensor, showing velocity, volume flow and consumption
- Modbus interface (optional)
- Two gas calibration (optional)

4. Technical Data

4.1 General

CE	
Parameters	Standard unit flow: m^3/h Other units: m^3/min, l/min, l/s, cfm, kg/h, kg/min, kg/s Consumption units: m^3, ft^3 , kg
Reference conditions	ISO1217 20 °C 1000 mbar (Standard-Unit) DIN1343 0 °C 1013.25 mbar (Norm-Unit)
Principle of measurement	Thermal mass flow
Sensor	Glass coated resistive sensor
Measuring medium	Air, gas (non corrosive gas)
Operating temperature	-30 … 140 °C fluid temperature -30 … 70 °C casing -10 … 50 °C display (optional)
Humidity of the meas. medium	< 90%, no condensation
Operating pressure	0 … 1.6 MPa (Optional: 4.0 MPa)
Housing material	PC + ABS
Material of the probe tube, sensor head (welded parts)	Stainless steel 1.4404 (SUS 316L)
Protection class	IP65
Dimensions	See dimensional drawing on the next page
Display (optional)	2.4” colour graphics display with keypad
Tube diameter	DN15 … DN80
Process connection:	G1/2” (ISO 228/1)
Weight	0.6 kg (Instrument only, not including the measuring section)

4.2 Electrical Data

Power supply	15 ... 30 VDC, 200 mA

4.3 Output-Signals

Analogue output	Signal: 4 ... 20 mA, isolated Scaling: 0 to max flow Max load: 250R
Pulse output	1 pulse per consumption unit, isolated switch, max. 30 VDC, 200 mA (pulse length: 10 … 120 ms, depends on flow rate)
Modbus output	See chapter 9.3

4.4 Accuracy

Accuracy	± 1.5% of reading ± 0.3% FS (optional 1% of reading) Temperature drift: < 0.05%/K
Stated accuracy at	Ambient/process temperature 23°C ± 3°C Ambient/process humidity <90% Process pressure at 0.6 MPa
Repeatability	± 0.25% of reading

5. Dimensional drawing

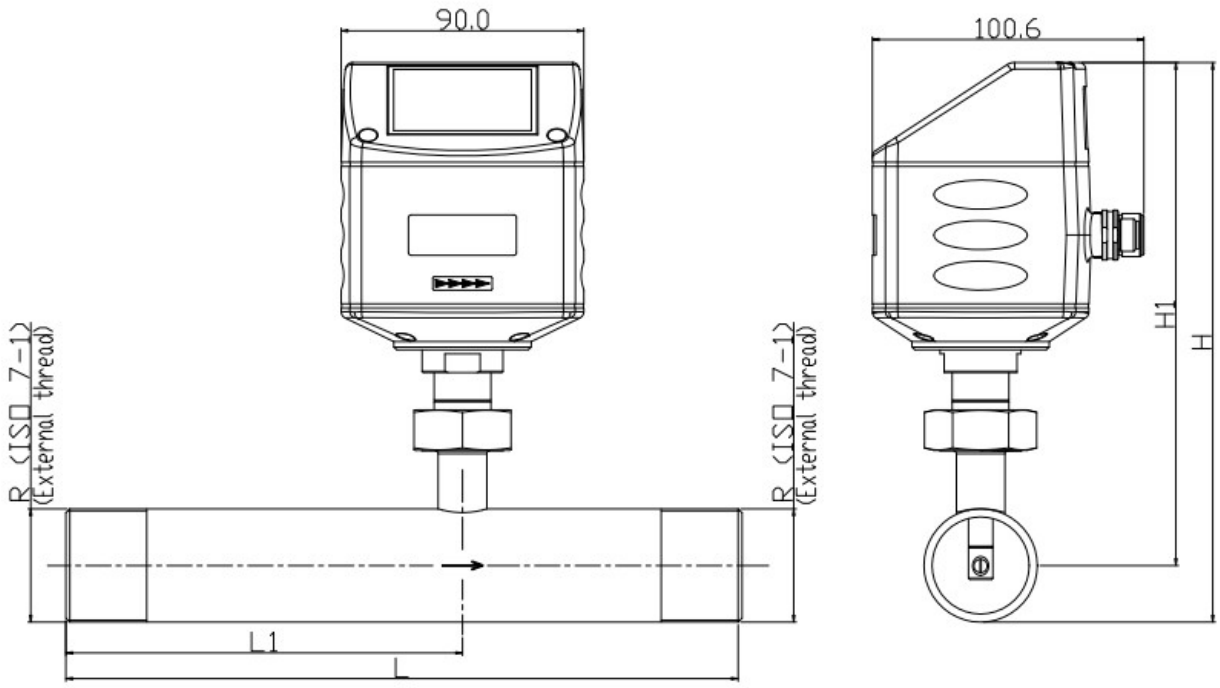

	Pipe nominal size inch(DN)	L total length [mm]	L1 inlet length [mm]	H total height [mm]	H1 from pipe center to casing top [mm]	R External thread
S 421-1/2”	1/2”/(DN15)	300	210	197.4	186.7	R 1/2”
S 421-3/4”	3/4”/(DN20)	475	275	200.2	186.7	R 3/4”
S 421-1”	1”/(DN25)	475	275	203.6	186.7	R 1”
S 421-1 1/4”	1 1/4”/ (DN32)	475	275	207.9	186.7	R 1 1/4”
S 421-1 1/2”	1 1/2”/ (DN40)	475	275	210.9	186.7	R 1 1/2”
S 421-2”	2”/(DN50)	475	275	216.9	186.7	R 2”
S 421-2 1/2”	2”/(DN65)	475	275	232.7	194.6	R 2 1/2”
S 421-3”	2”/(DN80)	475	275	245.5	201.0	R 3”

S 421 flange type

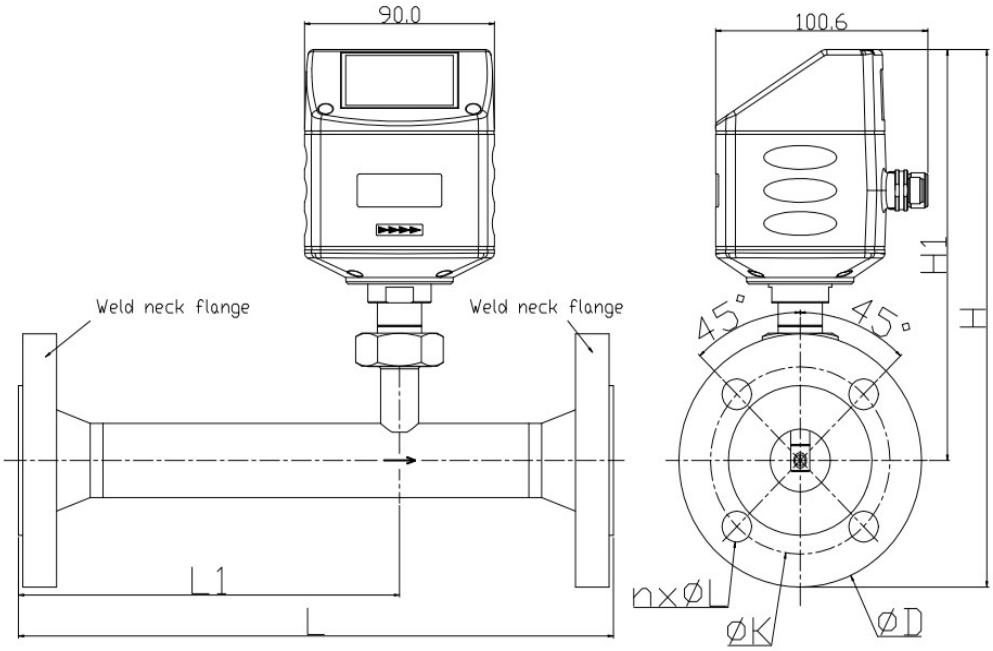

	Pipe nominal size inch(DN)	L total length [mm]	L1 inlet length [mm]	H total height [mm]	H1 from pipe center to casing top [mm]	Flange (EN 1092-1 PN40)		
						ØD (mm)	ØK (mm)	n x ØL (mm)
S 421-1/2″	1/2″/ (DN15)	300	210	234.2	186.7	95	65	4xØ14
S 421-3/4″	3/4″/ (DN20)	475	275	239.2	186.7	105	75	4xØ14
S 421-1″	1″/ (DN25)	475	275	244.2	186.7	115	85	4xØ14
S 421-1 1/4″	1 1/4″/ (DN32)	475	275	256.7	186.7	140	100	4xØ18
S 421-1 1/2″	1 1/2″/ (DN40)	475	275	261.7	186.7	150	110	4xØ18
S 421-2″	2″/ (DN50)	475	275	269.2	186.7	165	125	4xØ18
S 421-2 1/2″	2 1/2″ (DN65)	475	275	287.1	194.6	185	145	8xØ18
S 421-3″	3″/ (DN80)	475	275	301	201.0	200	160	8xØ18

	Pipe nominal size inch(DN)	L total length [mm]	L1 inlet length [mm]	H total height [mm]	H1 from pipe center to casing top [mm]	Flange (ANSI/B16.5 class 300)		
						ØD (mm)	ØK (mm)	n x ØL (mm)
S 421-1/2″	1/2″/ (DN15)	475	275	234.2	186.7	95.2	66.5	4xØ15.7
S 421-3/4″	3/4″/ (DN20)	475	275	245.4	186.7	117.3	82.5	4xØ19
S 421-1″	1″/ (DN25)	475	275	248.7	186.7	123.9	88.9	4xØ19
S 421-1 1/4″	1 1/4″/ (DN32)	475	275	253.4	186.7	133.3	98.5	4xØ19
S 421-1 1/2″	1 1/2″/ (DN40)	475	275	264.4	186.7	155.4	114.3	4xØ22.3
S 421-2″	2″/ (DN50)	475	275	269.3	186.7	165.1	127.0	4xØ19
S 421-2 1/2″	2 1/2″ (DN65)	475	275	289.9	194.6	190.5	149.3	8xØ22.3
S 421-3″	3″/ (DN80)	475	275	305.8	201.0	209.5	168.1	8xØ22.3

6. Installation considerations

In order to maintain the accuracy stated in the technical data, the sensor must be installed inline and fitted to tubes with the same diameter. Please make sure it exists unhindered flow characteristics. Unhindered flow characteristics are achieved if the section in front of the sensor (inlet) and behind the sensor (outlet) is sufficiently long, absolutely straight and free of obstructions such as edges, seams, curves etc..
Please consider that enough space exists at your site for a adequate installation as described in this manual.

ATTENTION!

Wrong measurement is possible, if the sensor is not installed correctly.

- Careful attention must be paid to the design of the inlet and outlet section. Obstructions can cause counter-flow turbulence as well as turbulence in the direction of the flow.
- The sensor is for indoor use only! At an outdoor installation, the sensor must be protected from solar radiation and rain.
- It is strongly recommend not to install S 421 permanently in wet environment as it exists usually right after a compressor outlet.

7. Inlet and Outlet sections

The thermal measuring principle may be sensible to inlet and outlet conditions. For this we recommend the following minimum straight inlet and outlet sections to ensure an accurate measurement. Sensor should be always installed upstream from obstacles like valves, filter, reductions etc. In common the sensor should be installed as far as possible away from any disturbances.

Note: If there is any combination of the below, the longest straight inlet section must be maintained.

The S 421 sensor comes with its own measuring section and a straight inlet section, nevertheless additional straight inlet sections must be added to measuring sections to fulfill the minimum inlet requirements.

Please refer to the installation types below and select your additional inlet section 'LA' from the table.

Note: The additional inlet sections depend on the pipe diameter. The units for the length are in mm.

1

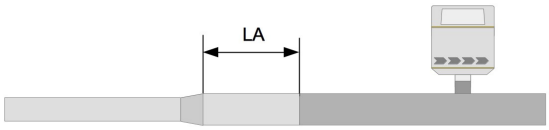

2

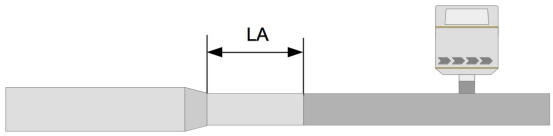

3

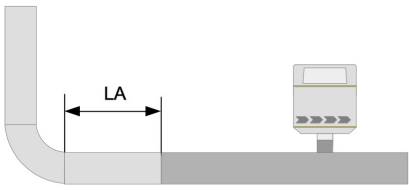

4

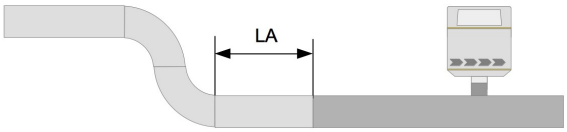

5

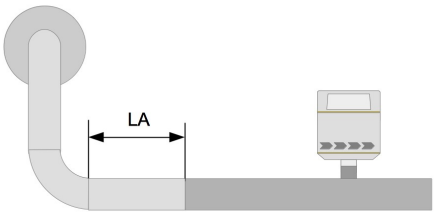

6

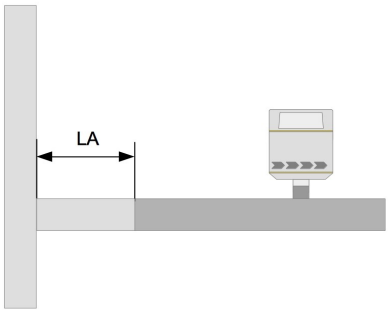

7

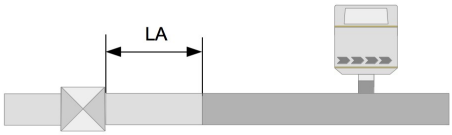

8

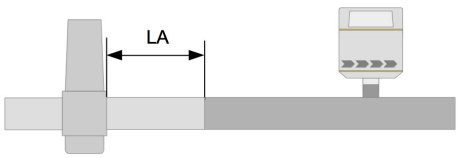

1. Expansion

Section size	DN15	DN20	DN25	DN32	DN40	DN50	DN65	DN80
LA (mm)	110	160	270	440	560	790	1100	1300

2. Reduction

Section size	DN15	DN20	DN25	DN32	DN40	DN50	DN65	DN80
LA (mm)	110	160	270	440	560	790	1100	1300

3. 90° Bend

Section size	DN15	DN20	DN25	DN32	DN40	DN50	DN65	DN80
LA (mm)	110	160	270	440	560	790	1100	1300

4. 2 x 90° Bend

Section size	DN15	DN20	DN25	DN32	DN40	DN50	DN65	DN80
LA (mm)	190	270	410	620	770	1100	1500	1700

5. 3 dimensional Bend

Section size	DN15	DN20	DN25	DN32	DN40	DN50	DN65	DN80
LA (mm)	430	590	810	1200	1400	1800	2500	3000

6. T-piece

Section size	DN15	DN20	DN25	DN32	DN40	DN50	DN65	DN80
LA (mm)	190	270	410	620	770	1100	1500	1700

7. Shut-off value

Section size	DN15	DN20	DN25	DN32	DN40	DN50	DN65	DN80
LA (mm)	590	810	1100	1500	1800	2400	3200	3800

8. Filter or similar (unknown objects)

Section size	DN15	DN20	DN25	DN32	DN40	DN50	DN65	DN80
LA (mm)	590	810	1100	1500	1800	2400	3200	3800

8. Sensor Installation

Before installing the sensor, please make sure that all components listed below are included in your package.

Qty	Description	Item No.
1	Sensor	S695 4120
1	Sealing ring	No P/N
2	M12 plug	C219 0059
1	Instruction manual	No P/N
1	Calibration certificate	No P/N
1	Measuring section	A1301 ... A1308 (R thread) A1321 ... A1328 (Flange, EN-1092-1) A1341 … A1348 (Flange, ANSI 16.5)

The S 421 is always shipped with mounted measurement section.

Please make sure that the sensor is installed correctly to the flow direction in the tube. For this observe the flow direction indicated on the housing, it must match the flow direction of the compressed air or gas. The gas flows from the inlet (long pipe section) to the outlet (short pipe section) like illustrated in the picture below.

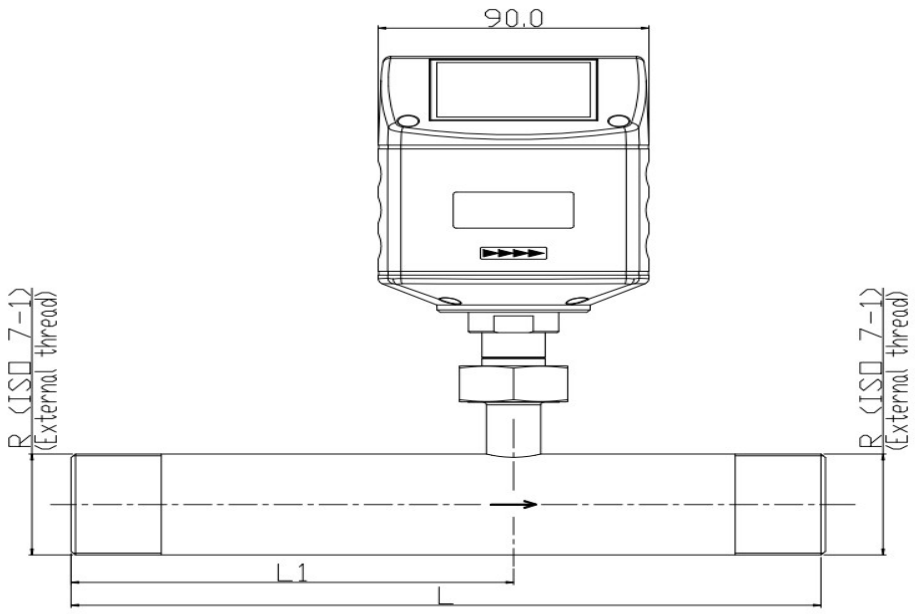

8.1 Removal of the flow sensor

The following steps explain the procedure of an appropriate removal of the sensor.

ATTENTION!

Only remove the sensor if the system is in a pressureless condition.

1. Hold the flow sensor.
2. Release the terminal nut at the connection thread.
3. Pull out the shaft slowly.
4. The measuring section can be closed with the optional closing cap, so the system can be operated normal during maintenance.

Re-installation after maintenance:

- The re-installation of the measurement device is simple as the sensor unit fits into the pipe section only in one position.
- Please make sure that the o-ring is inserted.
- Close the terminal nut tightly to mount the sensor correctly.

8.2 Electrical connection

The flow sensor is equipped with two connector plugs “A” and “B”. The cables are connected to the sensor through the M12 connector.

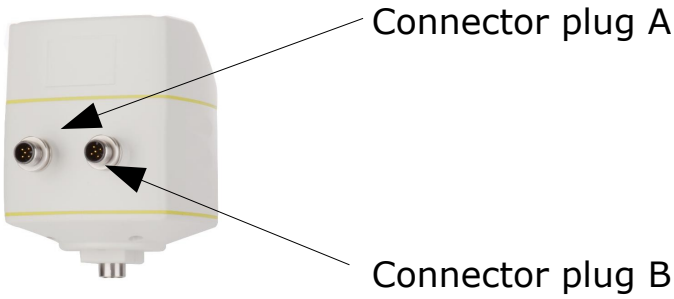

Connection pins connector plug M12

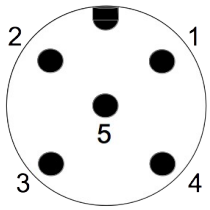

Connection pins
(top view on the sensor)

Pin assignment connector plug M12

Output Version	Connector	Pin 1	Pin 2	Pin 3	Pin 4	Pin 5
Modbus (P/N: A1411)	A	SDI	-VB	+VB	DIR	DIR
	B	GND	-VB	+VB	D+	D-
4 … 20mA plus pulse (P/N: A1410)	A	SDI	-VB	+VB	DIR	DIR
	B	NA	SW	SW	+I	-I
4 … 20mA Plus pulse, compatible to S 400 (P/N: A1413)	A	SDI	-VB	+VB	+I	+P
	B	NA	-VB	DIR	SW	SW
Wire colour		brown	white	blue	black	grey

Legend to pin assignment

GND:	Ground for Modbus
SDI:	Digital signal (internal use)
-VB:	Negative supply voltage
+VB:	Positive supply voltage
+I:	Positive 4 ... 20 mA signal
-I:	Negative 4 ... 20 mA signal
+P:	Pulse output
SW:	Isolated pulse output
DIR	Flow direction input
D+:	Modbus data +
D-:	Modbus data -
M:	M-Bus data
NA:	Not applicable

ATTENTION!

Do not screw the M12 plug using force. Otherwise, it may damage the connecting pins.

9. Sensor signal outputs

9.1 Analog output

The sensor has an analog output range of 4 ... 20 mA. This output can be scaled to match a desired measuring range. Standard scaling is from 0 to max flow. The corresponding flow in different pipe sizes can be found in Appendix A. For other ranges, please contact the manufacturer.

9.2 Pulse output

The sensor sends out one pulse per consumption unit. This pulse output can be connected to an external pulse counter to count the total consumption. The number of m^3 per second is summed up and indicated after one second. Pulse length depends on flow rate.

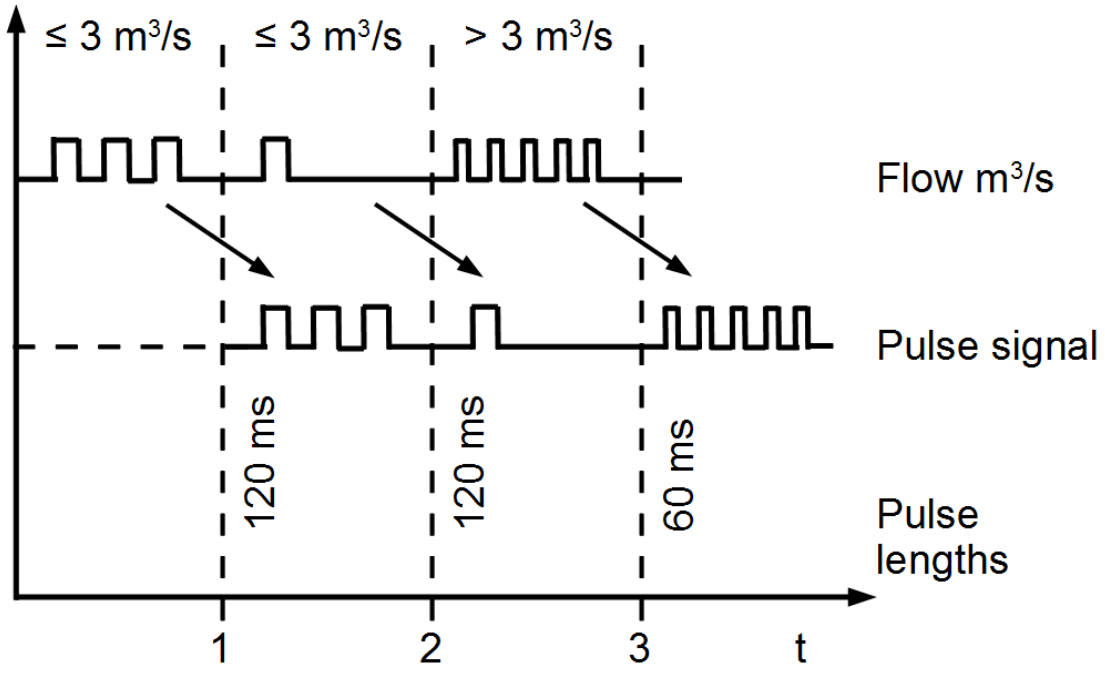

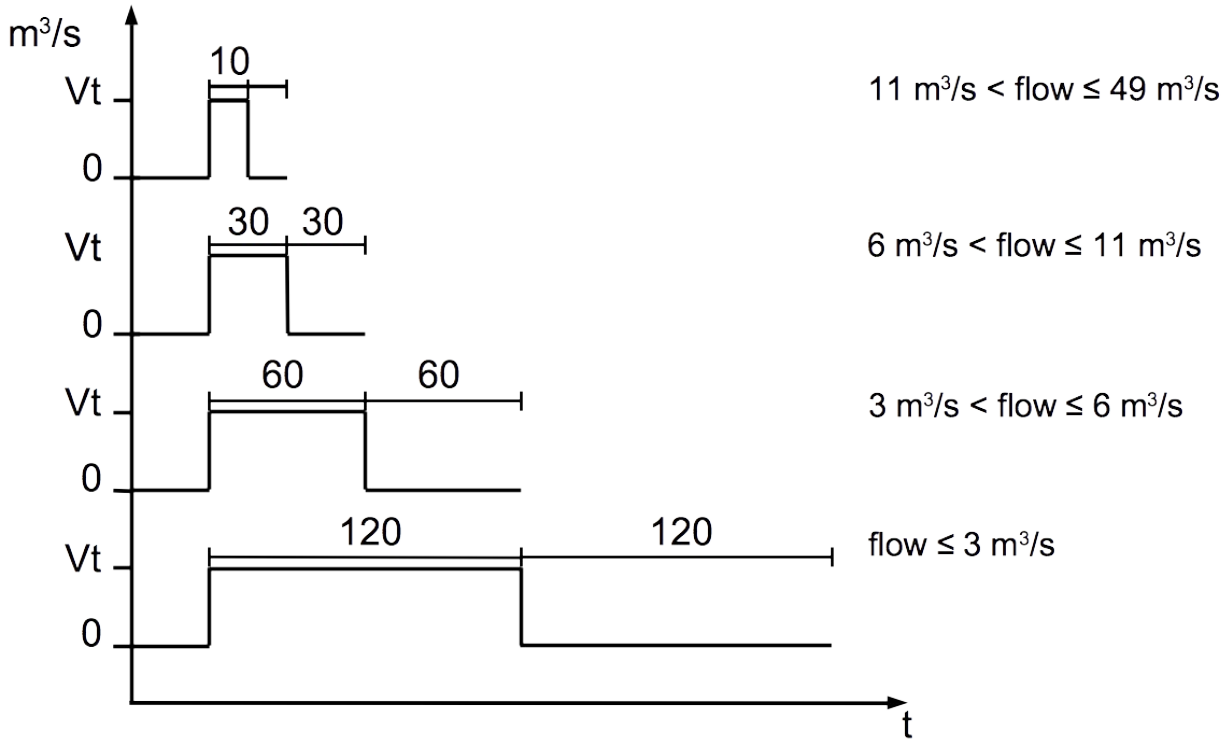

If the flow rate is too high, the S 421 cannot output the pulses with default settings (one pulse per consumption unit). In this case, the pulse can be set by our service software or a connected display to 1 pulse per 10 consumption units or 1 pulse per 100 consumption units. For example, if set to 1 pulse per 10 m^3, the sensor sends one pulse each 10 m^3. Example (1 pulse per 10 m^3):

Volumetric flow [m^3/s]	Volumetric flow [m^3/h]	Pulse length [ms]	Max. pulse output per hour
≦ 3	≦ 10800	120	1080
> 3	> 10800	60	2880
> 6	> 21600	30	3960

9.2.1 Pulse Connection Diagram

Variant 1:

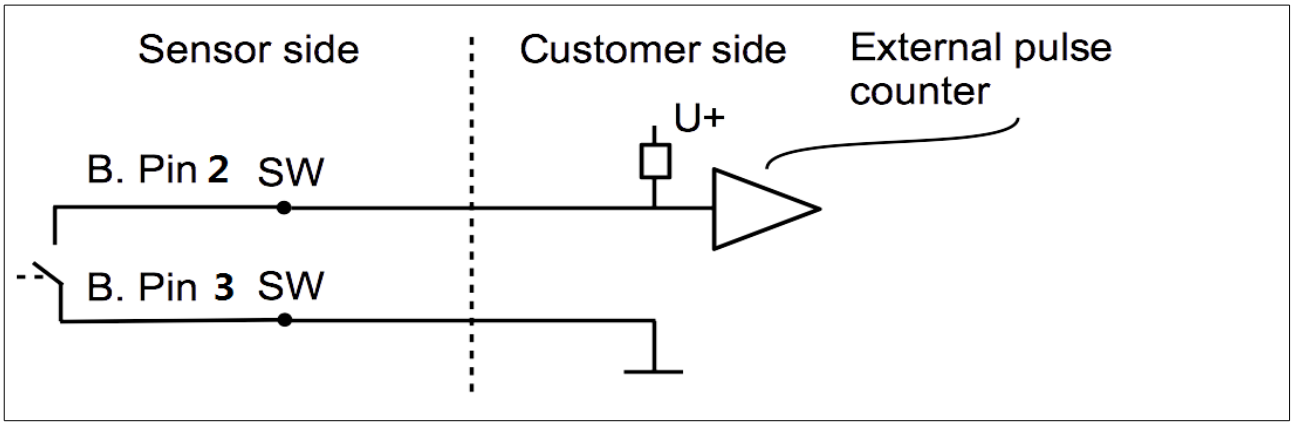

Variant 2:

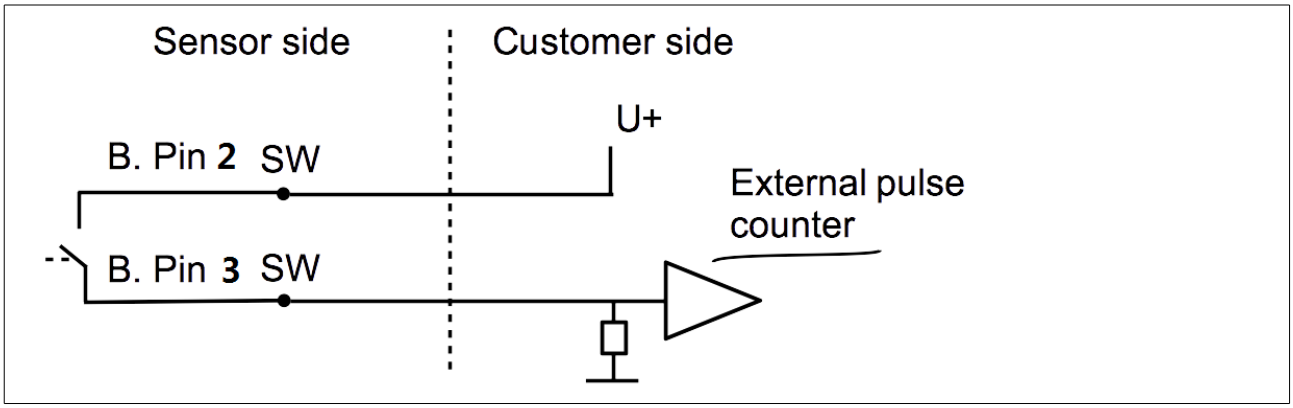

9.3 Modbus output

Mode	:	RTU
Baud rate	:	19200
Device address	:	1
Framing / parity / stop bit	:	8, N, 1
Response time	:	1 second
Response delay	:	0 ms
Inter-frame spacing	:	7 char

Remarks

You can change Modbus communication settings using the S4C-FS Service App and the optional local display. For instructions, see the next two chapters.

Index	Channel description	Resolution	Format	Length	Modbus address
1	Flow	0.1	FLOAT	4-Byte	6
2	Consumption	1	UNIT32	4-Byte	8
3	Temperature	0.1	FLOAT	4-Byte	0
4	Reverse flow	0.1	FLOAT	4-Byte	12

Remark

- All numbers are in the little-endian format.
- Function code: 03.
- Different units have different precisions.
- The measurement values are always available in the programmed physical units.

10. Sensor display (option)

The Sensor display shows values of the flow and the consumption. Moreover it shows error messages and enables you to change the configuration settings for the sensor.

"Enter key" =

"Up key" =

"Down key" =

10.1 Starting process

After powered up, the display starts automatically with an initialization procedure. During the next eight seconds the display shows the current software version and starts to build connection with the sensor. Finally, the display enters the standard mode, showing the online values as shown below.

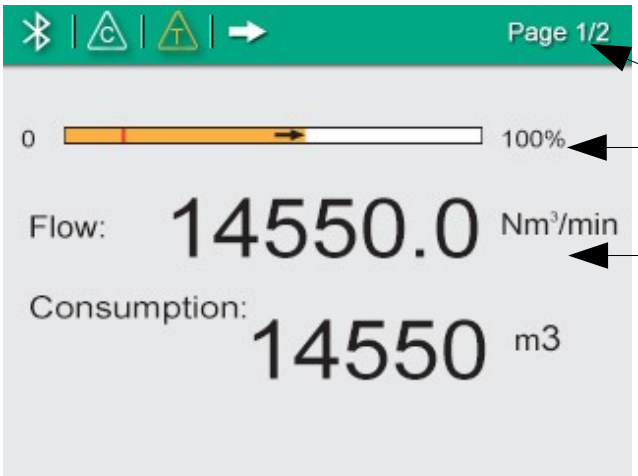

Home page:

- Status bar
- Moving bar to indicate flow value
- Measurement values

10.2 Configuration using the display

The following settings can be changed via display or service software.

- Gas type – select the gas to be measured.
- Flow unit – select unit for flow value.

For this please observe the following steps:

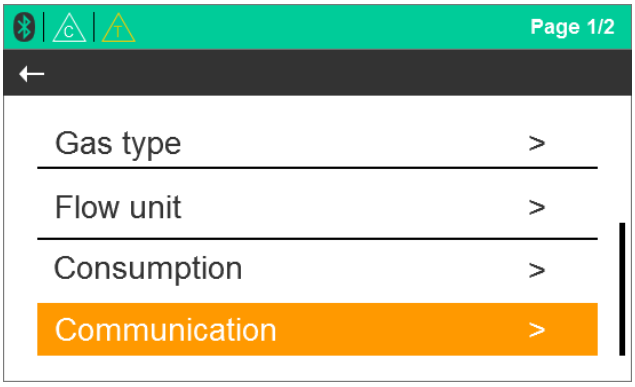

1. Press “Enter” (>3s) key to check and change settings (unlock code:12).

2. Use the “Up” and “Down” key on the keyboard to choose the setting which should be changed.

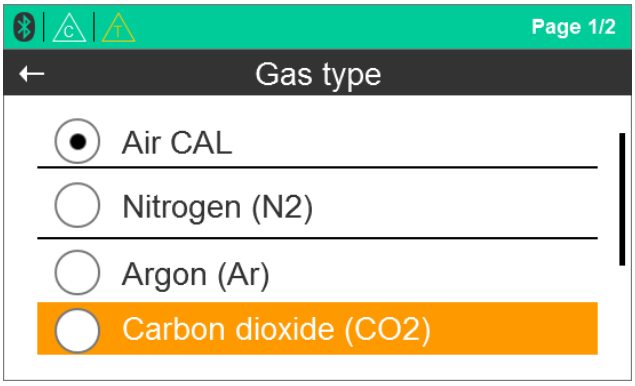

3. Use these two buttons to select a desired entry box or adjust the values.

4. Press the “Enter” button to confirm the changes.

11. Service App—S4C-FS

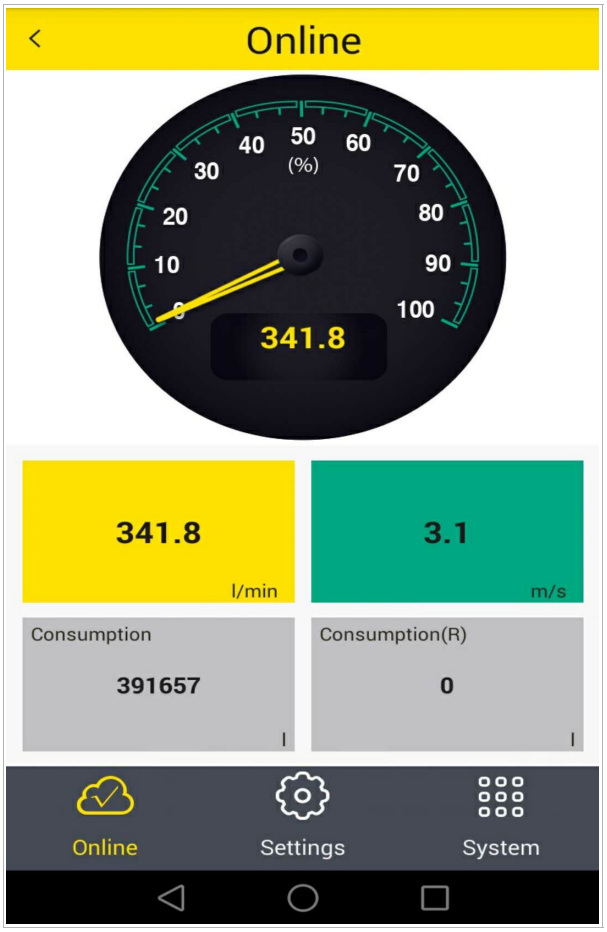

To change any setting on the S 421, please download the service app from the Google Play. This app runs on any Android system with BlueTooth supported. To change settings, the app needs to scan the QR code on the calibration certificate at first. This ensures that only valid users can access the sensor settings.

For more information about instructions on S4C-FS, see the *S4C-FS Instruction and Operation Manual*, which is available for download on the SUTO iTEC Website.

ATTENTION!

Changes on the settings may lead to wrong measurement results! Contact the manufacturer in case that you are not familiar with the settings.

12. Calibration

The sensor is calibrated ex work. The exact calibration date is printed on the certificate which is supplied together with the sensor. The accuracy of the sensor is regulated by the on-site conditions, and parameters such as oil, high humidity or other impurities can affect the calibration and furthermore the accuracy. However we recommend you calibrate the instrument at least once per year. The calibration is excluded from the instruments warranty. For the calibration service, please contact the manufacturer.

13. Maintenance

To clean the sensor, it is recommended to use distilled water or isopropyl alcohol only.

ATTENTION!

Do not touch the surface of the sensor plate.

Avoid mechanical impact on the sensor (e.g. with a sponge or a brush).

If the contamination can not be removed the sensor must be inspected and maintained by the manufacturer.

14. Disposal or waste

Electronic devices are recyclable material and do not belong in the household waste.

The sensor, the accessories and its packings must be disposed according to your local statutory requirements. The dispose can also be carried by the manufacturer of the product, for this please contact the manufacturer.

15. Warranty

SUTO provides a warranty for this product of 24 months covering the material and workmanship under the stated operating conditions from the date of delivery. Please report any findings immediately and within the warranty time. If faults occur during the warranty time, SUTO will repair or replace the defective unit, without charge for labour and material costs but there is a charge for other service such as transport and packing costs.
Excluded from this warranty is:

- Damage caused by:
  - Improper use and non-adherence to the instruction manual.
  - Use of unsuitable accessories.
  - External influences (e.g. damage caused by vibration, damage during transportation, excess heat or moisture). The warranty is cancelled:
- If the user opens the measurement instrument without a direct request written in this instruction manual.
- If repairs or modifications are undertaken by third parties or unauthorised persons.
- If the serial number has been changed, damaged or removed.

Other claims, especially those for damage occurring outside the instrument are not included unless responsibility is legally binding.

Warranty repairs do not extend the period of warranty.

ATTENTION!

Batteries have a reduced warranty time of 12 months.

Appendix A Analogue output

Scaling table of analogue output:

Medium: Air at ISO 1217; 20°C; 1000 mbar

Tube			Flow							
Inch	**Nominal Diameter**	**mm**	**m³/h**	**m³/min**	**l/min**	**l/s**	**cfm**	**kg/h**	**kg/min**	**kg/s**
1/2”	**DN 15**	**16.10**	90.0	1.50	1500.1	25.00	53.0	107.0	1.78	0.03
3/4”	**DN 20**	**21.70**	170.0	2.80	2833.3	47.20	100.0	202.1	3.37	0.06
1”	**DN 25**	**27.30**	290.0	4.80	4833.4	80.60	170.7	344.7	5.74	0.10
1 1/4”	**DN 32**	**36.00**	500.0	8.33	8,333	138.89	294.3	593.9	9.90	0.16
1 1/2”	**DN 40**	**41.90**	700.0	11.67	11,667	194.44	412.0	831.4	13.86	0.23
2”	**DN 50**	**53.10**	1,000.0	16.67	16,667	277.78	588.6	1,187.8	19.80	0.33
2 1/2”	**DN 65**	**68.90**	1,500.0	25.00	25,000	416.67	882.9	1,781.7	29.69	0.49
3”	**DN 80**	**80.90**	2,500.0	41.67	41,667	694.44	1,471.4	2,969.4	49.49	0.82

Medium: Other gases at DIN 1343; 0°C; 1013.25 mbar

Tube				N_2		CO_2		O_2	
Inch	Nominal Diameter	mm	PF	m³/h	cfm	m³/h	cfm	m³/h	cfm
1/2”	DN 15	16.1	0.671	80.00	47.10	82.90	48.80	85.80	50.50
3/4”	DN 20	21.7	0.722	151.20	89.00	156.50	92.10	162.10	95.40
1”	DN 25	27.3	0.756	257.90	151.80	267.00	157.10	276.50	162.70
1 1/4”	DN 32	36	0.784	444.7	261.8	460.5	271.0	476.8	280.6
1 1/2”	DN 40	41.9	0.797	622.6	366.5	644.7	379.4	667.5	392.9
2”	DN 50	53.1	0.812	889.4	523.5	921.0	542.1	953.6	561.3
2 1/2”	DN 65	68.9	0.825	1334.2	785.3	1381.4	813.1	1430.4	841.9
3”	DN 80	80.9	0.830	2223.6	1308.8	2302.4	1355.1	2384.1	1403.2

Tube			Nat. Gas		Ar		He	
nominal Diameter	mm	PF	m³/h	cfm	m³/h	cfm	m³/h	cfm
DN 15	16.1	0.671	53.30	31.30	145.60	85.70	23.50	13.80
DN 20	21.7	0.722	100.60	59.20	275.00	161.90	46.00	27.10
DN 25	27.3	0.756	171.60	101.00	469.20	276.10	76.20	44.80
DN 32	36	0.784	296.0	174.2	809.1	476.2	63.5	37.4
DN 40	41.9	0.797	414.3	243.9	1132.7	666.7	89.0	52.4
DN 50	53.1	0.812	591.9	348.4	1618.2	952.4	127.1	74.8
DN 65	68.9	0.825	887.9	522.6	2427.3	1428.6	190.6	112.2
DN 80	80.9	0.830	1479.8	870.9	4045.5	2381.1	317.7	187.0

Appendix B Modbus communication example

03 (0x03) Read holding register

Request		Response	
Slave address	1 byte	Slave address	1 byte
Function code	1 byte	Function code	1 byte
Starting address Hi	1 byte	Byte count	1 byte
Starting address Lo	1 byte	Register Hi	1 byte
No. of points Hi	1 byte	Register Lo	1 byte
No. of points Lo	1 byte	:	:
CRC	2 bytes	Register Hi	1 byte
		Register Lo	1 byte
		CRC	2 bytes

05 (0x05) Write single coil

Request		Response	
Slave address	1 byte	Slave address	1 byte
Function code	1 byte	Function code	1 byte
Coil address Hi	1 byte	Coil address Hi	1 byte
Coil address Lo	1 byte	Coil address Lo	1 byte
Data Hi	1 byte	Data Hi	1 byte
Data Lo	1 byte	Data L	1 byte
CRC	2 bytes	CRC	2 bytes

16 (0x10) Write multiple registers

Request		Response	
Slave address	1 byte	Slave address	1 byte
Function code	1 byte	Function code	1 byte
Starting address Hi	1 byte	Starting address Hi	1 byte
Starting address Lo	1 byte	Starting address Lo	1 byte
No. of registers Hi	1 byte	No. of registers Hi	1 byte
No. of registers Lo	1 byte	No. of registers Lo	1 byte
Byte count	1 byte	CRC	2 bytes
Data Hi	1 byte		
Data Lo	1 byte		
:	:		
Data Hi	1 byte		
Data Lo	1 byte		
CRC	2 bytes		

17 (0x11) Report slave ID

Request		Response	
Slave address	1 byte	Slave address	1 byte
Function code	1 byte	Function code	1 byte
CRC	2 bytes	Byte count	1 byte
		Slave ID	2 bytes
		Device run indicator	2 bytes
		Product code	2 bytes
		Product name	20 bytes
		CRC	2 bytes

Appendix C LRC and CRC calculation

LRC generation

The Longitudinal Redundancy Checking (LRC) field is one byte, containing an 8–bit binary value. The LRC value is calculated by the transmitting device, which appends the LRC to the message. The device that receives recalculates an LRC during receipt of the message, and compares the calculated value to the actual value it received in the LRC field. If the two values are not equal, an error results.

The LRC is calculated by adding together successive 8–bit bytes in the message, discarding any carries, and then two's complementing the result. The LRC is an 8–bit field, therefore each new addition of a character that would result in a value higher than 255 decimal simply 'rolls over' the field's value through zero. Because there is no ninth bit, the carry is discarded automatically.

A procedure for generating an LRC is:

1. Add all bytes in the message, excluding the starting 'colon' and ending CRLF. Add them into an 8–bit field, so that carries will be discarded.
2. Subtract the final field value from FF hex (all 1's) to produce the ones–complement.
3. Add 1 to produce the twos–complement.

Placing the LRC into the Message

When the 8–bit LRC (2 ASCII characters) is transmitted in the message, the high–order character will be transmitted first, followed by the low–order character. For example, if the LRC value is 61 hex (0110 0001):

Colon	Addr	Func	Data Count	Data	Data	Data	Data	LRC Hi	LRC Lo	CR	LF
								"6" 0x36	"1" 0x31		

Example: an example of a C language function performing LRC generation is shown below.

The function takes two arguments:

```
unsigned char *auchMsg; /* A pointer to the message buffer containing binary data */
                        /* to be used for generating the LRC,                      */
unsigned short usDataLen; /* The quantity of bytes in the message buffer.          */
```

LRC generation function

```
static unsigned char LRC(unsigned char *auchMsg, unsigned short usDataLen)
 {
        unsigned char uchLRC = 0 ;                          /* LRC char initialized */
        while (usDataLen––)                            /* pass through message buffer */
                uchLRC += *auchMsg++ ;              /* add buffer byte without carry */
        return ((unsigned char)(–((char)uchLRC))) ;   /* return twos complement */
}
```

CRC generation

The **C**yclical **R**edundancy **C**hecking (CRC) field is two bytes, containing a 16-bit binary value. The CRC value is first generated by the transmitting device, which appends the CRC to the message. The device that receives recalculates a CRC during receipt of the message, and compares the calculated value to the actual value it received in the CRC field. If the two values are not equal, an error results.

There are many ways of calculating a CRC checksum. To ensure correct calculation, please refer to [Reference 1] Modbus over serial line, where detailed descriptions and programming examples are available. Even more information and programming examples in different programming languages can be found on: www.modbus.org searching for CRC.

Below is a short text description of how the CRC is calculated. This description is then followed by a C programming example.

1. Load a 16-bit register with FFFF hex (all 1's). Call this the CRC register.
2. Exclusive OR the first 8-bit byte of the message with the low-order byte of the 16-bit CRC register, putting the result in the CRC register.
3. Shift the CRC register one bit to the right (toward the LSB), zero-filling the MSB. Extract and examine the LSB.
4. (If the LSB was 0): Repeat step 3 (another shift). (If the LSB was 1): Exclusive OR the CRC register with the polynomial value 0xA001 (1010 0000 0000 0001).
5. Repeat steps 3 and 4 until 8 shifts have been performed. When this is done, a complete 8-bit byte will have been processed.
6. Repeat steps 2 through 5 for the next 8-bit byte of the message. Continue doing this until all bytes have been processed.
7. The final content of the CRC register is the CRC value.

8. When the CRC is placed into the message, its upper and lower bytes must be swapped as described below.

Placing the CRC into the message

When the 16-bit CRC (two 8-bit bytes) is transmitted in the message, the low-order byte will be transmitted first, followed by the high-order byte.

For example, if the CRC value is 1241 hex (0001 0010 0100 0001):

Addr	Func	Data count	Data	Data	Data	Data	CRC Lo	CRC Hi
							0x41	0x12

High-order byte table

```
/* Table of CRC values for high–order byte */
static unsigned char auchCRCHi[] = {
0x00, 0xC1, 0x81, 0x40, 0x01, 0xC0, 0x80, 0x41, 0x01, 0xC0, 0x80, 0x41, 0x00,
0xC1, 0x81, 0x40, 0x01, 0xC0, 0x80, 0x41, 0x00, 0xC1, 0x81, 0x40, 0x00, 0xC1,
0x81, 0x40, 0x01, 0xC0, 0x80, 0x41, 0x01, 0xC0, 0x80, 0x41, 0x00, 0xC1, 0x81,
0x40, 0x00, 0xC1, 0x81, 0x40, 0x01, 0xC0, 0x80, 0x41, 0x00, 0xC1, 0x81, 0x40,
0x01, 0xC0, 0x80, 0x41, 0x01, 0xC0, 0x80, 0x41, 0x00, 0xC1, 0x81, 0x40, 0x01,
0xC0, 0x80, 0x41, 0x00, 0xC1, 0x81, 0x40, 0x00, 0xC1, 0x81, 0x40, 0x01, 0xC0,
0x80, 0x41, 0x00, 0xC1, 0x81, 0x40, 0x01, 0xC0, 0x80, 0x41, 0x01, 0xC0, 0x80,
0x41, 0x00, 0xC1, 0x81, 0x40, 0x00, 0xC1, 0x81, 0x40, 0x01, 0xC0, 0x80, 0x41,
0x01, 0xC0, 0x80, 0x41, 0x00, 0xC1, 0x81, 0x40, 0x01, 0xC0, 0x80, 0x41, 0x00,
0xC1, 0x81, 0x40, 0x00, 0xC1, 0x81, 0x40, 0x01, 0xC0, 0x80, 0x41, 0x01, 0xC0,
0x80, 0x41, 0x00, 0xC1, 0x81, 0x40, 0x00, 0xC1, 0x81, 0x40, 0x01, 0xC0, 0x80,
0x41, 0x00, 0xC1, 0x81, 0x40, 0x01, 0xC0, 0x80, 0x41, 0x01, 0xC0, 0x80, 0x41,
0x00, 0xC1, 0x81, 0x40, 0x00, 0xC1, 0x81, 0x40, 0x01, 0xC0, 0x80, 0x41, 0x01,
0xC0, 0x80, 0x41, 0x00, 0xC1, 0x81, 0x40, 0x01, 0xC0, 0x80, 0x41, 0x00, 0xC1,
0x81, 0x40, 0x00, 0xC1, 0x81, 0x40, 0x01, 0xC0, 0x80, 0x41, 0x00, 0xC1, 0x81,
0x40, 0x01, 0xC0, 0x80, 0x41, 0x01, 0xC0, 0x80, 0x41, 0x00, 0xC1, 0x81, 0x40,
0x01, 0xC0, 0x80, 0x41, 0x00, 0xC1, 0x81, 0x40, 0x00, 0xC1, 0x81, 0x40, 0x01,
0xC0, 0x80, 0x41, 0x01, 0xC0, 0x80, 0x41, 0x00, 0xC1, 0x81, 0x40, 0x00, 0xC1,
0x81, 0x40, 0x01, 0xC0, 0x80, 0x41, 0x00, 0xC1, 0x81, 0x40, 0x01, 0xC0, 0x80,
0x41, 0x01, 0xC0, 0x80, 0x41, 0x00, 0xC1, 0x81,0x40
} ;
```

Low-order byte table

```
/* Table of CRC values for low–order byte */
static char auchCRCLo[] = {
0x00, 0xC0, 0xC1, 0x01, 0xC3, 0x03, 0x02, 0xC2, 0xC6, 0x06, 0x07, 0xC7, 0x05,
0xC5, 0xC4, 0x04, 0xCC, 0x0C, 0x0D, 0xCD, 0x0F, 0xCF, 0xCE, 0x0E, 0x0A, 0xCA,
0xCB, 0x0B, 0xC9, 0x09, 0x08, 0xC8, 0xD8, 0x18, 0x19, 0xD9, 0x1B, 0xDB, 0xDA,
0x1A, 0x1E, 0xDE, 0xDF, 0x1F, 0xDD, 0x1D, 0x1C, 0xDC, 0x14, 0xD4, 0xD5, 0x15,
0xD7, 0x17, 0x16, 0xD6, 0xD2, 0x12, 0x13, 0xD3, 0x11, 0xD1, 0xD0, 0x10, 0xF0,
0x30, 0x31, 0xF1, 0x33, 0xF3, 0xF2, 0x32, 0x36, 0xF6, 0xF7, 0x37, 0xF5, 0x35,
0x34, 0xF4, 0x3C, 0xFC, 0xFD, 0x3D, 0xFF, 0x3F, 0x3E, 0xFE, 0xFA, 0x3A, 0x3B,
```

```
0xFB, 0x39, 0xF9, 0xF8, 0x38, 0x28, 0xE8, 0xE9, 0x29, 0xEB, 0x2B, 0x2A, 0xEA,
0xEE, 0x2E, 0x2F, 0xEF, 0x2D, 0xED, 0xEC, 0x2C, 0xE4, 0x24, 0x25, 0xE5, 0x27,
0xE7, 0xE6, 0x26, 0x22, 0xE2, 0xE3, 0x23, 0xE1, 0x21, 0x20, 0xE0, 0xA0, 0x60,
0x61, 0xA1, 0x63, 0xA3, 0xA2, 0x62, 0x66, 0xA6, 0xA7, 0x67, 0xA5, 0x65, 0x64,
0xA4, 0x6C, 0xAC, 0xAD, 0x6D, 0xAF, 0x6F, 0x6E, 0xAE, 0xAA, 0x6A, 0x6B, 0xAB,
0x69, 0xA9, 0xA8, 0x68, 0x78, 0xB8, 0xB9, 0x79, 0xBB, 0x7B, 0x7A, 0xBA, 0xBE,
0x7E, 0x7F, 0xBF, 0x7D, 0xBD, 0xBC, 0x7C, 0xB4, 0x74, 0x75, 0xB5, 0x77, 0xB7,
0xB6, 0x76, 0x72, 0xB2, 0xB3, 0x73, 0xB1, 0x71, 0x70, 0xB0, 0x50, 0x90, 0x91,
0x51, 0x93, 0x53, 0x52, 0x92, 0x96, 0x56, 0x57, 0x97, 0x55, 0x95, 0x94, 0x54,
0x9C, 0x5C, 0x5D, 0x9D, 0x5F, 0x9F, 0x9E, 0x5E, 0x5A, 0x9A, 0x9B, 0x5B, 0x99,
0x59, 0x58, 0x98, 0x88, 0x48, 0x49, 0x89, 0x4B, 0x8B, 0x8A, 0x4A, 0x4E, 0x8E,
0x8F, 0x4F, 0x8D, 0x4D, 0x4C, 0x8C, 0x44, 0x84, 0x85, 0x45, 0x87, 0x47, 0x46,
0x86, 0x82, 0x42, 0x43, 0x83, 0x41, 0x81, 0x80, 0x40
};
 unsigned short CRC16(unsigned char *puchMsg, unsigned short usDataLen){
   unsigned char uchCRCHi = 0xFF;                        /* high byte of CRC initialized
 */
   unsigned char uchCRCLo = 0xFF;                        /* low byte of CRC initialized
 */
   unsigned uIndex ;                                     /* will index into CRC lookup
 table */
   while(usDataLen—)                                     /* pass through message
 buffer */
   {
           uIndex = uchCRCHi ^ *puchMsg++ ;              /* calculate the CRC */
           uchCRCHi = uchCRCLo ^ auchCRCHi[uIndex] ;
           uchCRCLo = auchCRCLo[uIndex] ;
    }
    return (unsigned short int)((uchCRCHi << 8) | uchCRCLo);
 }
```

FCC Statement:

This device complies with part 15 of the FCC rules Operation is subject to the following two conditions: (1) this device may not cause harmful interference, and (2) this device must accept any interference received, including interference that may cause undesired operation.

NOTE: The manufacturer is not responsible for any radio or TV interference caused by unauthorized modifications to this equipment. Such modifications could void the user's authority to operate the equipment.

NOTE: This equipment has been tested and found to comply with the limits for a Class B digital device, pursuant to part 15 of the FCC Rules. These limits are designed to provide reasonable protection against harmful interference in a residential installation. This equipment generates uses and can radiate radio frequency energy and, if not installed and used in accordance with the instructions, may cause harmful interference to radio communications. However, there is no guarantee that interference will not occur in a particular installation. If this equipment does cause harmful interference to radio or television reception, which can be determined by turning the equipment off and on, the user is encouraged to try to correct the interference by one or more of the following measures:

- Reorient or relocate the receiving antenna.
- Increase the separation between the equipment and receiver.
-Connect the equipment into an outlet on a circuit different from that to which the receiver is connected.
-Consult the dealer or an experienced radio/TV technician for help
− This device and its antenna(s) must not be co-located or operating in conjunction with any other antenna or transmitter.

RF Exposure Information and Statement :

This equipment complies with FCC radiation exposure limits set forth for an uncontrolled environment. This equipment should be installed and operated with minimum distance of 20 cm between the radiator and your body. This transmitter must not be co-located or operating in conjunction with any other antenna or transmitter

SUTO iTEC GmbH
Werkstr. 2
79426 Buggingen
Germany

Tel: +49 (0) 7631 936889-0
Fax: +49 (0) 7631 936889-19
Email: sales@suto-itec.com
Website: http://www.suto-itec.com

SUTO iTEC (ASIA) Co., Ltd.
Room 10, 6/F, Block B, Cambridge Plaza
188 San Wan Road, Sheung Shui, N.T.
Hong Kong

Tel: +852 2328 9782
Fax: +852 2671 3863
Email: sales@suto-itec.asia
Website: http://www.suto-itec.com

All rights reserved ©

Modifications and errors reserved.
S421_im_en_2019-1