English

Instruction and operation manual

S430

Pitot tube flow sensor

Dear Customer,

Thank you for choosing our product.

The operating instructions must be read in full and carefully observed before starting up the device. The manufacturer cannot be held liable for any damage which occurs as a result of non-observance or non-compliance with this manual.

Should the device be tampered with in any manner other than a procedure which is described and specified in the manual, the warranty is cancelled and the manufacturer is exempt from liability.

The device is destined exclusively for the described application.

SUTO offers no guarantee for the suitability for any other purpose. SUTO is also not liable for consequential damage resulting from the delivery, capability or use of this device.

Table of contents

1. Safety instructions....5
2. Application....7
3. Features....8
4. Technical Data....9
4.1 General....9
4.2 Electrical Data....10
4.3 Output-Signals....10
4.4 Accuracy 10
5. Dimensional drawing....12
6. Installation....13
6.1 Installation Requirements....13
6.2 Determination of the installation point....13
6.2.1 Inlet and outlet sections....14
6.2.2 Insertion angles....15
6.3 Calculating the insertion depth....16
6.3.1 Centre installation....16
6.3.2 Non-centre installation....17
6.4 Installation of the sensor 18
6.5 Performing the zero flow calibration....19
6.5.1 Prerequisites....19
6.5.2 Using the service App S4C-FS....19
6.5.3 Using the local display....21
6.6 Removing the sensor....21
6.7 Making electrical connection....22
7. Configuration....23
7.1 Description of sensor settings....23
7.1.1 Flow settings....23
7.1.2 Unit settings....24
7.1.3 Reference conditions....24
7.1.4 Factory settings....24
7.1.5 Output settings....24
7.1.6 Language setting....24
7.2 Configuration using the service App S4C-FS....25
7.3 Configuration using the optional sensor display....26
7.3.1 Starting process....26
7.3.2 About the home page....26
7.3.3 Configuration instructions....27
8. Sensor signal outputs....28
8.1 Analog output....28
8.2 Pulse output....28
8.3 Pulse Connection Diagram....30
8.4 Modbus output 30
8.5 M-Bus output 31

9. Calibration.....32
10. Maintenance.....32
11. Disposal or waste.....32
12. Warranty.....32
Appendix.....34

1. Safety instructions

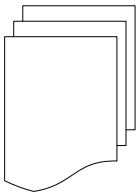

Please check if this instruction manual accords to the product type.

Please observe all notes and instructions indicated in this manual. It contains essential information which have to be observed before and during installation, operation and maintenance. Therefore this instruction manual has to be read carefully by the technician as well as by the responsible user / qualified personnel.

This instruction manual has to be available at the operation site of the flow sensor at any time. In case of any obscurities or questions, regarding this manual or the product, please contact the manufacturer.

WARNING!

Compressed air!

Any contact with quickly escaping air or bursting parts of the compressed air system can lead to serious injuries or even death!

- Do not exceed the maximum permitted pressure range (see sensors label).
- Only use pressure tight installation material.
- Avoid that persons get hit escaping air or bursting parts of the instrument.
- The system must be pressureless during maintenance work.

WARNING!

Voltage used for supply!

Any contact with energized parts of the product, may lead to a electrical shock which can lead to serious injuries or even death!

- Consider all regulations for electrical installations.
- The system must be disconnected from any power supply during maintenance work.
- Any electrical work on the system is only allowed by authorized qualified personal.

WARNING!

Permitted operating parameters!

Observe the permitted operating parameters, any operation exceeding this parameters can lead to malfunctions and may lead to damage on the instrument or the system.

- Do not exceed the permitted operating parameters.
- Make sure the product is operated in its permitted limitations.
- Do not exceed or undercut the permitted storage and operation temperature and pressure.
- The product should be maintained and calibrated frequently, at least annually.

General safety instructions

- It is not allowed to use the product in explosive areas.
- Please observe the national regulations before/during installation and operation.

Remarks

- It is not allowed to disassemble the product.
- Always use spanner to mount the product properly.

ATTENTION!

Measurement values can be affected by malfunction!

The product must be installed properly and frequently maintained, otherwise it may lead to wrong measurement values, which can lead to wrong results.

- Always observe the direction of the flow when installing the sensor. The direction is indicated on the housing.
- Do not exceed the maximum operation temperature at the sensors tip.
- Avoid condensation on the sensor element as this will affect the accuracy enormously.

Storage and transportation

- Make sure that the transportation temperature of the sensor without display is between -30°C ... 70°C and with display between -10°C ... 60°C.
- For transportation it is recommended to use the packaging which comes with the sensor.
- Please make sure that the storage temperature of the sensor is between -10°C ... 50°C.
- Avoid direct UV and solar radiation during storage.
- For the storage the humidity has to be <90%, no condensation.

2. Application

The S430 is a flow sensor which is designed to measure the consumption of compressed air and gases in wet air or high mass flow / velocity applications. The sensor can measure in wet and dirty gases as occurring, for example, at the outlet of a compressor.

The S430 can measure the following values:

- Velocity of the compressed air or gas.
- Volume flow of the compressed air or gas.
- Total consumption of the compressed air or gas.
- Pressure and Temperature of the compressed air or gas.

The default factory settings are: Velocity in m/s, Volume flow in m^3/h and Total Consumption in m^3, pressure in bar, temperature in °C. Other units can be programmed by the optional display or the service kit.

The S430 flow sensor is not developed to be used in explosive areas. For the use in explosive areas please contact the manufacturer.

The S430 flow sensor is mainly used in compressed air systems in industrial environment.

3. Features

- Flow and consumption measurement in wet air or high mass flow / velocity applications.
- Measurement at compressor outlet possible.
- Insertion type flow sensor for easy installations under pressure through a ball valve.
- High temperature application up to 200°C.
- Tube diameters from 1” up to 10”, larger diameters on request.
- No mechanical wear parts.
- All parts which are in contact with the medium are made of stainless steel.
- Optional display directly on the sensor, showing velocity, volume flow and consumption, temperature, pressure.

4. Technical Data

4.1 General

CE	
Parameters	Standard unit flow: m^3/h other units: m^3/min, l/min, cfm, kg/h, kg/min, kg/s Standard unit velocity: m/s Standard unit temperature: °C Standard unit pressure: bar
Reference conditions	ISO1217 20°C 1000 mbar (Standard-Unit) DIN1343 0°C 1013,25 mbar (Norm-Unit)
Principle of measurement	Pitot tube
Sensor	Differential pressure sensor
Measuring medium	Air, gas (non corrosive gas), steam
Operating temperature	-40 … 200°C probe tube -30 … 70°C housing 0 … 50°C display (optional)
Humidity of the meas. medium	< 90%, no condensation
Operating pressure	0 ... 1.6 MPa
Housing material	PC + ABS
Material of the probe tube, sensor head and the screwing	Stainless steel 1.4404
Protection class	IP65
Dimensions	See dimensional drawing on chapter 5
Display (optional)	2.4” colour graphics display with keypad (optional)
Tube diameter	1” to 10” (bigger diameters on request)
Screwing thread	G1/2” (ISO 228/1)
Weight	1.10 kg

4.2 Electrical Data

Power supply	24 VDC, 150 mA

4.3 Output-Signals

Analog output	Signal: 4 ... 20 mA Scaling: 0 to max. volume flow / velocity Accuracy: 0.06 mA
Pulse output	1 pulse per m^3, isolated switch, max. 30 VDC, 200 mA (active signal) (pulse length: 30 … 120 ms, depends on flow rate)
Modbus output (default setting)	See chapter 8.4
M-Bus output (default setting)	See chapter 8.5

4.4 Accuracy

Accuracy	Flow: ±(1.5% of reading+0.3% full scale) Pressure: 0.5% full scale Temperature: 0.5°C
Stated accuracy at	Ambient/process temperature 23°C ± 3°C Ambient/process humidity <90% Process pressure at 0.6 MPa

Working range:
Flow range for air at 6 barg, 50°C and 90% humidity. For other gas and condition please see appendix or download flow range software from the homepage of the manufacturer.

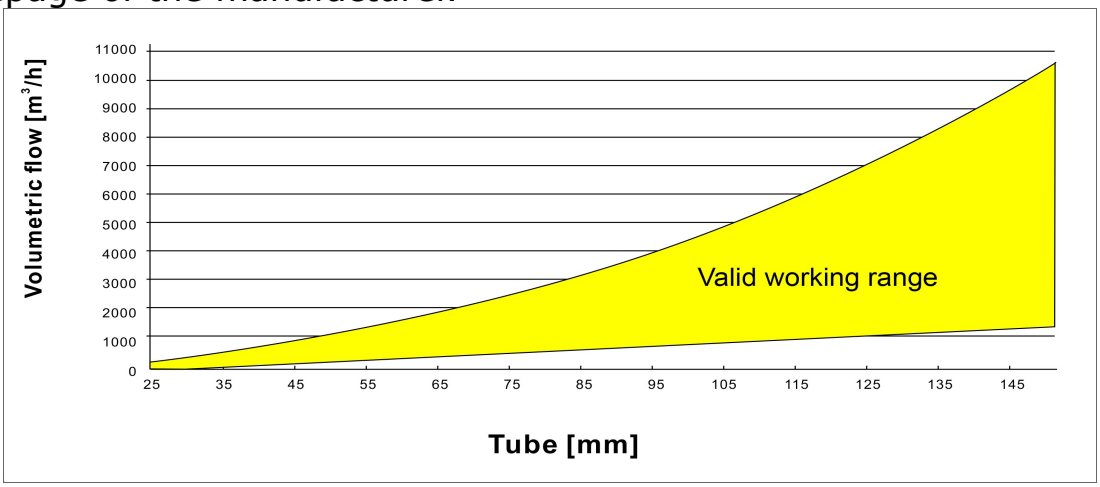

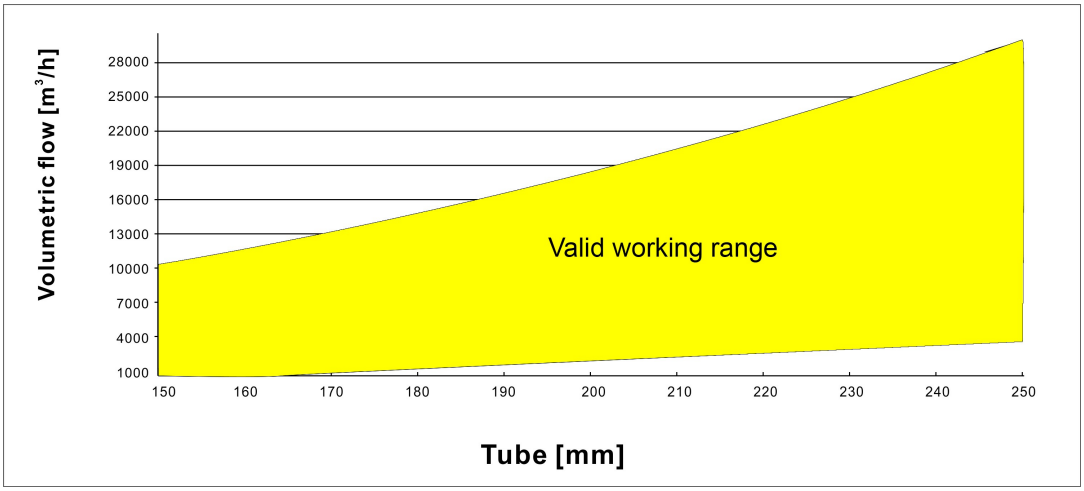

Cut-off flow of S430 is pressure depending. Following chart shows the relationship at tube of 100 mm, 50°C and 90% humidity. For other tube and conditions please download “Flow range” software from the homepage of the manufacturer.

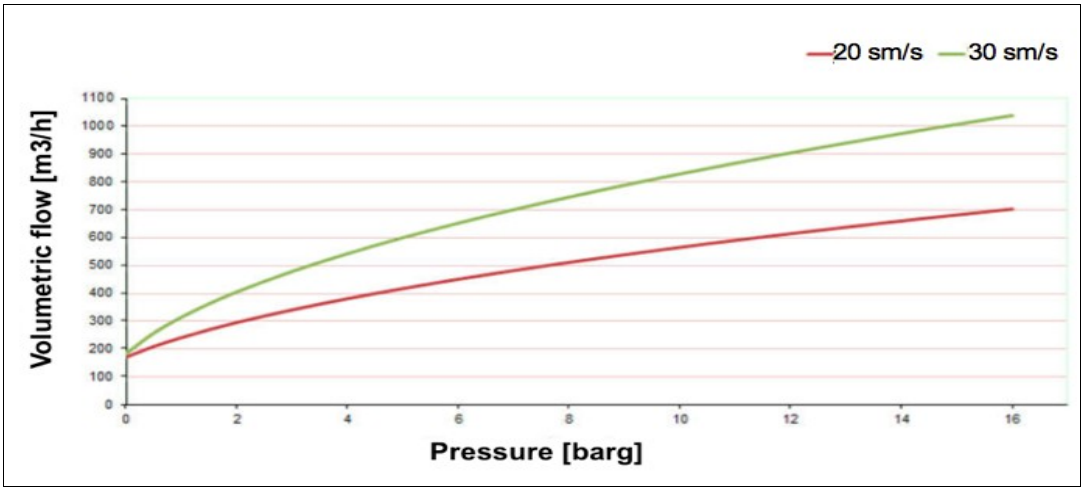

5. Dimensional drawing

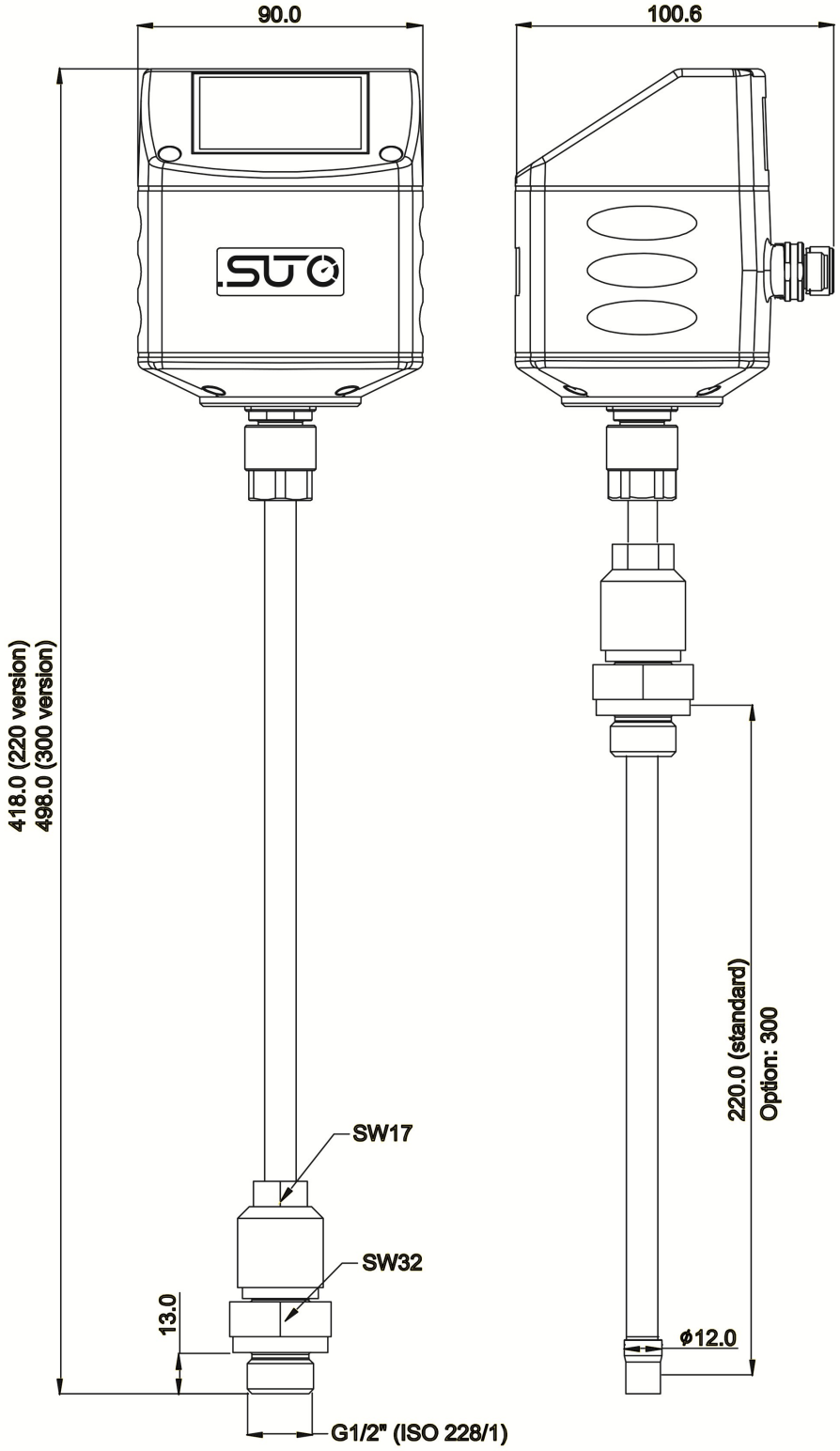

6. Installation

Before you install the sensor, make sure that all components listed below are included in your package.

Qty	Description	Item No.
1	S430 Sensor	S695 4300/S695 4302
1	Sealing ring	No P/N
1	Alignment key	No P/N
2	M12 plug	C219 0059
1	Instruction manual	No P/N
1	Calibration certificate	No P/N

6.1 Installation Requirements

To install the sensor a ball valve or a nozzle is needed.

- The inner thread has to be G 1/2”.
- The diameter of the hole must be ≥ 13mm, otherwise the shaft can not be inserted.8.2 Installation Procedure

6.2 Determination of the installation point

In order to maintain the accuracy stated in the technical data, the sensor must be insert in the centre of a straight pipe section with unhindered flow characteristics.

Remark

If the pipe diameter is higher than the maximum shaft length, it is possible to install the sensor out of centre of the pipe. For this please contact the manufacturer.

Unhindered flow characteristics are achieved if the section in front of the sensor (inlet) and behind the sensor (outlet) are sufficiently long, absolutely straight and free of obstructions such as edges, seams, curves etc..
Please consider that enough space exists at your site for a adequate installation as described in this manual.

ATTENTION!

Wrong measurement is possible, if the sensor is not installed correctly.

- Careful attention must be paid to the design of the inlet and outlet section. Obstructions can cause counter-flow turbulence as well as turbulence in the direction of the flow.
- The sensor is for indoor use only! At an outdoor installation, the sensor must be protected from solar radiation and rain.

6.2.1 Inlet and outlet sections

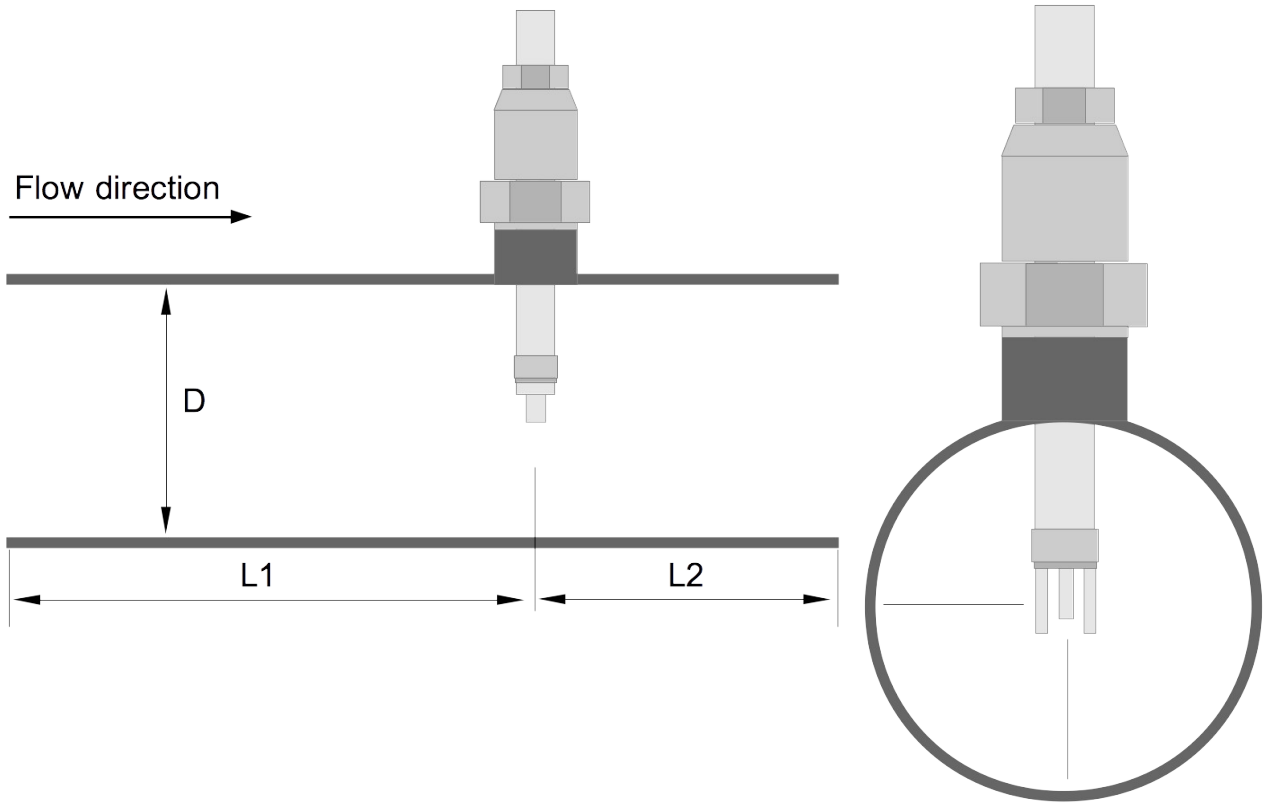

L1 : Length of inlet section

L2 : Length of outlet section

D : Diameter of tube

Please keep at least 8 x D upstream and 3 x D downstream to ensure an significant influence to the measuerement due to up and downstreampipe bends.

6.2.2 Insertion angles

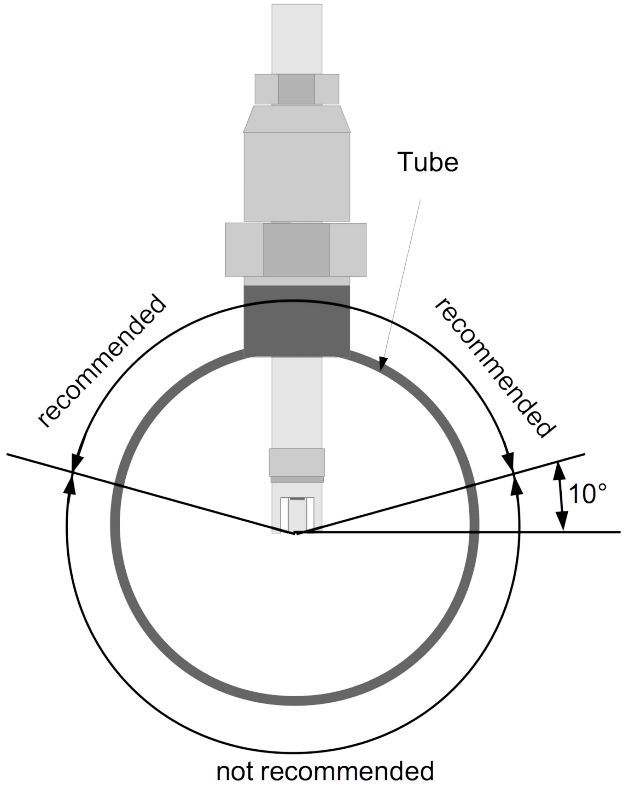	Please install the sensor only in the recommended area like you can see in the picture. A horizontal installation is not permitted. Please consider that the distance to the horizontal level must be >10°.
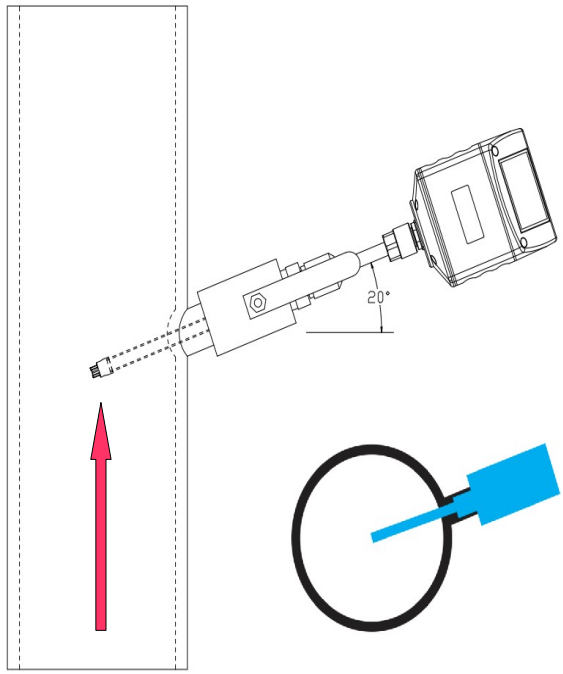	Installation in a vertical pipe is possible, required the flow is from bottom up and the sensor has at least a 10 degree angle (recommended is 20 degree). ATTENTION: Do not install in vertical pipes if the flow is from top to down.

6.3 Calculating the insertion depth

Generally, the sensor tip must be placed in the centre of the pipe. To facilitate this, the sensor is designed with a scale engraved on its shaft. To determine the right position, calculate the insertion depth as described below.

Note: If the pipe diameter is greater than the shaft length, it is feasible to install the sensor out of centre of the pipe. For more information, please contact the manufacturer.

6.3.1 Centre installation

Centre installation is the default and recommended installation type.

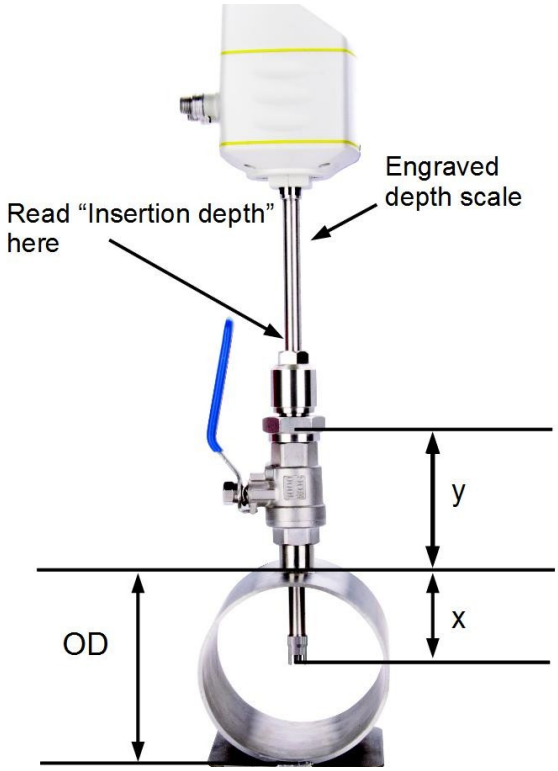

$$\textbf{Insertion depth} = x + y$$

$$x = \frac{OD}{2}\,;\; OD = \text{Outer diameter of pipe}$$

Example for a 2” pipe and a 87 mm ball valve:

$$y = 87\,\text{mm}\,;\; OD = 60.3\,\text{mm}$$

$$x = \frac{OD}{2} = \frac{60.3\,\text{mm}}{2} = 30.15\,\text{mm}$$

$$\textbf{Insertion depth} = 30.15\,\text{mm} + 87\,\text{mm} = 117.15\,\text{mm}$$

6.3.2 Non-centre installation

In bigger pipe diameter (> DN150) situations, the non-centre installation is applicable. In the non-centre installation, the sensor is inserted to exact 100 mm-depth of pipes.

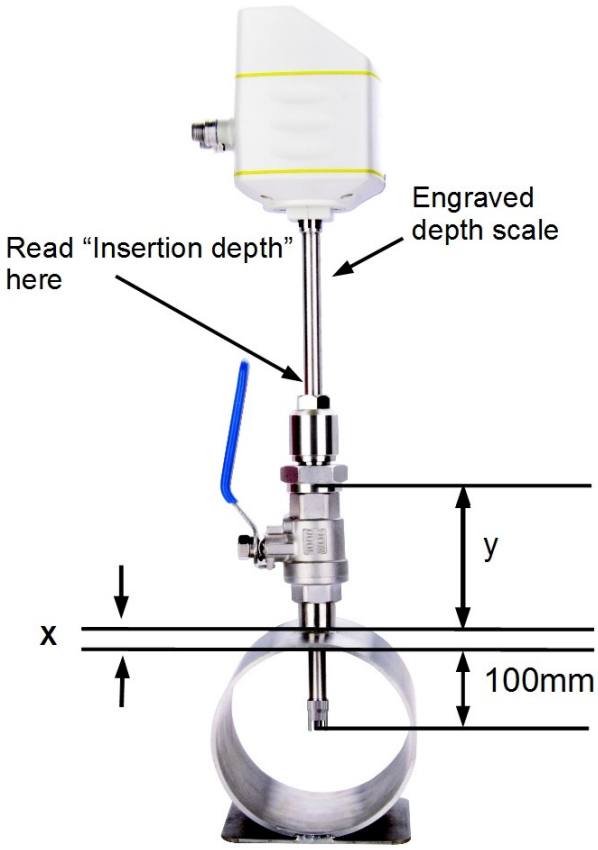

$$\textbf{Insertion depth} = x + y + 100$$

x is the wall thickness of pipes

Example for a 12” pipe, the wall thickness of pipes 9 mm and a 87 mm ball valve:

$x = 9\,\text{mm}\,;\ y = 87\,\text{mm}$

$$\textbf{Insertion depth} = 9\,\text{mm} + 87\,\text{mm} + 100\,\text{mm} = 196\,\text{mm}$$

6.4 Installation of the sensor

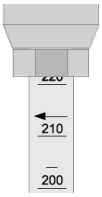

First please observe the flow direction indicated on the housing or on the shaft. It must match the flow direction of the compressed air or gas.

1. Ball valve has to be closed.
2. The sensor head has to be completely covered by the connection thread (see photo on the left).
3. Underlay the "O-ring" at the thread of the ball valve before screwing the flow sensor.
4. Screw the connection thread tightly to the ball valve and align flow sensor to flow direction.
5. Open ball valve and tighten clamp sleeve manually by hand.
6.Perform **zero flow calibration** (see picture on P21).
7. Move flow sensor slightly to the determined insertion depth by means of the scale.
8. Tighten the clamp sleeve at the connection thread so that the flow sensor can not longer be moved by the pressure in the pipe, however it should be possible to move the sensor shaft manually.
9. With the aid of the alignment key make sure that the actual flow direction is same as the arrow shows (the angle deviation should not be larger than ± 2° to the perfect position, please see picture on the next page).
10. Tighten clamp sleeve with clamping torque 20...30 Nm.
11. During the final check control the installation depth again because sometimes the shaft is moved from its original position due the compressed air.

Maximum angle deviation of a proper installation:

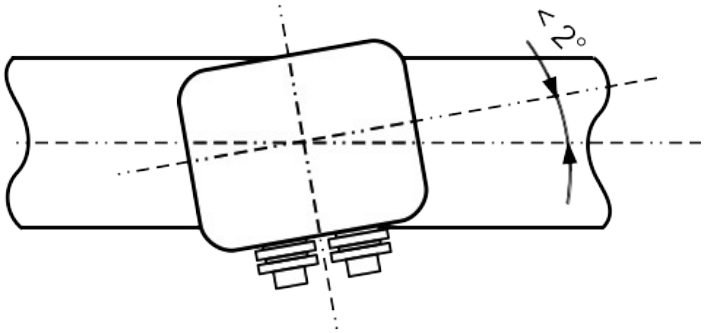

6.5 Performing the zero flow calibration

The zero flow calibration is a compulsory operation during the installation of the sensor. Use one of the following methods to perform the calibration:

- The service App S4C-FS, available on the Google Play store or our Website for free download
- The optional local display

6.5.1 Prerequisites

Before you start the calibration, make sure the following conditions are met:

- The sensor must have been mounted on top of the G 1/2" ball valve.
- The ball valve must be opened with the sensor tip outside of the pipe. That is, the sensor tip still remain inside the ball valve.

These ensure that the sensor is exposed to the system pressure during calibration.

6.5.2 Using the service App S4C-FS

This is the most convenient way especially when the sensor is not equipped with the optional local display.

1. On your mobile device, download the S4C-FS App from the **SUPPORT** > **Downloads** menu on https://suto-itec.com or from Google Play store as needed.
2. Turn on Bluetooth on your mobile device.
3. Launch the **S4C-FS** App.

Sensors that are within the reach of your Bluetooth signal while not connected with other S4C-FS Apps are displayed on the home screen.

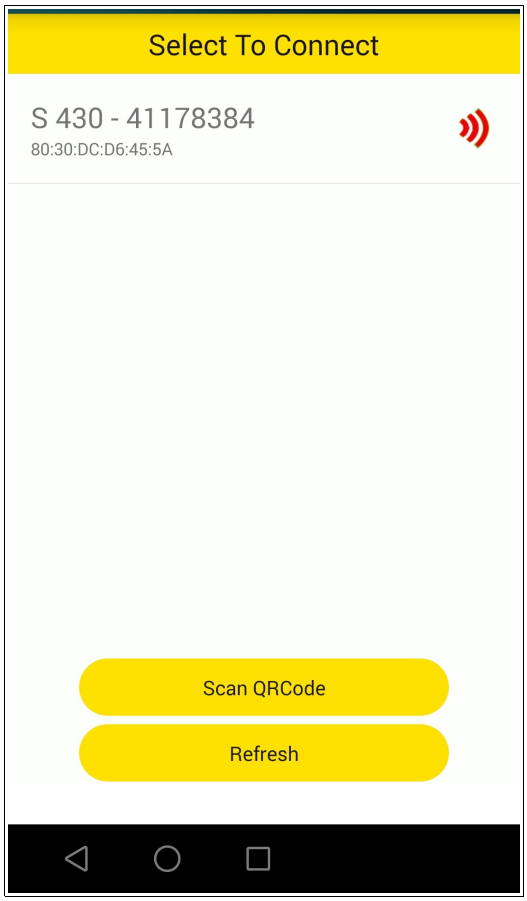

Note: A red Wireless Connection icon is displayed behind a connected sensor, which indicates that the sensor is successfullyconnected but accessible in the read-only mode. In this mode, you can only view the online parameter values and existing settings.

4. Click the **Scan QR Code** button, and then scan the QR code provided on the calibration certification.

   A green Wireless Connection icon is displayed indicating that the sensor is accessible in the editable mode.

   Note: Only through scanning the QR code can you edit system settings and perform calibrations.

5. Click the **System** icon.

   On the **System** screen that appears, click **Calibration** and follow the onscreen instructions to perform the zero flow calibration.

6.5.3 Using the local display

See steps 4 and 5 described in the following Figure 3.

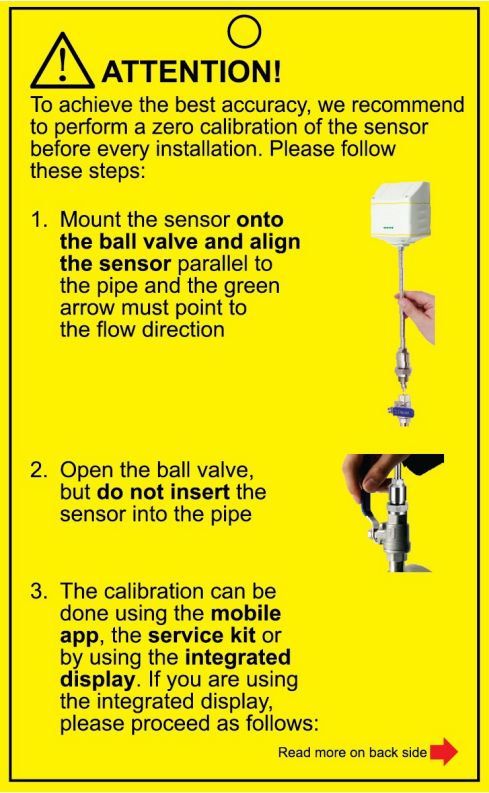

Figure 2: Steps to expose the sensor to the system pressure

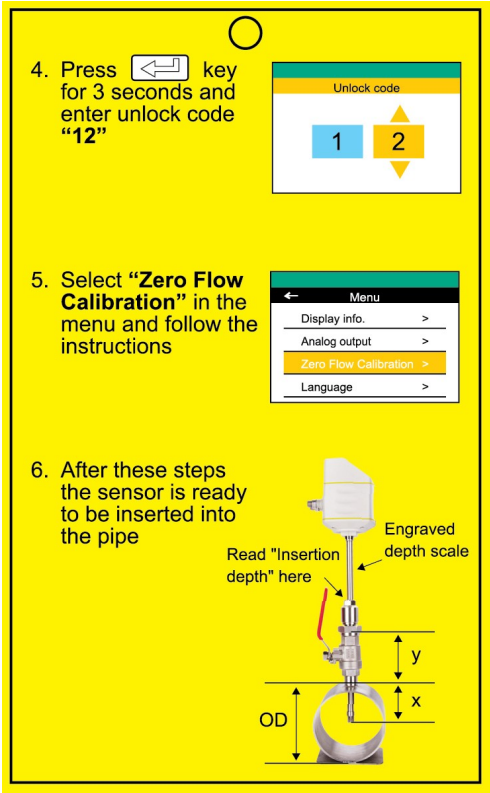

Figure 3: Steps to perform the zero flow calibration

6.6 Removing the sensor

WARNING!

The removal of sensors under pressure can be dangerous! Be aware that the sensor can be shot out of the ball valve if you do not carefully follow the steps described below!

For your information: The sensor is exposed to a force of 18 kg at the 8-barg system pressure; a force of 32 kg at 16-barg system pressure!! Hold the sensor very tight when releasing the clamp sleeve.

1. Hold the flow sensor firmly.
2. Release the clamp sleeve from the connection head very slowly while keeping your hand on the top of the sensor head.
3. Pull out the shaft slowly until the sensor is fully returned into the value.

4. Close the ball valve.
5. Unscrew the connection head and pull the flow sensor out of the ball valve.

6.7 Making electrical connection

The flow sensor is equipped with two connector plugs “A” and “B”. The cables are connected to the sensor through the M12 connector.

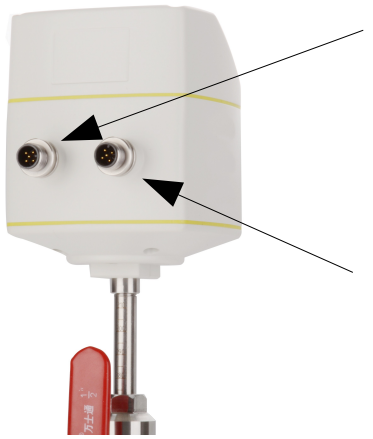

Connection pins connector plug M12

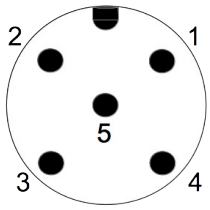

Connection pins
(view from the clamping side)

Pin assignment connector plug M12

Output Version	Connector	Pin 1	Pin 2	Pin 3	Pin 4	Pin 5
Modbus	A	SDI	-VB	+VB	N/A	N/A
	B	GND	-VB	+VB	+D	-D
Pulse and analog	A	SDI	-VB	+VB	N/A	N/A
	B	N/A	SW	SW	+I	-I
M-Bus	A	SDI	-VB	+VB	N/A	N/A
	B	N/A	-VB	+VB	M	M
Wire colour		brown	white	blue	black	grey

Legend to pin assignment

GND:	Ground for Modbus	SW:	Isolated pulse switch input/output
SDI:	Digital signal (internal use)	D+:	Modbus data +
-VB:	Negative supply voltage	D-:	Modbus data -
+VB:	Positive supply voltage	M:	M-Bus data
+I:	Positive 4 ... 20 mA signal	N/A:	Not applicable
-I:	Negative 4 ... 20 mA signal		

ATTENTION!

Do not screw the M12 plug using force. Otherwise, it may damage the connecting pins.

7. Configuration

After the installation is completed, change the sensor settings of your choice using the service App S4C-FS, local display (optional), or service kit (optional).

Note: You can also use these tools to view parameter values and error messages.

7.1 Description of sensor settings

Settings provided on S430 come into the following categories.

7.1.1 Flow settings

Parameter	Description
Pipe diameter	Enter the pipe diameter in the unit of mm.
Gas type	Select the gas type. To measure steam, select “steam” as the gas type.
Flow type	Make a selection from: • Flow: Total measured volumetric flow (air + moisture) at standard conditions as configured (for example, 20°C, 1000 hPa) • Dry Air Flow: Measured volumetric flow of air only at standard conditions as configured (for example, 20°C, 1000 hPa)

	• FAD: Free Air Delivery calculated based on the total measured volumetric flow at programmed intake conditions (for example, 25°C, 980 hPa, 30 %rH) • Working Condition Flow: Working volumetric Flow at fluid pressure and temperature.
Installation	Select an installation method • Center Installation • 100mm insertion depth

7.1.2 Unit settings

Configure units for flow, pressure, temperature, and consumption.

7.1.3 Reference conditions

View reference settings at standard condition and norm condition.Configure reference settings at the customer condition as needed.

7.1.4 Factory settings

Configure filter grade at the scale of 0 to 127.

7.1.5 Output settings

Configure output settings for Modbus such as the device address, Baud rate, Parity, and Stop bit

7.1.6 Language setting

Select the UI language.

7.2 Configuration using the service App S4C-FS

This is the most convenient way especially when the sensor is not equipped with the optional local display.

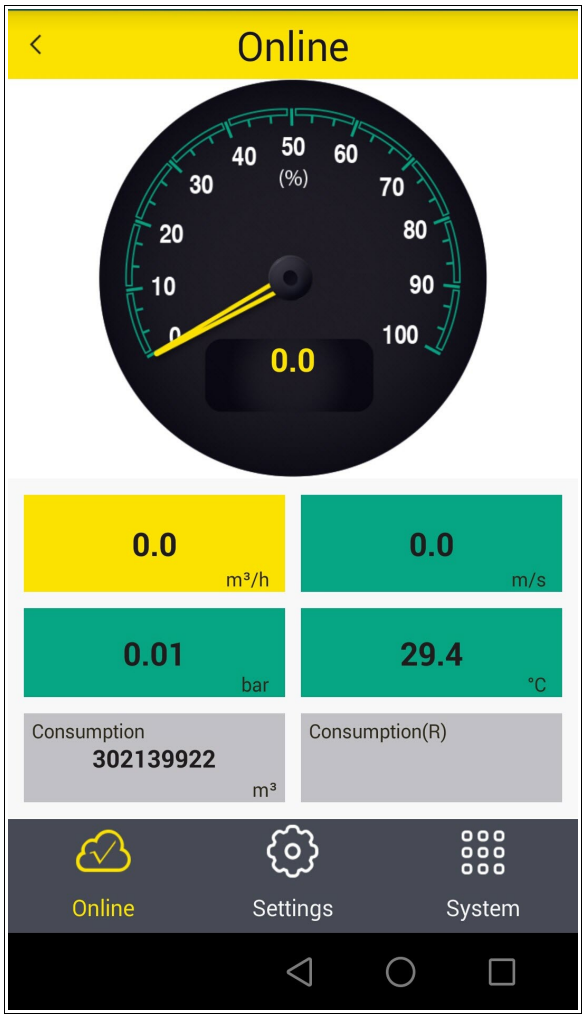

The App is available for Android systems. You can download the service App from the Google Play store or our Website.

To change settings using the App, you must scan the QR code on the calibration certificate. This ensures that only valid users can change the sensor settings.

For more detailed instructions, refer to steps described on page 20.

7.3 Configuration using the optional sensor display

With the Sensor display it is possible to show the value of the velocity, the flow and the consumption. Moreover it shows error messages and it is possible to change the configuration setting of the sensor.

"Enter key" =

"Up key" =

"Down key" =

7.3.1 Starting process

After power up, the display starts automatically with a initialisation procedure. During the next eight seconds the display will show the current software version and starts the connection to the sensor. Now the display goes to the standard mode, showing the online values, flow, velocity and pressure, alternately.

7.3.2 About the home page

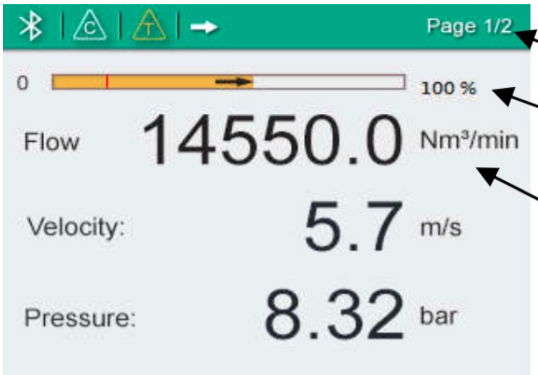

Home page:

- Status bar
- Moving bar to indicate flow and cut-off value
- Measuring values

Icons are shown in the status bar indicating status or warnings for the sensor in service. The following table provides descriptions for these icons.

Icon	Description
	Calibration expired
	Temperature over operating range
	Flows over measuring range
	Pressure over operating range
	Pressure sensor damaged
	Temperature sensor damaged
	Flow direction

7.3.3 Configuration instructions

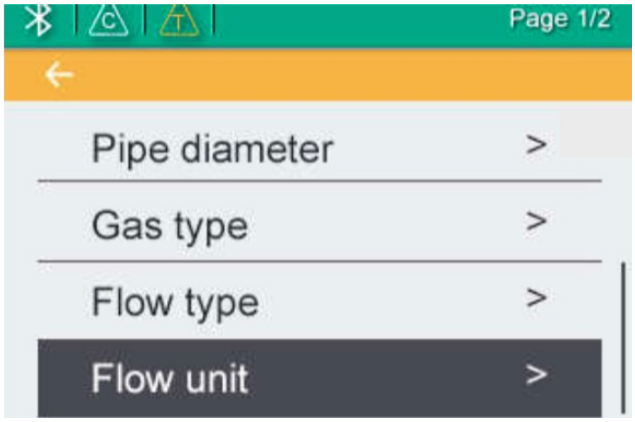

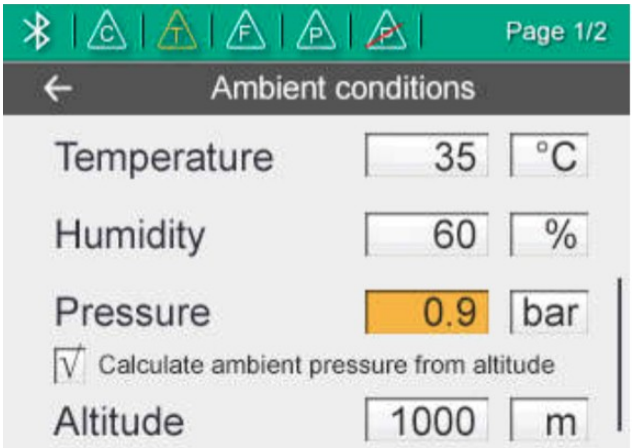

1. Press the **Enter** key (>3s).
2. Enter the unlock code:12 using the **Up** and **Down** keys, and then enter **Enter** key.
3. Use the **Up** and **Down** keys to choose the parameter that you want to change.
4. Use the **Up** and **Down** keys to select desired entry box or adjust the values.
5. Press the **Enter** key to confirm the changes.

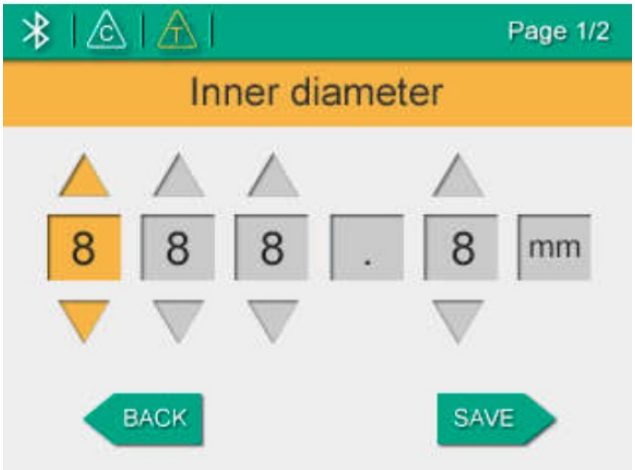

8. Sensor signal outputs

8.1 Analog output

The sensor has an analogue output range of 4...20 mA. This output can be scaled to match a desired measuring range. Standard is the range from 0 to max. flow depending on the pipe diameter. The corresponding flow in different pipe sizes can be found in the Appendix section. For other ranges, please contact the manufacturer.

8.2 Pulse output

The sensor will send out one pulse per consumption unit. This pulse output can be connected to an external pulse counter to count the total consumption. The number of m^3 per second are summed up and indicated after one second. Pulse length depends on consumption rate.

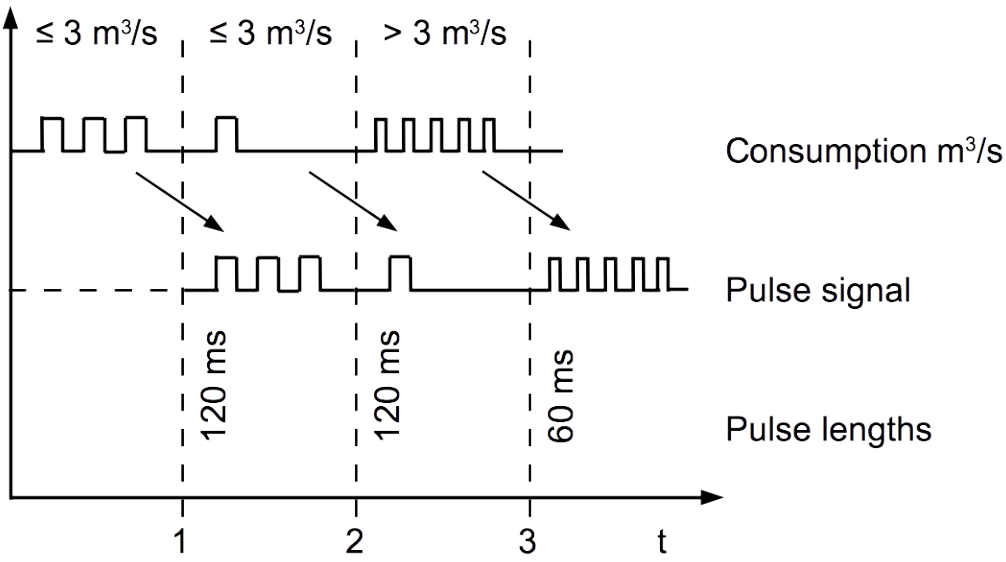

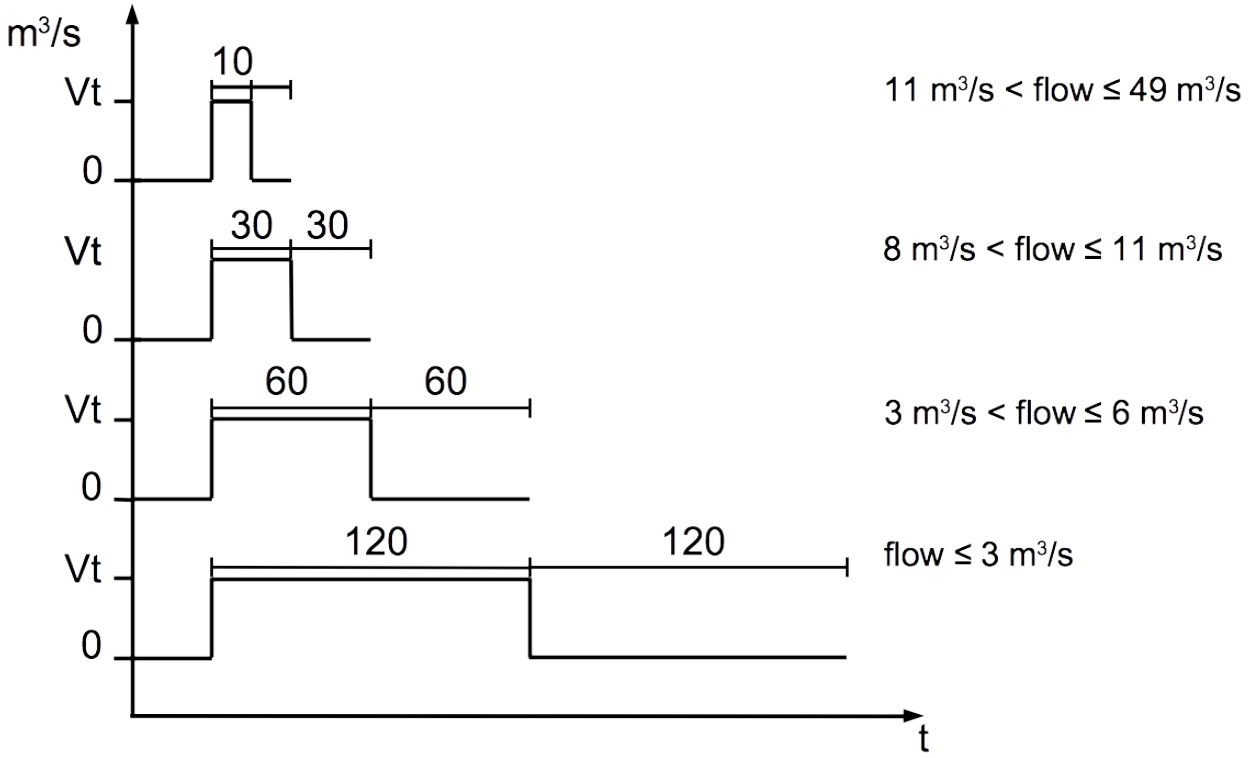

In case the flow rate is higher than 50 m^3/s, l/s of ft^3/s, the S430 can not output the pulses with default settings (one pulse per consumption unit). For this the pulse can be set by our service software or a connected display to 1 pulse per 10 consumption units or 1 pulse per 100 consumption units. For example, if set to 1 pulse per 10 m^3, the sensor will send one pulse each 10 m^3.

Example:

Volume flow [m^3/h]	Pulse length [ms]	Max. consumption [m^3]
≦ 10800	120	10800
> 10800	60	28800
> 28800	30	57600

8.3 Pulse Connection Diagram

Using the isolated pulse switch (Connector B Pin 4 and 5)

Variant 1:

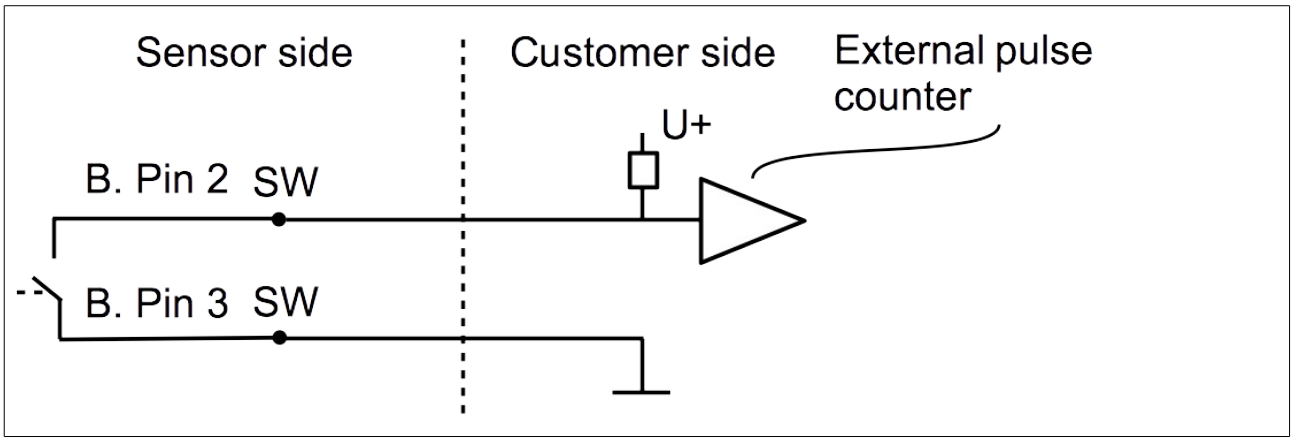

Variant 2:

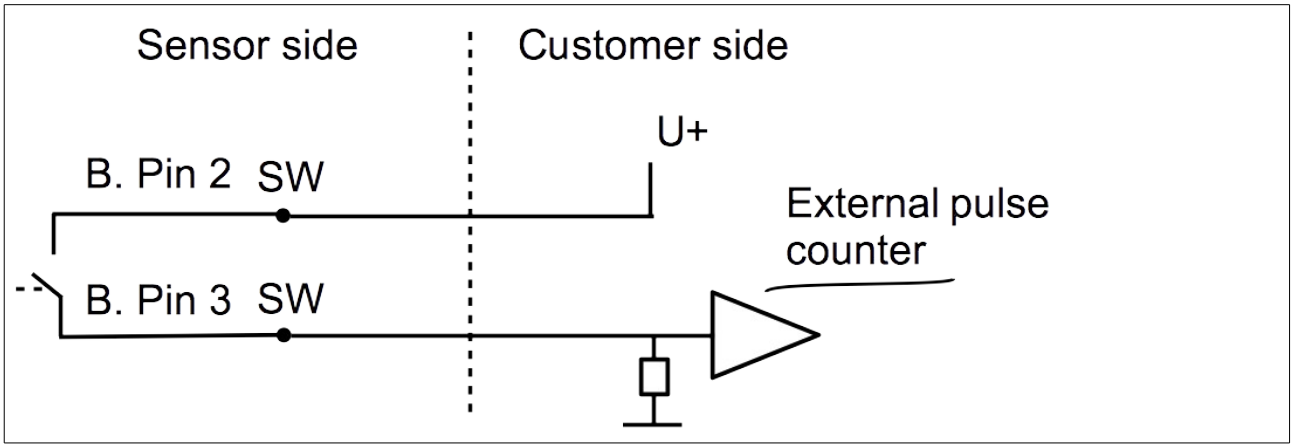

8.4 Modbus output

Mode	:	RTU
Baud rate	:	19200
Device address	:	1
Framing / parity / stop bit	:	8, E, 1
Response time	:	1 second
Response delay	:	0 ms
Inter-frame spacing	:	7 char

Remarks

- Modbus communication settings can be changed by the service software.

Index	Channel description	Unit	Resolution	Format	Length	Modbus address
0	Gas temperature	°C	0.1	FLOAT	4 Byte	0
1	Pressure	bar	0.001	FLOAT	4 Byte	2
2	Velocity	m/s	0.1	FLOAT	4 Byte	4
3	Flow	m^3/h	0.1	FLOAT	4 Byte	6
4	Consumption	m^3	1.0	UNIT32	4 Byte	8
5	Reverse velocity	m/s	0.1	FLOAT	4 Byte	10
6	Reverse flow	m^3/h	0.1	FLOAT	4 Byte	12
7	Reverse consumption	m^3	1.0	UNIT32	4 Byte	14
8	System status		1.0	UNIT32	4 Byte	24

Remark

- all numbers are in little-endian format.

8.5 M-Bus output

Manufacturer code / Fabrication No.	: 0x15C4 / serial number
Baud rate / parity	: 2400 bps / even
Device address	: primary address: 1; secondary address: serial number
Response delay / timeout	: 7ms / 500ms

Channel	Data information Field (DIF)	Unit	Range coding
Counter	04	m^3	1
Flow	04	m^3/h	10

9. Calibration

The sensor is calibrated ex work. The exact calibration date is printed on the certificate which is supplied together with the sensor. The accuracy of the sensor is regulated by the on site conditions, parameters like oil, high humidity or other impurities can affect the calibration and furthermore the accuracy. However we recommend to calibrate the instrument at least once per year. The calibration is excluded from the instruments warranty.For this please contact the manufacturer.

10. Maintenance

To clean the sensor it is recommended to use distilled water or isopropyl alcohol only. If the contamination can not be removed the sensor has to be inspected and maintained by the manufacturer.

11. Disposal or waste

Electronic devices are recyclable material and do not belong in the household waste.
The device, the accessories and its packings must be disposed according to your local statutory requirements.
The dispose can also be carried by the manufacturer of the product. Please contact the manufacturer for details.

12. Warranty

SUTO provides a warranty for this product of 24 months covering the material and workmanship under the stated operating conditions from the date of delivery. Please report any findings immediately and within the warranty time. If faults occur during the warranty time SUTO will repair or replace the defective unit, without charge for labour and material costs but there is a charge for other service such as transport and packing costs.
Excluded from this warranty is:

- Damage caused by:
  - Improper use and non-adherence to the instruction manual.
  - Use of unsuitable accessories.
  - External influences (e.g. damage caused by vibration, damage during transportation, excess heat or moisture).

The warranty is cancelled:

- If the user opens the measurement instrument without a direct request written in this instruction manual.
- If repairs or modifications are undertaken by third parties or unauthorised persons.
- If the serial number has been changed, damaged or removed.

Other claims, especially those for damage occurring outside the instrument are not included unless responsibility is legally binding.

Warranty repairs do not extend the period of warranty.

ATTENTION!

Batteries have a reduced warranty time of 12 month.

Appendix

Scaling table analogue output (standard range):

Medium: Air at ISO 1217; 20°C; 1000mbar

Tube			Flow							
inch	**PLF**	**mm**	**m³/h**	**m³/min**	**l/min**	**l/s**	**cfm**	**kg/h**	**kg/min**	**kg/s**
1/2”	0.671	**16.10**	98.36	1.64	1639.3	27.32	57.9	116.8	1.95	0.03
3/4”	0.722	**21.70**	192.26	3.20	3204.3	53.40	113.2	228.4	3.81	0.06
1”	0.746	**25.00**	263.66	4.39	4394.3	73.24	155.2	313.2	5.22	0.09
	0.750	**26.00**	286.70	4.78	4778.4	79.64	168.7	340.5	5.68	0.09
	0.756	**27.30**	318.62	5.31	5310.3	88.50	187.5	378.4	6.31	0.11
	0.761	**28.50**	349.54	5.83	5825.7	97.09	205.7	415.2	6.92	0.12
	0.767	**30.00**	390.36	6.51	6505.9	108.43	229.8	463.7	7.73	0.13
1 1/4”	0.776	**32.80**	472.10	7.87	7868.3	131.14	277.9	560.7	9.35	0.16
	0.784	**36.00**	574.57	9.58	9576.2	159.60	338.2	682.5	11.37	0.19
	0.785	**36.30**	584.93	9.75	9748.9	162.48	344.3	694.8	11.58	0.19
1 1/2”	0.792	**39.30**	691.72	11.53	11528.7	192.15	407.1	821.6	13.69	0.23
	0.793	**40.00**	717.49	11.96	11958.2	199.30	422.3	852.2	14.20	0.24
	0.797	**41.80**	787.47	13.12	13124.5	218.74	463.5	935.3	15.59	0.26
	0.800	**43.10**	840.36	14.01	14006.0	233.43	494.6	998.2	16.64	0.28
	0.804	**45.80**	953.69	15.89	15894.9	264.92	561.3	1132.8	18.88	0.31
2”	0.810	**50.00**	1145.11	19.09	19085.2	318.09	674.0	1360.1	22.67	0.38
	0.811	**51.20**	1202.22	20.04	20037.0	333.95	707.6	1428.0	23.80	0.40
	0.812	**53.10**	1294.69	21.58	21578.2	359.64	762.0	1537.8	25.63	0.43
	0.813	**54.50**	1365.54	22.76	22759.1	379.32	803.7	1622.0	27.03	0.45
	0.818	**57.50**	1529.37	25.49	25489.4	424.82	900.2	1816.5	30.28	0.50
	0.820	**60.00**	1669.32	27.82	27821.9	463.70	982.5	1982.8	33.05	0.55
	0.823	**64.20**	1918.19	31.97	31969.9	532.83	1129.0	2278.4	37.97	0.63
2 1/2”	0.824	**65.00**	1968.69	32.81	32811.4	546.86	1158.7	2338.3	38.97	0.65
	0.825	**68.90**	2214.70	36.91	36911.7	615.19	1303.5	2630.6	43.84	0.73
	0.827	**70.30**	2311.21	38.52	38520.1	642.00	1360.3	2745.2	45.75	0.76
	0.827	**71.10**	2364.11	39.40	39401.8	656.70	1391.5	2808.0	46.80	0.78
	0.829	**76.10**	2714.85	45.25	45247.5	754.13	1597.9	3224.6	53.74	0.90
3”	0.830	**80.00**	3003.87	50.06	50064.4	834.41	1768.0	3567.9	59.46	0.99
	0.831	**82.50**	3198.39	53.31	53306.5	888.44	1882.5	3798.9	63.32	1.06
	0.831	**84.90**	3387.18	56.45	56453.1	940.88	1993.6	4023.2	67.05	1.12
	0.832	**90.00**	3810.93	63.52	63515.5	1058.59	2243.0	4526.5	75.44	1.26
4”	0.833	**100.00**	4710.50	78.51	78508.4	1308.47	2772.5	5595.0	93.25	1.55
	0.834	**107.10**	5409.63	90.16	90160.5	1502.67	3184.0	6425.4	107.09	1.78
	0.834	**110.00**	5706.55	95.11	95109.2	1585.15	3358.8	6778.1	112.97	1.88
5”	0.835	**125.00**	7377.83	122.96	122963.9	2049.40	4342.4	8763.2	146.05	2.43
	0.835	**133.70**	8440.57	140.68	140676.1	2344.60	4967.9	10025.4	167.09	2.78
6”	0.836	**150.00**	10636.80	177.28	177280.1	2954.67	6260.6	12634.1	210.57	3.51
	0.836	**159.30**	11996.66	199.94	199944.3	3332.40	7061.0	14249.3	237.49	3.96
	0.837	**182.50**	15764.26	262.74	262737.7	4378.96	9278.5	18724.3	312.07	5.20
	0.837	**190.00**	17086.58	284.78	284776.3	4746.27	10056.8	20294.9	338.25	5.64
8”	0.838	**200.00**	18955.11	315.92	315918.6	5265.31	11156.6	22514.3	375.24	6.25
	0.838	**206.50**	20207.22	336.79	336787.0	5613.12	11893.5	24001.5	400.03	6.67
10”	0.839	**250.00**	29652.71	494.21	494211.8	8236.86	17452.9	35220.6	587.01	9.78
	0.840	**260.40**	32209.47	536.82	536824.6	8947.08	18957.8	38257.4	637.62	10.63
12”	0.840	**300.00**	42750.79	712.51	712513.2	11875.22	25162.2	50778.1	846.30	14.11
	0.840	**309.70**	45560.04	759.33	759334.0	12655.57	26815.6	54114.8	901.91	15.03
	0.840	**339.60**	54781.89	913.03	913031.5	15217.19	32243.4	65068.2	1084.47	18.07
	0.840	**400.00**	76001.41	1266.69	1266690.2	21111.50	44732.8	90272.1	1504.54	25.08
	0.840	**500.00**	118752.20	1979.20	1979203.4	32986.72	69894.9	141050.2	2350.84	39.18
	0.840	**600.00**	171003.17	2850.05	2850052.9	47500.88	100648.7	203112.3	3385.20	56.42
	0.840	**700.00**	232754.32	3879.24	3879238.6	64653.98	136994.1	276458.4	4607.64	76.79
	0.840	**800.00**	304005.64	5066.76	5066760.6	84446.01	178931.0	361088.5	6018.14	100.30
	0.840	**900.00**	384757.14	6412.62	6412618.9	106876.98	226459.6	457002.6	7616.71	126.95
	0.840	**1000.00**	475008.81	7916.81	7916813.5	131946.89	279579.7	564200.8	9403.35	156.72

FCC Statement:

This device complies with part 15 of the FCC rules Operation is subject to the following two conditions: (1) this device may not cause harmful interference, and (2) this device must accept any interference received, including interference that may cause undesired operation.

NOTE: The manufacturer is not responsible for any radio or TV interference caused by unauthorized modifications to this equipment. Such modifications could void the user's authority to operate the equipment.

NOTE: This equipment has been tested and found to comply with the limits for a Class B digital device, pursuant to part 15 of the FCC Rules. These limits are designed to provide reasonable protection against harmful interference in a residential installation. This equipment generates uses and can radiate radio frequency energy and, if not installed and used in accordance with the instructions, may cause harmful interference to radio communications. However, there is no guarantee that interference will not occur in a particular installation. If this equipment does cause harmful interference to radio or television reception, which can be determined by turning the equipment off and on, the user is encouraged to try to correct the interference by one or more of the following measures:

- Reorient or relocate the receiving antenna.
- Increase the separation between the equipment and receiver.
-Connect the equipment into an outlet on a circuit different from that to which the receiver is connected.
-Consult the dealer or an experienced radio/TV technician for help
− This device and its antenna(s) must not be co-located or operating in conjunction with any other antenna or transmitter.

RF Exposure Information and Statement :

This equipment complies with FCC radiation exposure limits set forth for an uncontrolled environment. This equipment should be installed and operated with minimum distance of 20 cm between the radiator and your body. This transmitter must not be co-located or operating in conjunction with any other antenna or transmitter

SUTO iTEC GmbH

Werkstr. 2
79426 Buggingen
Germany

Tel: +49 (0) 7631 936889-0
Fax: +49 (0) 7631 936889-19
Email: sales@suto-itec.com
Website: http://www.suto-itec.com

SUTO iTEC (ASIA) Co., Ltd.

Room 10, 6/F, Block B, Cambridge Plaza
188 San Wan Road, Sheung Shui, N.T.
Hong Kong

Tel: +852 2328 9782
Fax: +852 2671 3863
Email: sales@suto-itec.asia
Website: http://www.suto-itec.com

All rights reserved ©

Modifications and errors reserved.

S430_1_2G_im_en_2019-1

S/W Download